MIAMI-DADE COUNTY
BUILDING CODE COMPLIANCE OFFICE (BCCO)
PRODUCT CONTROL DIVISION

MIAMI-DADE COUNTY, FLORIDA
METRO-DADE FLAGLER BUILDING

140 WEST FLAGLER STREET, SUITE 1603
MIAMI, FLORIDA 33130-1563
(305) 375-2901 FAX (305) 375-2908
www.miamidade.gov

NOTICE OF ACCEPTANCE (NOA)

Eastern Metal Supply, Inc.
3600 23rd Avenue South
Lake Worth, Florida 33461

SCOPE:
This NOA is being issued under the applicable rules and regulations governing the use of construction materials. The documentation submitted has been reviewed by Miami-Dade County Product Control Division and accepted by the Board of Rules and Appeals (BORA) to be used in Miami Dade County and other areas where allowed by the Authority Having Jurisdiction (AHJ).

This NOA shall not be valid after the expiration date stated below. The Miami-Dade County Product Control Division (In Miami Dade County) and/or the AHJ (in areas other than Miami Dade County) reserve the right to have this product or material tested for quality assurance purposes. If this product or material fails to perform in the accepted manner, the manufacturer will incur the expense of such testing and the AHJ may immediately revoke, modify, or suspend the use of such product or material within their jurisdiction. BORA reserves the right to revoke this acceptance, if it is determined by Miami-Dade County Product Control Division that this product or material fails to meet the requirements of the applicable building code.

This product is approved as described herein, and has been designed to comply with the High Velocity Hurricane Zone of the Florida Building Code.

DESCRIPTION: " Bertha HV " Aluminum Accordion Shutter System

APPROVAL DOCUMENT: Drawing No. 07-195, titled " Bertha HV Accordion Shutter System ", sheets 1 through 26 of 26, prepared by Tilteco, Inc., dated July 19, 2007, signed and sealed by Walter A. Tillit Jr., P.E., on July 20, 2007, bearing the Miami-Dade County Product Control Approval stamp with the Notice of Acceptance number and the approval date by the Miami-Dade County Product Control Division.

MISSILE IMPACT RATING: Large and Small Missile Impact

LABELING: Each unit shall bear a permanent label with the manufacturer's name or logo, city, state and the following statement: "Miami-Dade County Product Control Approved", unless otherwise noted herein.

RENEWAL of this NOA shall be considered after a renewal application has been filed and there has been no change in the applicable building code negatively affecting the performance of this product.

TERMINATION of this NOA will occur after the expiration date or if there has been a revision or change in the materials, use, and/or manufacture of the product or process. Misuse of this NOA as an endorsement of any product, for sales, advertising or any other purposes shall automatically terminate this NOA. Failure to comply with any section of this NOA shall be cause for termination and removal of NOA.

ADVERTISEMENT: The NOA number preceded by the words Miami-Dade County, Florida, and followed by the expiration date may be displayed in advertising literature. If any portion of the NOA is displayed, then it shall be done in its entirety.

INSPECTION: A copy of this entire NOA shall be provided to the user by the manufacturer or its distributors and shall be available for inspection at the job site at the request of the Building Official.

This NOA consists of this page 1, evidence submitted page E-1 as well as approval document mentioned above. The submitted documentation was reviewed by **Helmy A. Makar, P.E., M.S.**

MIAMI-DADE COUNTY APPROVED

Helmy A. Makar
02/28/2008

NOA No. 07-0817.09
Expiration Date: 02/28/2013
Approval Date: 02/28/2008

Eastern Metal Supply, Inc.

NOTICE OF ACCEPTANCE: EVIDENCE SUBMITTED

A. DRAWINGS

1. *Drawing No. 07-195, titled " Bertha HV Accordion Shutter System ", sheets 1 through 26 of 26, prepared by Tilteco, Inc., dated July 19, 2007, signed and sealed by Walter A. Tillit Jr., P.E., on July 20, 2007.*

B. TESTS

1. *See Association's generic approval under 06-0130.*

C. CALCULATIONS

1. *See Association's generic approval under 06-0130.*

D. QUALITY ASSURANCE

1. *By Miami-Dade County Building Code Compliance Office.*

E. MATERIAL CERTIFICATIONS

1. *See Association's generic approval under 06-0130.*

F. STATEMENTS

1. *Release letter issued by the American Shutter Systems Association, Inc., dated July 25, 2007, certifying this product to meet the criteria of product tested and approved, and allowing Eastern Metal Supply, Inc. to use the test results approved under Miami-Dade County Approval No. 06-0130, signed by Legny Rodriguez.*
2. *Acknowledgment letter by Eastern Metal Supply, Inc., dated August 06, 2007, signed by Mr. Craig Lightle.*
3. *Letter by Tilteco Inc., dated July 20, 2007, certifying that the drawing (No. 07-195) prepared for Eastern Metal Supply, Inc., signed and sealed by Mr. Walter A. Tillit Jr., P.E., is engineering wise identical to ASSA's generic drawing (No. 05-363).*

Helmy A. Makar, P.E., M.S.
Product Control Examiner
NOA No. 07-0817.09
Expiration Date: 02/28/2013
Approval Date: 02/28/2008

GENERAL NOTES:

1. BERTHA H.V. ACCORDION SHUTTER SYSTEM SHOWN ON THIS PRODUCT APPROVAL DOCUMENT (P.A.D.) HAS BEEN VERIFIED FOR COMPLIANCE IN ACCORDANCE WITH THE 2004 EDITION OF THE FLORIDA BUILDING CODE WITH THE 2005 SUPPLEMENTS.
THIS ACCORDION SHUTTER SYSTEM MAY BE INSTALLED AT HIGH VELOCITY HURRICANE ZONES. DESIGN WIND LOADS SHALL BE DETERMINED AS PER SECTION 1620 OF THE ABOVE MENTIONED CODE. IN ORDER TO VERIFY THAT ANCHORS ON THIS P.A.D. AS TESTED, WERE NOT OVERSTRESSED, A 33% INCREASE IN ALLOWABLE LOADS FOR WIND LOADS WAS NOT USED IN THEIR ANALYSIS. BERTHA H.V. ACCORDION SHUTTER SYSTEM'S ADEQUACY FOR WIND AND LARGE MISSILE IMPACT LOAD HAS BEEN VERIFIED IN ACCORDANCE WITH SECTION 1609.1.4 OF THE ABOVE MENTIONED CODE AS PER ATL REPORTS:
-HV **BLADE** ① #0214.01-03, #0715.01-03, #1004.01-05, #1214.01-05 AND 0317.02-06 AS PER TAS-201, TAS-202 AND TAS-203 PROTOCOLS,
-HV **BLADE** ② #0422.01-05 AS PER TAS-201, TAS-202 AND TAS-203 PROTOCOLS.

2. HV BLADE ① AND HV BLADE ② ARE ENGINEERED TO WORK IN UNISON WITH EACH OTHER IN AREAS WHERE THE DESIGN PRESSURES TRANSITION FROM END ZONE 5 TO INTERIOR ZONE 4. EACH WIND ZONE MUST BE CLEARLY IDENTIFIED IN ACCORDANCE WITH SECTION 6, OF ASCE 7-02 STANDARD. ALL MOUNTING CONDITIONS AND FASTENER TYPES SCHEDULES MUST BE APPLIED TO THE CORRESPONDING WIND ZONE. THIS SHALL INCLUDE REQUIREMENTS FOR MIN. SEPARATION TO GLASS. DELIMITATION OF WIND ZONES 4 AND 5 AS WELL AS VALIDITY OF COMPONENTS FOR HV BLADE 1 & 2 ACCORDION SHUTTERS SYSTEMS FOR EITHER WIND ZONE SHALL BE PREPARED AND CERTIFIED BY A FLORIDA REGISTERED ENGINEER OR ARCHITECT BASED ON BUILDING CONFIGURATION AND ASCE 7-02 STANDARD, AND SHALL BE SUBMITTED TO THE BUILDING OFFICIAL AT THE TIME PERMIT IS APPLIED FOR.

3. BERTHA H.V. ACCORDION PINS (HV SCREWS), USED AT BLADES KNUCKLE AND FOR DIRECT MOUNT CONNECTION TO TRACKS SHALL BE # 14X2.75 AND # 14X1.75 RESPECTIVELY, 410-HT MINIMUM SERIES STAINLESS STEEL SCREWS WITH 135.0 ksi YIELD STRENGTH AND 180 ksi TENSILE STRENGTH. PINS SHALL BE COATED WITH BERTHA HV DACROSHIELD COATING SYSTEM AS MANUFACTURED BY APPROVED COATING APPLICATORS, REGISTERED WITH AMERICAN SHUTTER SYSTEMS ASSOCIATION. PINS MUST BEAR THE HV MARKING ON THEIR HEAD.

4. ALL ALUMINUM EXTRUSIONS SHALL BE ALUMINUM ASSOCIATION ALLOY AND TEMPER AS INDICATED ON SHEETS 2 AND 3. MINIMUM YIELD STRENGTH FOR 6063-T6 ALLOY IS 30.0 ksi AND 35.7 ksi FOR 6005-T5 ALLOY.

5. ALL SCREWS TO BE STAINLESS STEEL 304 OR 316 AISI SERIES OR CORROSION RESISTANT COATED CARBON STEEL AS PER DIN 50018 WITH 50 ksi MIN. YIELD STRENGTH AND 90 ksi MIN. TENSILE STRENGTH.

6. BOLTS TO BE ASTM A-307 GALVANIZED STEEL, OR AISI 304 OR 316 SERIES STAINLESS STEEL WITH 35 ksi MINIMUM YIELD STRENGTH.

7. SEE THE FOLLOWING SHEETS FOR ANCHOR SPECIFICATIONS: HV **BLADE** ① : 13,14,15,16 AND 17
HV **BLADE** ② : 26.

8. THIS BERTHA H.V. ACCORDION SHUTTER SYSTEM BEARS A U.S. PATENT #6'779,582. COMPONENTS OF THIS APPROVAL ARE COVERED, IN WHOLE OR IN PART BY U.S. PATENT #5'458,179 ISSUED TO EASTERN METAL SUPPLY, INC.

9. IT SHALL BE THE RESPONSIBILITY OF THE CONTRACTOR TO VERIFY THE SOUNDNESS OF THE STRUCTURE WHERE SHUTTER IS TO BE ATTACHED TO INSURE PROPER ANCHORAGE. CONTRACTOR TO SEAL/CAULK ALL SHUTTER COMPONENT EDGES WHICH REMAIN, THRU FASTENING IN CONTINUOUS CONTACT WITH THE BUILDING TO PREVENT WIND/RAIN INTRUSION.

10. EACH UNIT MUST BEAR PERMANENT LABEL IN A VISIBLE PLACE WITH WARNING NOTE: DURING PERIODS OF HURRICANE WARNINGS HOME OWNER, TENANT, OR OTHERS, MUST PROPERLY CLOSE ALL HV AND HD CENTERMATES AND ENGAGE OR LOCK ALL HV AND HD LOCKS.

11. SHUTTER'S MANUFACTURER LABEL SHALL BE PLACED ON A READILY VISIBLE LOCATION. ONE LABEL SHALL BE PLACED FOR EVERY OPENING. LABEL SHALL READ AS FOLLOWS:
EASTERN METAL SUPPLY, INC.
LAKEWORTH, FL.
MIAMI-DADE COUNTY PRODUCT CONTROL APPROVED.

12. BERTHA H.V. ACCORDION SHUTTER SYSTEM'S INSTALLATION SHALL COMPLY WITH SPECS INDICATED IN THIS DRAWING PLUS ANY BUILDING AND ZONING REGULATIONS PROVIDED BY THE JURISDICTION WHERE PERMIT IS APPLIED TO.

13. (a) THIS P.A.D. PREPARED BY THIS ENGINEER IS GENERIC AND DOES NOT PROVIDE INFORMATION FOR A SITE SPECIFIC PROJECT; i.e. WHERE THE SITE CONDITIONS DEVIATE FROM THE P.A.D.

(b) CONTRACTOR TO BE RESPONSIBLE FOR THE SELECTION, PURCHASE AND INSTALLATION INCLUDING LIFE SAFETY OF THIS PRODUCT, BASED ON THIS P.A.D., PROVIDED HE/SHE DOES NOT DEVIATE FROM THE CONDITIONS DETAILED ON THIS DOCUMENT. CONSTRUCTION SAFETY AT SITE IS THE CONTRACTOR'S RESPONSIBILITY.

(c) THIS P.A.D. WILL BE CONSIDERED INVALID IF ALTERED BY ANY MEANS.

(d) SITE SPECIFIC PROJECTS SHALL BE PREPARED BY A FLORIDA REGISTERED ENGINEER OR ARCHITECT WHICH WILL BECOME THE ENGINEER OF RECORD (E.O.R.) FOR THE PROJECT AND WHO WILL BE RESPONSIBLE FOR THE PROPER USE OF THE P.A.D. ENGINEER OF RECORD, ACTING AS A DELEGATED ENGINEER TO THE P.A.D. ENGINEER SHALL SUBMIT TO THIS LATTER THE SITE SPECIFIC DRAWINGS FOR REVIEW.

(e) THIS P.A.D. SHALL BEAR THE DATE AND ORIGINAL SEAL AND SIGNATURE OF THE PROFESSIONAL ENGINEER OF RECORD THAT PREPARED IT.

TABLE OF CONTENTS

AREA 1: HV BLADES ① & ②

GENERAL NOTES.		SHEET 1
SYSTEM COMPONENTS.	1-20	SHEET 2
SYSTEM COMPONENTS.	21-37	SHEET 3
TYPICAL SHUTTER ASSEMBLY.	38-43	SHEET 4

AREA 2: HV BLADE ① ONLY

TYPICAL SHUTTER ELEVATION & NOTES ON LOCKS.	SHEET 5
INSTALLATION DETAILS A-E -CONCRETE & BLOCK	SHEET 6
INSTALATION DETAILS F-L-CONCRETE & BLOCK.	SHEET 7
CENTERMATE DETAILS HV.	SHEET 8
CENTERMATE ALTERNATING DETAILS HV.	SHEET 9
CENTERMATE DETAILS HD.	SHEET 10
END CONNECTION DETAILS 1-6-CONCRETE & BLOCK	SHEET 11
MAXIMUM SPAN TABLES.	SHEET 12
ANCHOR SCHEDULE- CONCRETE & BLOCK.	SHEET 13
ANCHOR SCHEDULE- CONCRETE & BLOCK.	SHEET 14
ANCHOR SCHEDULE- CONCRETE & BLOCK.	SHEET 15
ANCHOR SCHEDULE- WOOD.	SHEET 16
ANCHOR SCHEDULE- WOOD.	SHEET 17
INSTALLATION DETAILS M-R-WOOD.	SHEET 18
INSTALATION DETAILS S-X-WOOD.	SHEET 19
END CONNECTION DETAILS 7-12, X.	SHEET 20

AREA 3: HV BLADE ② ONLY

TYPICAL SHUTTER ELEVATION & NOTES ON LOCKS.	SHEET 21
INSTALLATION DETAILS AA-GG.	SHEET 22
CENTERMATE DETAILS HD.	SHEET 23
END CONNECTION DETAILS 1-6, X.	SHEET 24
MAXIMUM SPAN TABLES.	SHEET 25
ANCHOR SCHEDULE CONCRETE.	SHEET 26

F.B.C.(**H**igh **V**elocity **H**urricane **Z**one)

Approved as complying with the Florida Building Code
Date 02/28/2008
NOA# 07-0817.09
Miami Dade Product Control Division
By

MIAMI-DADE COUNTY

JUL 20 2007

P.E. SEAL/SIGNATURE/DATE

TILTECO INC.
TILLIT TESTING & ENGINEERING COMPANY
6355 N.W. 36th. St., Ste. 305, VIRGINIA GARDENS, FLORIDA 33166
Phone : (305)871-1530 . Fax : (305)871-1531
e-mail: tilteco@aol.com
EB-0006719
WALTER A. TILLIT Jr. P. E.
FLORIDA Lic. # 44167

EASTERN METAL SUPPLY, INC.
(ASSA # 1)
3600 23rd AVENUE SOUTH
LAKEWORTH, FL 33461
PH (561) 533-6061 FAX (561) 588-4780

© 2003 EASTERN METAL SUPPLY, INC.

BERTHA HV ™
Accordion Shutter System

REV. No	DESCRIPTION	DATE
1		
2		
3		
4		
5		
6		

Drawn by: F.P.
DATE: 07/19/07
DRAWING No
07-195
SHEET
1 OF 26

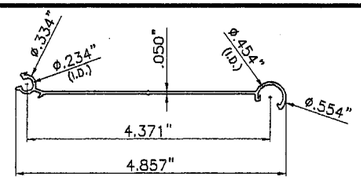

1 HV BLADE

COVERED UNDER US PATENT # 5458179
6063-T6 ALLOY AND TEMPER

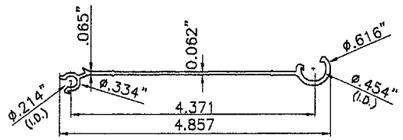

2 HV BLADE

COVERED UNDER US PATENT # 5458179
6005-T5 ALLOY AND TEMPER

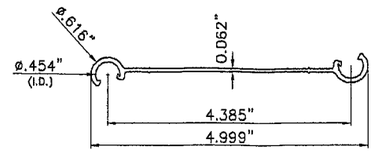

3 HV UNIVERSAL FLOATER

QUALIFIED FOR USE W/ HV BLADE 1 & 2
6005-T5 ALLOY AND TEMPER

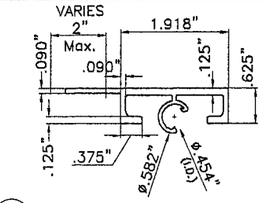

4 HV DIRECT MOUNT

QUALIFIED FOR USE W/ HV BLADE 1 & 2.
6063-T6 ALLOY AND TEMPER

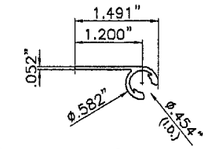

5 HV 90°/180° STARTER

QUALIFIED FOR USE W/ HV BLADE 1 & 2.
6063-T6 ALLOY AND TEMPER

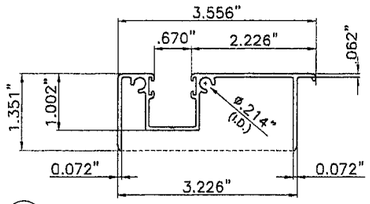

6 HV ADJ. FLOOR TRACK

QUALIFIED FOR USE W/ HV BLADE 1 & 2.
6063-T6 ALLOY AND TEMPER

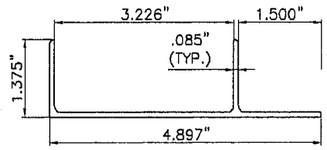

7 HV ADJ. ADAPTER W/LIP

QUALIFIED FOR USE W/ HV BLADE 1 & 2.
6063-T6 ALLOY AND TEMPER

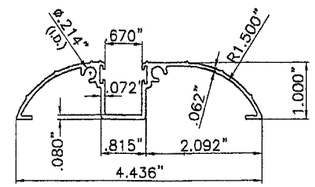

8 HV WALK-OVER TRACK

QUALIFIED FOR USE W/ HV BLADE 1 & 2
6063-T6 ALLOY AND TEMPER

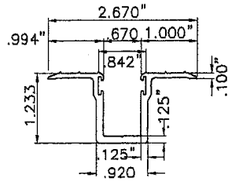

9 HV TRENCH TRACK

QUALIFIED FOR USE W/ HV BLADE 2 ONLY.
6063-T6 ALLOY AND TEMPER

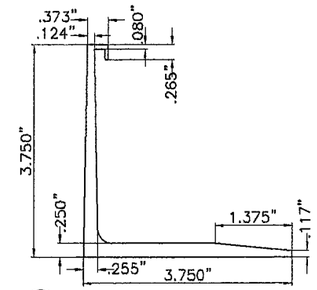

10 HV RAINGUARD

QUALIFIED FOR USE W/ HV BLADE 1 & 2.
6063-T6 ALLOY AND TEMPER

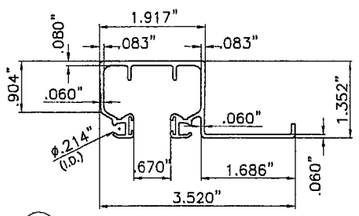

11 HV CEILING HEADER

QUALIFIED FOR USE W/ HV BLADE 1 ONLY, SEE SECTIONS FOR VALIDITY.
6063-T6 ALLOY AND TEMPER

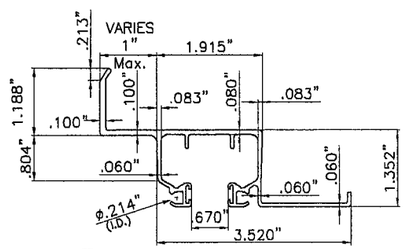

12 HV HEADER/SILL

QUALIFIED FOR USE W/ HV BLADE 1 ONLY
6063-T6 ALLOY AND TEMPER

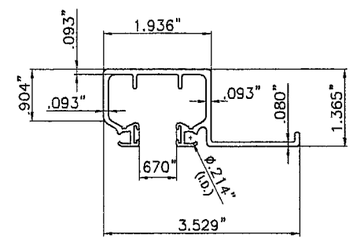

13 HD CEILING HEADER/SILL

QUALIFIED FOR USE W/ HV BLADE 1
SEE SECTIONS FOR VALIDITY.
6063-T6 ALLOY AND TEMPER

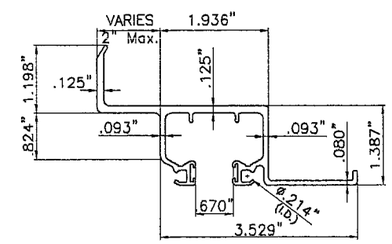

14 HD WALL HEADER/SILL

QUALIFIED FOR USE W/ HV BLADE 1 ONLY.
6063-T6 ALLOY AND TEMPER

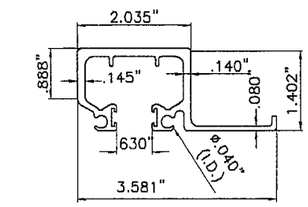

15 SHD CEILING HEADER/SILL

QUALIFIED FOR USE W/ HV BLADE 1 & 2
6063-T6 ALLOY AND TEMPER

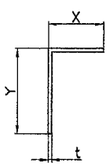

X	Y	t
1"	1"	0.062"
1"	2"	0.062"
2"	2"	0.062"
2"	3"	0.062"
2"	4"	0.062"
2"	5"	0.062"

16 SIDE ANGLES

QUALIFIED FOR USE W/ HV BLADE 1 & 2
6063-T6 ALLOY AND TEMPER

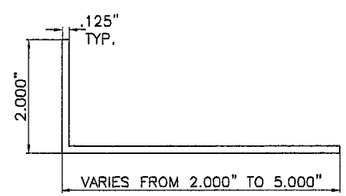

17 B.O. WALL ANGLE

QUALIFIED FOR USE W/ HV BLADE 1 ONLY.
6063-T6 ALLOY AND TEMPER

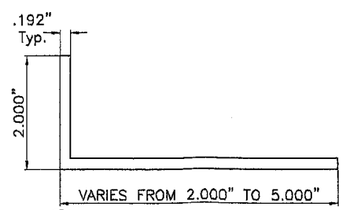

18 B.O. WALL ANGLE

QUALIFIED FOR USE W/ HV BLADE 2
6063-T6 ALLOY AND TEMPER

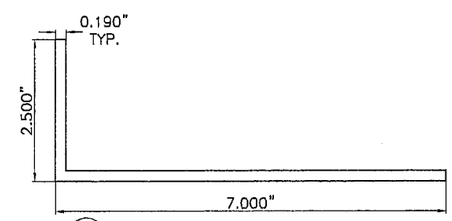

19 7" B.O. WALL ANGLE

QUALIFIED FOR USE W/ HV BLADE 1 ONLY.
6063-T6 ALLOY AND TEMPER

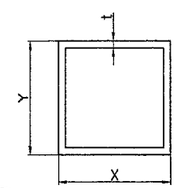

X	Y	t
2"	2"	0.125"
3"	3"	0.090"

20 CORNER POSTS

QUALIFIED FOR USE W/ HV BLADE 1 & 2
6063-T6 ALLOY AND TEMPER

F.B.C.(**H**igh **V**elocity **H**urricane **Z**one)

Approved as complying with the Florida Building Code
Date 02/28/2008
NOA# 07-0817.09
Miami-Dade Permitting & Control Division
By Helen A. Mohr

MIAMI-DADE COUNTY

JUL 20 2007

P.E. SEAL/SIGNATURE/DATE

TILTECO INC.
TILLIT TESTING & ENGINEERING COMPANY
6355 N.W. 36th. St., Ste. 305, VIRGINIA GARDENS, FLORIDA 33166
Phone : (305)871-1530 . Fax : (305)871-1531
e-mail: tilteco@aol.com
EB-0006719
WALTER A. TILLIT Jr. P. E.
FLORIDA Lic. # 44167

EASTERN METAL SUPPLY, INC.
(ASSA # 1)
3600 23rd AVENUE SOUTH
LAKEWORTH, FL 33461
PH (561) 533-6061 FAX (561) 588-4780

© 2003 EASTERN METAL SUPPLY, INC.

BERTHA HV™
Accordion Shutter System

REV. No	DESCRIPTION	DATE
1		
2		
3		
4		
5		
6		

Drawn by: F.P.
DATE: 07/19/07
DRAWING No 07-195
SHEET 2 OF 26

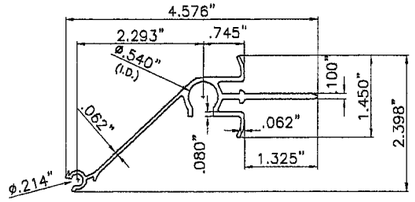

21 HV CENTERMATE

QUALIFIED FOR USE W/ HV BLADE 1 ONLY
6063-T6 ALLOY AND TEMPER

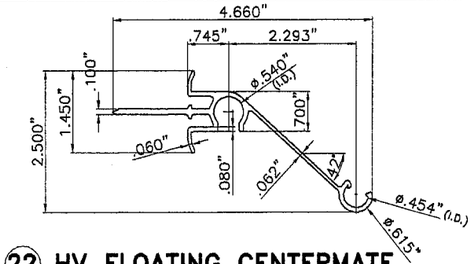

22 HV FLOATING CENTERMATE

QUALIFIED FOR USE W/ HV BLADE 1 ONLY
6063-T6 ALLOY AND TEMPER

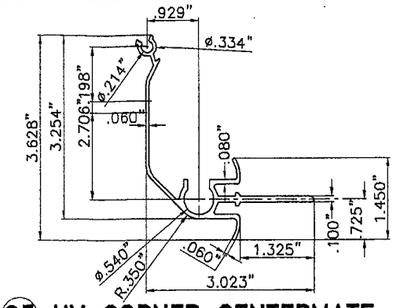

23 HV CORNER CENTERMATE

QUALIFIED FOR USE W/ HV BLADE 1 ONLY
6063-T6 ALLOY AND TEMPER

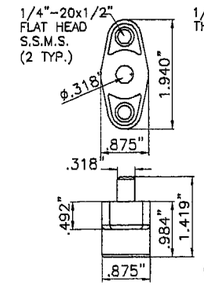

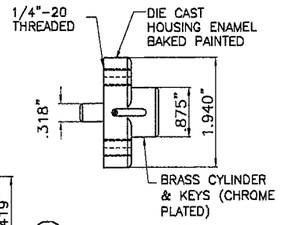

24 HV LOCK

QUALIFIED FOR USE W/ HV BLADE 1 ONLY.

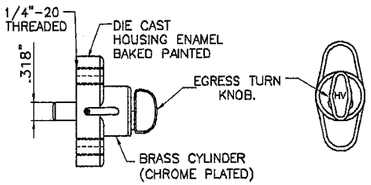

25 HV EGRESS LOCK

QUALIFIED FOR USE W/ HV BLADE 1 ONLY.

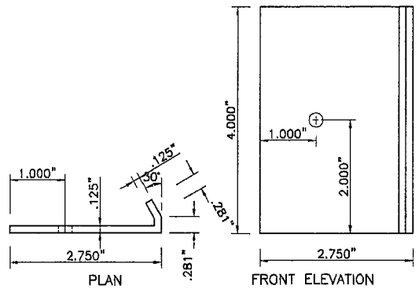

27 LOCKER FOR "T" LOCK CENTERMATE

QUALIFIED FOR USE W/ HV BLADE 1 ONLY
6063-T6 ALLOY AND TEMPER

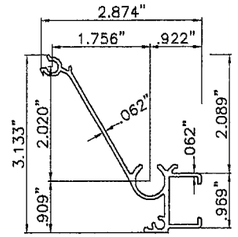

28 HV MALE "T" LOCK CENTERMATE

QUALIFIED FOR USE W/ HV BLADE 1 ONLY
6063-T6 ALLOY AND TEMPER

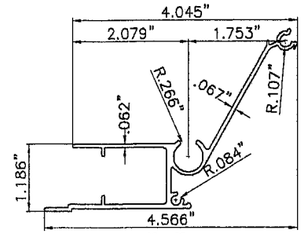

29 HV FEMALE "T" LOCK CENTERMATE

QUALIFIED FOR USE W/ HV BLADE 1 ONLY
6063-T6 ALLOY AND TEMPER

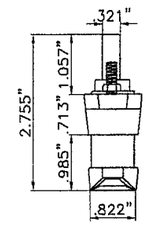

30 HV "T" LOCK

QUALIFIED FOR USE W/HV BLADE 1 ONLY.

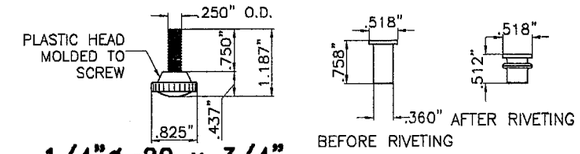

1/4"ø-20 x 3/4" S.S. THUMBSCREW

1/4"ø-20 RIVNUT*

*SERIES 9444 ALUMINUM (2024-T3 ALLOY) LARGE FLANGE THIN SHEET NUTSERT, PART # 0820, AS MANUFACTURED BY AVDEL CHERRY TEXTORN, PARSIPPENY, NEW JERSEY 07054 OR EQUAL.

26 HV ALTERNATIVE LOCK

QUALIFIED FOR USE W/ HV BLADE 1 ONLY.

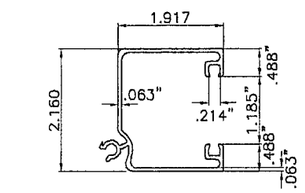

31 HD CENTERMATE W/ NO LOCKING ROD

QUALIFIED FOR USE W/ HV BLADE 1 & 2
6063-T6 ALLOY AND TEMPER

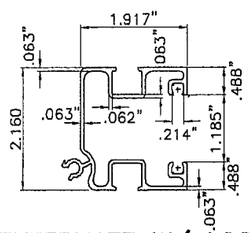

32 HD CENTERMATE W/ LOCKING ROD

QUALIFIED FOR USE W/ HV BLADE 1 & 2
6063-T6 ALLOY AND TEMPER

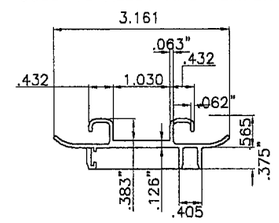

33 HD CENTERMATE'S INSERT

QUALIFIED FOR USE W/ HV BLADE 1 & 2
6063-T6 ALLOY AND TEMPER

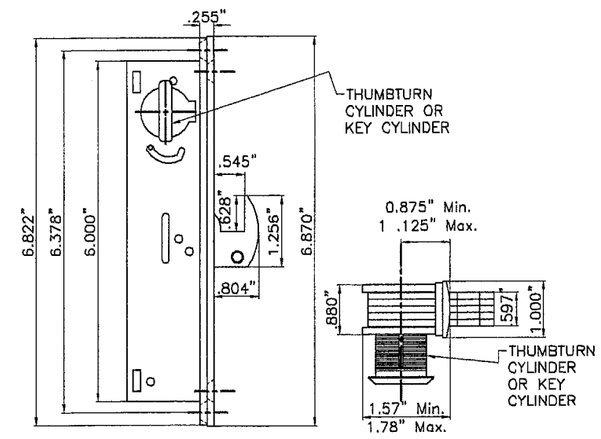

34 HD LOCK

BY REGENT HARDWARE MORTISE LOCKS SERIES 2333 HOOK BOLT LOCK.
QUALIFIED FOR USE W/ HV BLADE 1 & 2.

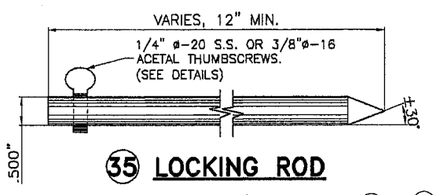

35 LOCKING ROD

QUALIFIED FOR USE W/ HV BLADE 1 & 2.
6063-T6 ALLOY AND TEMPER

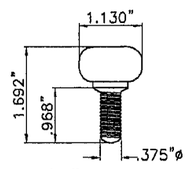

36 HV 3/8"ø-16 ACETAL THUMBSCREWS

QUALIFIED FOR USE W/ HV BLADE 1 & 2.

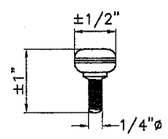

37 HV 1/4" ø-20 AISI 304 SERIES S.S. THUMBSCREWS

QUALIFIED FOR USE W/ HV BLADE 1 & 2

F.B.C.(**H**igh **V**elocity **H**urricane **Z**one)

Approved as complying with the Florida Building Code
Date 02/28/2008
NOA# 07-0817.09
Miami Dade Product Control Division
By Helen A. Melon

MIAMI-DADE COUNTY

JUL 20 2007

P.E. SEAL/SIGNATURE/DATE

TILTECO INC.
TILLIT TESTING & ENGINEERING COMPANY
6355 N.W. 36th. St., Ste. 305, VIRGINIA GARDENS, FLORIDA 33166
Phone : (305)871-1530 . Fax : (305)871-1531
e-mail: tilteco@aol.com
EB-0006719
WALTER A. TILLIT Jr. P. E.
FLORIDA Lic. # 44167

EASTERN METAL SUPPLY, INC.
(ASSA # 1)
3600 23rd AVENUE SOUTH
LAKEWORTH, FL 33461
PH (561) 533-6061 FAX (561) 588-4780

© 2003 EASTERN METAL SUPPLY, INC.

BERTHA HV™
Accordion Shutter System

REV. No	DESCRIPTION	DATE
1		
2		
3		
4		
5		
6		

Drawn by: F.P.
DATE: 07/19/07
DRAWING No 07-195
SHEET 3 OF 26

SHUTTER ASSEMBLY SCHEDULE FOR HV ① AND HV ② BLADES.

①	HV BLADE 1
②	HV BLADE 2
㊳	HV LONG RECESSED NYLON BUSHING
㊴	HV SHORT RECESSED NYLON BUSHING
㊵	HV NYLON HAT WASHER
㊶	HV WHEEL CARRIAGE AISI 302–303 SERIES ø.870"x3/16" THICK NYLON WHEEL. 0.188"ø AISI 302 SERIES S.S. RIVETS
㊷	HV 1 3/4" ACCORDION PIN W/ #8 HEAD *
㊸	HV 2 3/4" ACCORDION PIN W/ #8 HEAD *

*** HV PIN REQUIREMENTS AT EXTERIOR BLADE KNUCKLE FOR HV ① & HV ② BLADES.**

(1) HV PIN ㊸ SHALL ALWAYS BE USED AT ALL EXTERIOR BOTTOM KNUCKLES OF HV ACCORDION SYSTEM W/ HV ① BLADE.

(2) HV PIN ㊷ MAY BE USED IN LIEU OF ㊸ AND ONLY AT EXTERIOR BOTTOM KNUCKLES OF HV ACCORDION SYSTEM W/ HV ② BLADE WHEN CORRESPONDING TO INSTALLATIONS "CC" AND "DD", SHEET 22 OF 26.

(3) HV PIN ㊷ OR ㊸ W/ 1/2" O.D. 1/16" THICK S.S. WASHER SHALL BE USED FOR DIRECT MOUNT INSTALLATION PER DETAIL X, SHEETS 11 & 24 OF 26.

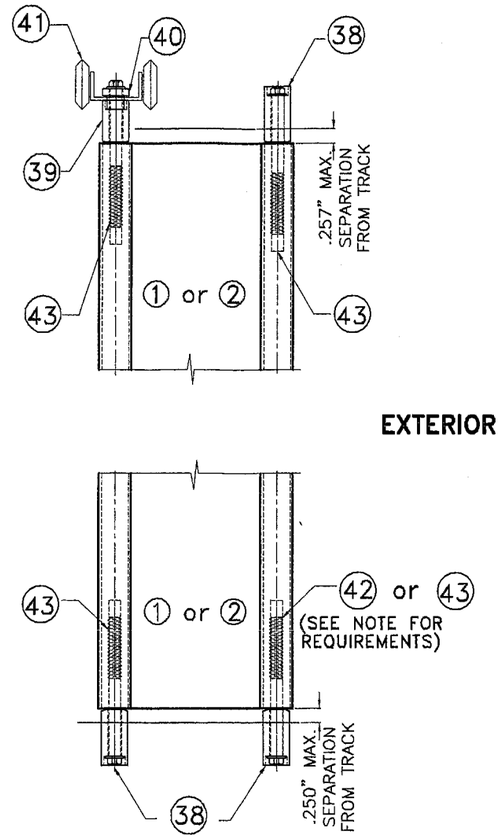

TYPICAL SHUTTER ASSEMBLY

SCALE: 3/8" = 1"

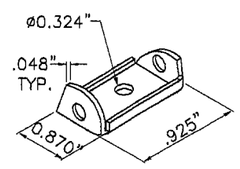

WHEEL CARRIAGE DETAIL

N.T.S.

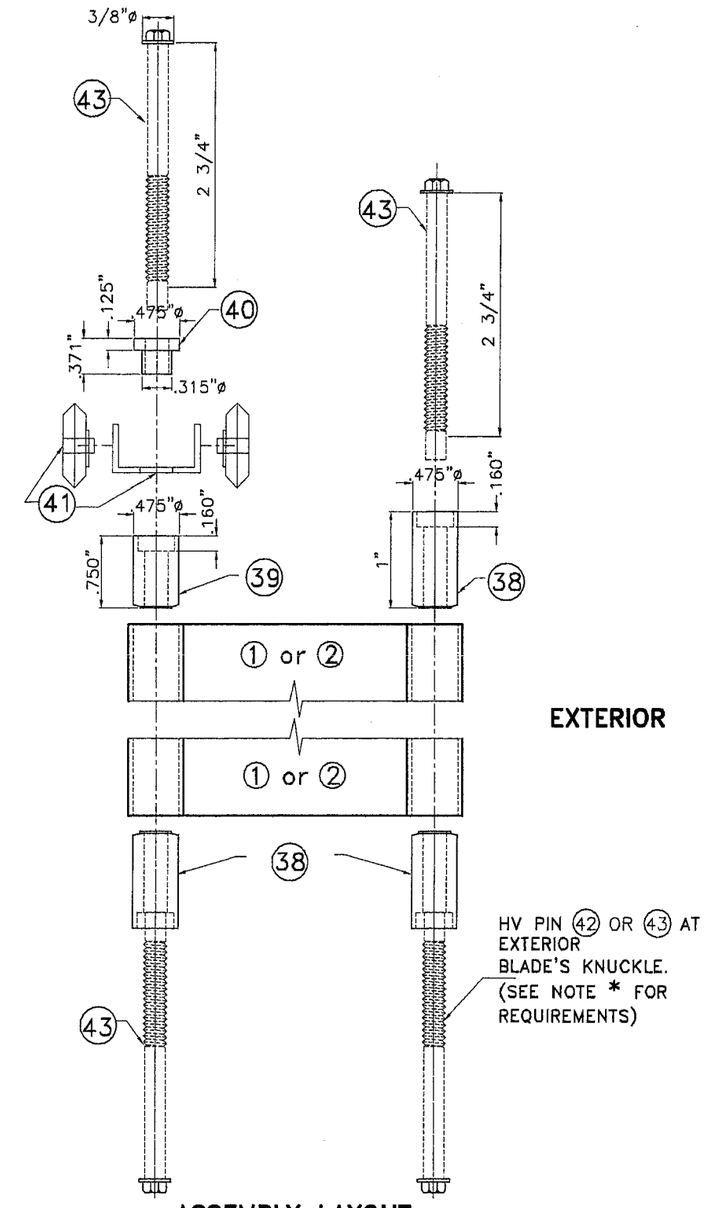

ASSEMBLY LAYOUT

N.T.S.

F.B.C.(**H**igh **V**elocity **H**urricane **Z**one)

Approved in compliance with the Florida Building Code
Date 02/28/2008
NOAS 07-0817.09
Miami Dade Product Control Division
By Henry A. Miller

MIAMI–DADE COUNTY

JUL 20 2007

P.E. SEAL/SIGNATURE/DATE

TILTECO INC.

TILLIT TESTING & ENGINEERING COMPANY
6355 N.W. 36th. St., Ste. 305, VIRGINIA GARDENS, FLORIDA 33166
Phone : (305)871–1530 . Fax : (305)871–1531
e–mail: tilteco@aol.com
EB–0006719
WALTER A. TILLIT Jr. P. E.
FLORIDA Lic. # 44167

EASTERN METAL SUPPLY, INC.
(ASSA # 1)
3600 23rd AVENUE SOUTH
LAKEWORTH, FL 33461
PH (561) 533–6061 FAX (561) 588–4780

© 2003 EASTERN METAL SUPPLY, INC.

BERTHA HV™
Accordion Shutter System

REV. No	DESCRIPTION	DATE
1		
2		
3		
4		
5		
6		

Drawn by: F.P.
DATE: 07/19/07
DRAWING No **07–195**
SHEET **4 OF 26**

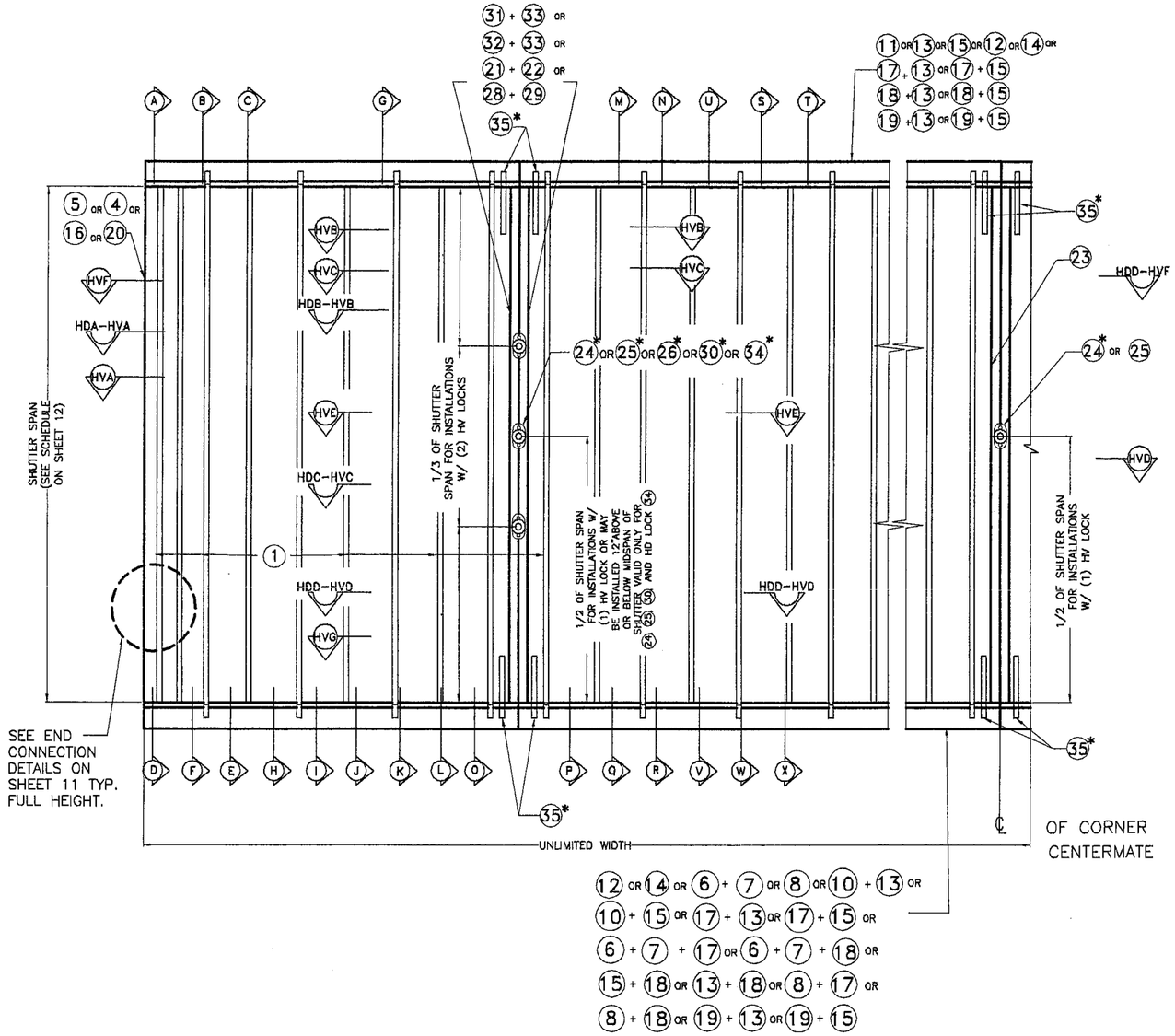

TYPICAL 1 HV BLADE SHUTTER ELEVATION

N.T.S.

*NOTES ON HV LOCKS AND CENTERMATES:

1. **MANDATORY CONDITION #1:** ONE HV LOCK 24 or 25 SHALL BE USED AT 1/2 OF SHUTTER SPAN FOR ANY SPAN OR 12" ABOVE OR BELOW 1/2 OF SHUTTER SPAN FOR SPANS UP TO 105", AND FOR INSTALLATIONS AT ANY ELEVATION. HV LOCK 24 or 25 MAY BE USED AS AN INSIDE OR OUTSIDE LOCK, ATTACHED TO 21 OR 22 CENTERMATES W/(2) 1/4"ø-20 x 1/2" LONG FLAT HEAD S.S. M.S. LOCATION OF LOCK SHALL BE AS INDICATED ON TYPICAL SHUTTER ELEVATION.

2. **LIMITED MANDATORY CONDITION #2 ALTERNATE TO MANDATORY CONDITION #1 (VALID ONLY FOR FLOOR/CEILING INSTALLATIONS.** TWO HV LOCKS 24 OR 25 OR ONE HV LOCK 24 OR 25 W/ TWO LOCKING RODS 35 AT TOP & BOTTOM SHALL BE USED FOR ANY SPAN AND INSTALLATION AT ANY ELEVATION. HV LOCK 24 OR 25 SHALL BE ATTACHED TO 21 OR 22 CENTERMATES W/ SAME SPECIFICATIONS AS PER MANDATORY CONDITION #1. LOCATION OF LOCK/LOCKS AS APPLICABLE SHALL BE AS INDICATED ON TYPICAL SHUTTER ELEVATION. MAXIMUM SHUTTER SPAN SHALL BE DETERMINED AS PER SCHEDULE #3 ON SHEET 12.

3. **OPTIONAL CONDITION #1:** IF DESIRED, FOR BETTER PERFORMANCE OR FOR SECURITY PURPOSES, UP TO TWO HV LOCKS 24 , 25 OR 26 MAY BE USED AS AN INSIDE OR OUTSIDE LOCK. CONNECTION OF LOCKS TO CENTERMATES 21 OR 22 SHALL BE AS INDICATED ON NOTE (1) ABOVE.
LOCATION OF LOCKS SHALL BE AS INDICATED ON TYPICAL SHUTTER ELEVATION.

4. **OPTIONAL CONDITION #2 (VALID ONLY WHEN MANDATORY CONDITION #1 OR LIMITED MANDATORY CONDITION #2 IS USED W/TWO H.V. LOCKS):** LOCKING RODS 35 ARE NOT REQUIRED AT HURRICANE POSITION, BUT MAY BE USED IF DESIRED TO ENHANCE SHUTTER PERFORMANCE. LOCKING RODS 35 OR AN ALTERNATIVE DEVICE MAY ALSO BE USED AT STACKING POSITION (NON HURRICANE POSITION).

5. **MANDATORY CONDITION #2:** ONE HV LOCK 24 or 25 SHALL BE USED AT CORNER CENTERMATES FOR ANY SPAN AND INSTALLATIONS AT ANY ELEVATION. HV LOCK 24 or 25 SHALL BE USED AS AN OUTSIDE OR INSIDE LOCK, ATTACHED TO 23 CORNER CENTERMATE W/(2) 1/4"ø-20 x 1/2" LONG FLAT HEAD S.S. M.S. TWO LOCKING RODS 35 AT TOP & BOTTOM SHALL BE USED. LOCATION OF LOCK SHALL BE AS INDICATED ON TYPICAL SHUTTER ELEVATION. MAXIMUM SHUTTER SPAN SHALL BE DETERMINED AS PER SCHEDULES SHOWN ON SHEET 12.

6. **FIRST ALTERNATE TO MANDATORY CONDITION #1 VALID ONLY FOR HV LOCK 26 W/ SYMMETRICAL CENTERMATES 21 OR 22 :** ONE ALTERNATE HV LOCK 26 MAY BE USED IN LIEU OF HV LOCK 24 or 25 FOR ANY SPAN AND INSTALLATIONS AT ANY ELEVATION. ALTERNATE LOCK 26 MAY BE USED AS AN INSIDE OR OUTSIDE LOCK. ATTACHMENT OF 1/4"ø-20x3/4" S.S. THUMBSCREW TO 21 OR 22 CENTERMATES SHALL BE MADE W/ 1/4"ø-20x3/4" ALUM. RIVNUT AS SHOWN ON SECTION HVE, SHEET 8. ONE LOCK SHALL BE USED AT 1/2 OF SHUTTER SPAN OR TWO LOCKS AT 1/3 OF SHUTTER SPAN.

*NOTES ON HV "T" LOCKS AND CENTERMATES:

1. **SECOND ALTERNATE TO MANDATORY CONDITION #1 VALID ONLY FOR HV "T" LOCK 30 , AND CENTERMATES 28 AND 29 :** ONE ALTERNATE HV "T" LOCK 30 MAY BE INSTALLED IN LIEU OF HV LOCKS 24 OR 25 FOR ANY SPAN AND INSTALLATION AT ANY ELEVATION. ALTERNATE LOCK 30 MAY BE USED AS AN INSIDE OR OUTSIDE LOCK. ATTACHMENT OF LOCK 30 INCLUDES USING REINFORCING LOCKER 27 , AS SHOWN ON SECTION HVG, SHEET 9, WHICH MUST BE CONNECTED TO CENTERMATES 28 AND 29 W/ 1/4"ø-20 x 1 1/2" LONG S.S. THREADED BOLT W/ 7/8"ø x 3/32" WINGNUT OR W/ 1/4"ø-20x1" S.S.M.S. INTO A 1/4"øx 5/8" RIVNUT. LOCK MAY BE INSTALLED AT MIDSPAN OR 12" MAXIMUM ABOVE AND BELOW MIDSPAN. USE OF TWO LOCKING RODS 35 TOP AND BOTOM IS MANDATORY.

*NOTES ON HD LOCKS & CENTERMATES:

1. **HD LOCK 34 W/ HD CENTERMATES 31 OR 32 W/ 33** : ONE ALTERNATE HD LOCK 34 MAYBE USED IN LIEU OF HV LOCKS 24 OR 25 FOR ANY SPAN AND INSTALLATIONS AT ANY ELEVATION. ALTERNATE HD LOCK 34 MAY BE USED AS AN INSIDE OR OUTSIDE LOCK. ATTACHMENT OF HD LOCK 34 TO 33 IS W/ 3 #8 x 3/8" F.H. S.S.M.S., AND INCLUDES REINFORCEMENT INSERT 33 AS SHOWN ON SECTIONS HDB-HVB AND HDC-HVC, SHEET 10. LOCK MAY BE INSTALLED AT MIDSPAN OR 12" MAXIMUM BELOW OR ABOVE MIDSPAN. USE OF LOCKING RODS 35 IS COMPLETELY OPTIONAL.

F.B.C.(**H**igh **V**elocity **H**urricane **Z**one)

Approved as complying with the Florida Building Code
Date 02/28/2008
NOA 07-0817.09
Miami Dade County Building Code Compliance Office
Division
By

MIAMI-DADE COUNTY

JUL 20 2007

P.E. SEAL/SIGNATURE/DATE

TILTECO INC.
TILLIT TESTING & ENGINEERING COMPANY
6355 N.W. 36th. St., Ste. 305, VIRGINIA GARDENS, FLORIDA 33166
Phone : (305)871-1530 . Fax : (305)871-1531
e-mail: tilteco@aol.com
EB-0006719
WALTER A. TILLIT Jr. P. E.
FLORIDA Lic. # 44167

EASTERN METAL SUPPLY, INC.
(ASSA # 1)
3600 23rd AVENUE SOUTH
LAKEWORTH, FL 33461
PH (561) 533-6061 FAX (561) 588-4780

© 2003 EASTERN METAL SUPPLY, INC.

BERTHA HV™
Accordion Shutter System

REV. No	DESCRIPTION	DATE
1		
2		
3		
4		
5		
6		

Drawn by: F.P.
DATE: 07/19/07
DRAWING No 07-195
SHEET 5 OF 26

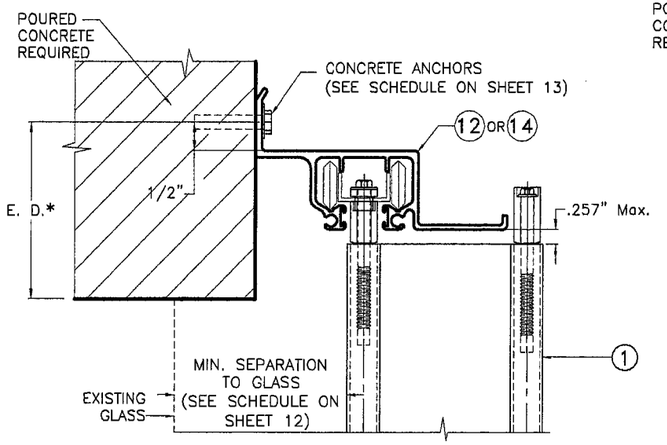

(A) HV WALL HEADER INSTALLATION

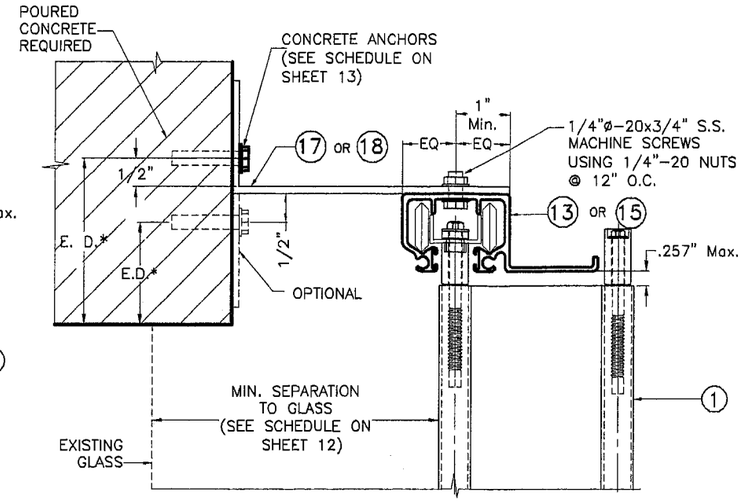

(B) HV WALL HEADER INSTALLATION

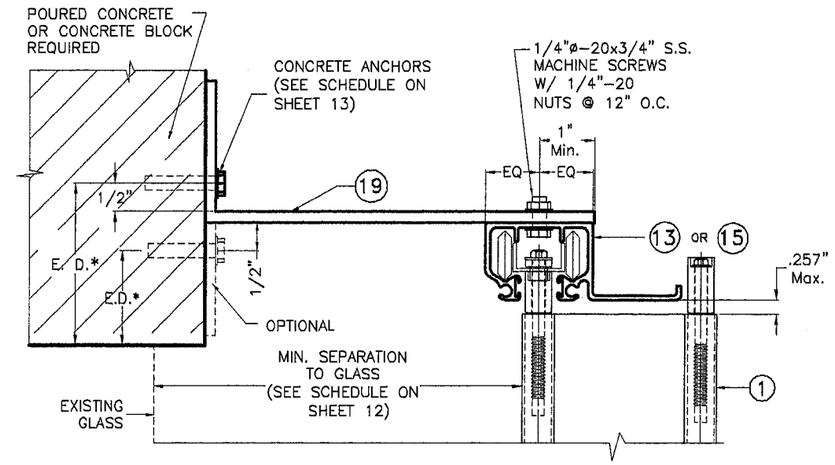

(C) HV WALL HEADER INSTALLATION

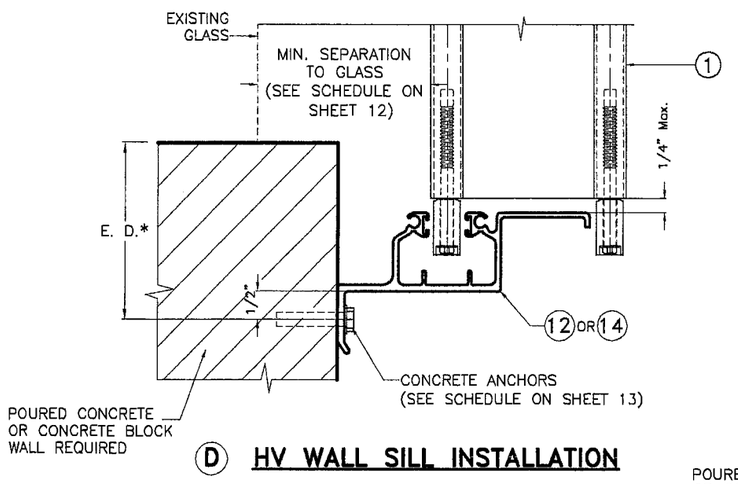

(D) HV WALL SILL INSTALLATION

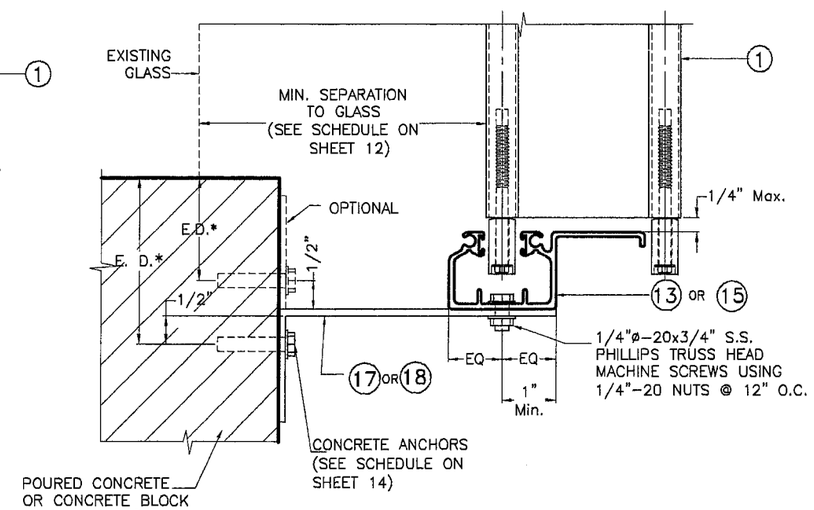

(E) HV WALL SILL INSTALLATION

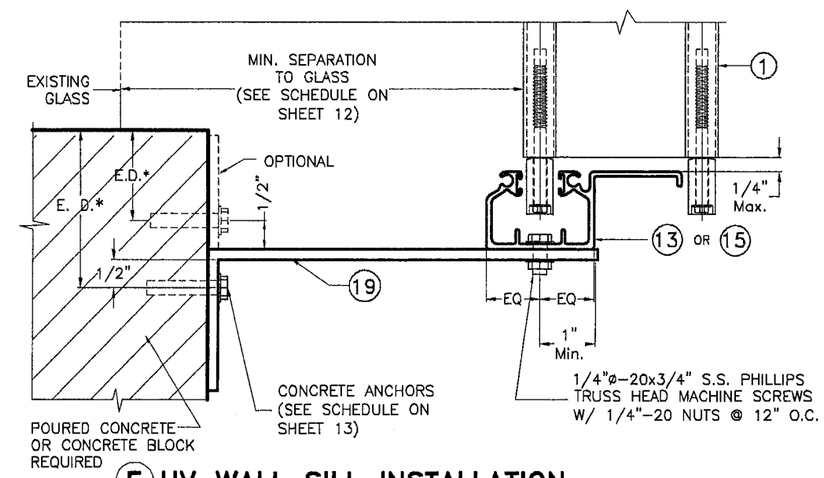

(F) HV WALL SILL INSTALLATION

NOTE FOR COMBINATION OF SECTIONS:

1- SEE SHEET 4 FOR TYPICAL SHUTTER ASSEMBLY
2- MOUNTING SECTIONS CAN BE COMBINED IN ANY WAY TO SUIT ANY INSTALLATION.

* E. D. = EDGE DISTANCE (SEE SPECIFICATIONS ON SHEET 14)

INSTALLATION DETAILS W/ ① HV BLADE

F.B.C.(**H**igh **V**elocity **H**urricane **Z**one)

Approved as complying with the Florida Building Code
Date 02/28/2008
NOA# 07-0817.09
Miami Dade Product Control Division
By

MIAMI-DADE COUNTY

JUL 20 2007

P.E. SEAL/SIGNATURE/DATE

TILTECO INC.
TILLIT TESTING & ENGINEERING COMPANY
6355 N.W. 36th. St., Ste. 305, VIRGINIA GARDENS, FLORIDA 33166
Phone : (305)871-1530 . Fax : (305)871-1531
e-mail: tilteco@aol.com
EB-0006719
WALTER A. TILLIT Jr. P. E.
FLORIDA Lic. # 44167

EASTERN METAL SUPPLY, INC.
(ASSA # 1)
3600 23rd AVENUE SOUTH
LAKEWORTH, FL 33461
PH (561) 533-6061 FAX (561) 588-4780

© 2003 EASTERN METAL SUPPLY, INC.

BERTHA HV™
Accordion Shutter System

REV. No	DESCRIPTION	DATE
1		
2		
3		
4		
5		
6		

Drawn by: F.P.
DATE: 07/19/07
DRAWING No 07-195
SHEET 6 OF 26

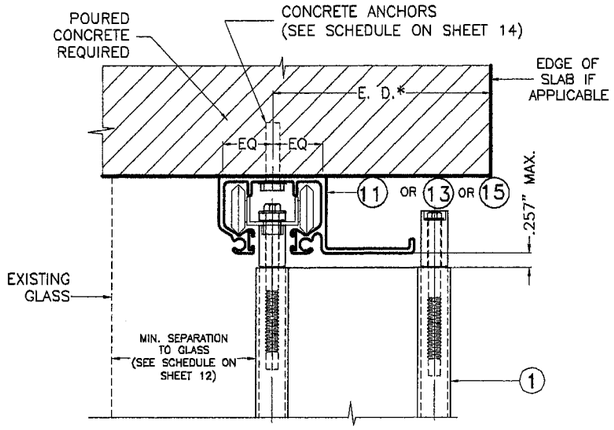

Ⓖ HV CEILING INSTALLATION

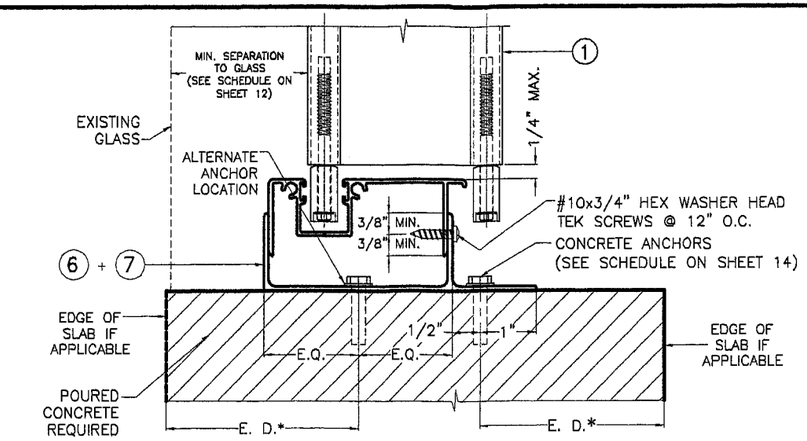

Ⓗ HV FLOOR INSTALLATION †

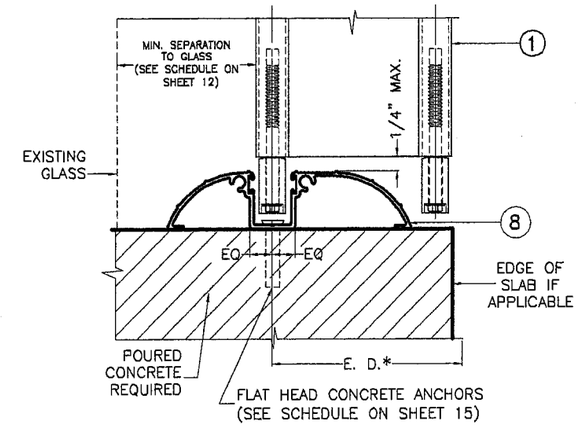

Ⓘ HV WALK-OVER INSTALLATION

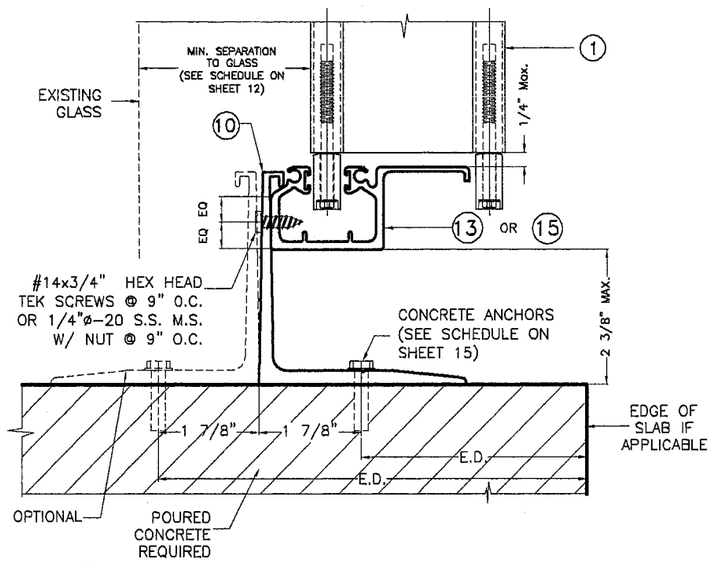

Ⓙ HV RAINGUARD INSTALLATION †

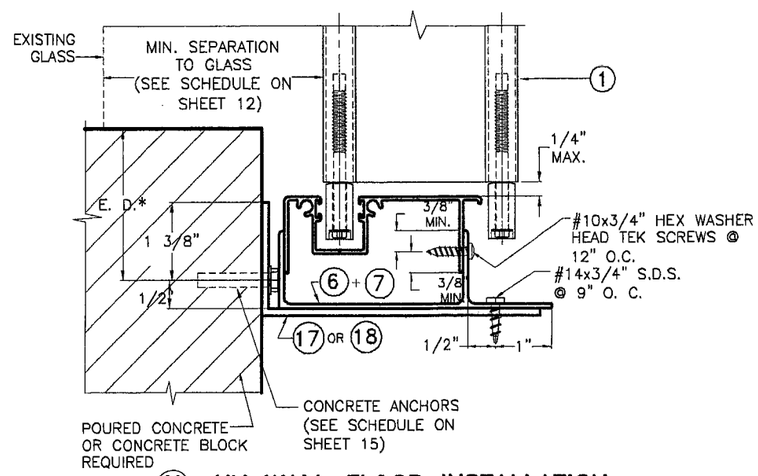

Ⓚ HV WALL FLOOR INSTALLATION

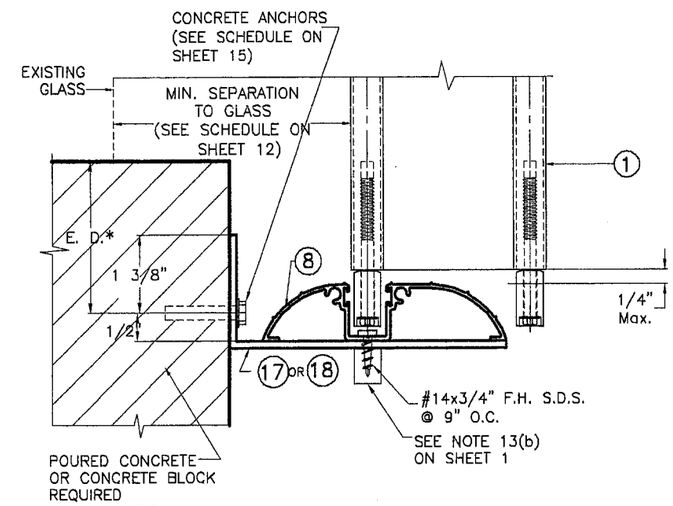

Ⓛ HV WALL WALK-OVER INSTALLATION

NOTE FOR COMBINATION OF SECTIONS:

1- SEE SHEET 4 FOR TYPICAL SHUTTER ASSEMBLY
2- MOUNTING SECTIONS CAN BE COMBINED IN ANY WAY TO SUIT ANY INSTALLATION.

* E. D. = EDGE DISTANCE (SEE SPECIFICATIONS ON SHEET 14)

NOTE:

† THIS INSTALLATION SHALL BE REMOVABLE WHEN PERFORMED ADJACENT TO AN OPERABLE EXIT OR ENTRANCE

INSTALLATION DETAILS W/ ① HV BLADE

F.B.C.(**H**igh **V**elocity **H**urricane **Z**one)

Approved as complying with the Florida Building Code
Date 02/28/2008
NOA# 07-0817.09
Miami Dade Product Control Division
By Helena A. Molina

MIAMI-DADE COUNTY

JUL 20 2007

P.E. SEAL/SIGNATURE/DATE

TILTECO INC.

TILLIT TESTING & ENGINEERING COMPANY
6355 N.W. 36th. St., Ste. 305, VIRGINIA GARDENS, FLORIDA 33166
Phone : (305)871-1530 . Fax : (305)871-1531
e-mail: tilteco@aol.com
EB-0006719
WALTER A. TILLIT Jr. P. E.
FLORIDA Lic. # 44167

EASTERN METAL SUPPLY, INC.
(ASSA # 1)
3600 23rd AVENUE SOUTH
LAKEWORTH, FL 33461
PH (561) 533-6061 FAX (561) 588-4780

© 2003 EASTERN METAL SUPPLY, INC.

BERTHA HV™
Accordion Shutter System

REV. No	DESCRIPTION	DATE
1		
2		
3		
4		
5		
6		

Drawn by: F.P.
DATE: 07/19/07
DRAWING No 07-195
SHEET 7 OF 26

SEE END WALL CONNECTION DETAILS ON SHEETS 11 & 20

INSTALLATIONS W/ (1) HV BLADE W/ HV CENTERMATES (21), (22) OR (23)

* SEE NOTES ON LOCKING RODS (35), HV LOCKS (24) or (25) AND ALTERNATE HV LOCK (26) ON SHEET 5.

** BLADE SLACK DETAIL HVF IS VALID FOR ALL CENTERMATES APPLICATION WITH BLADE (1)

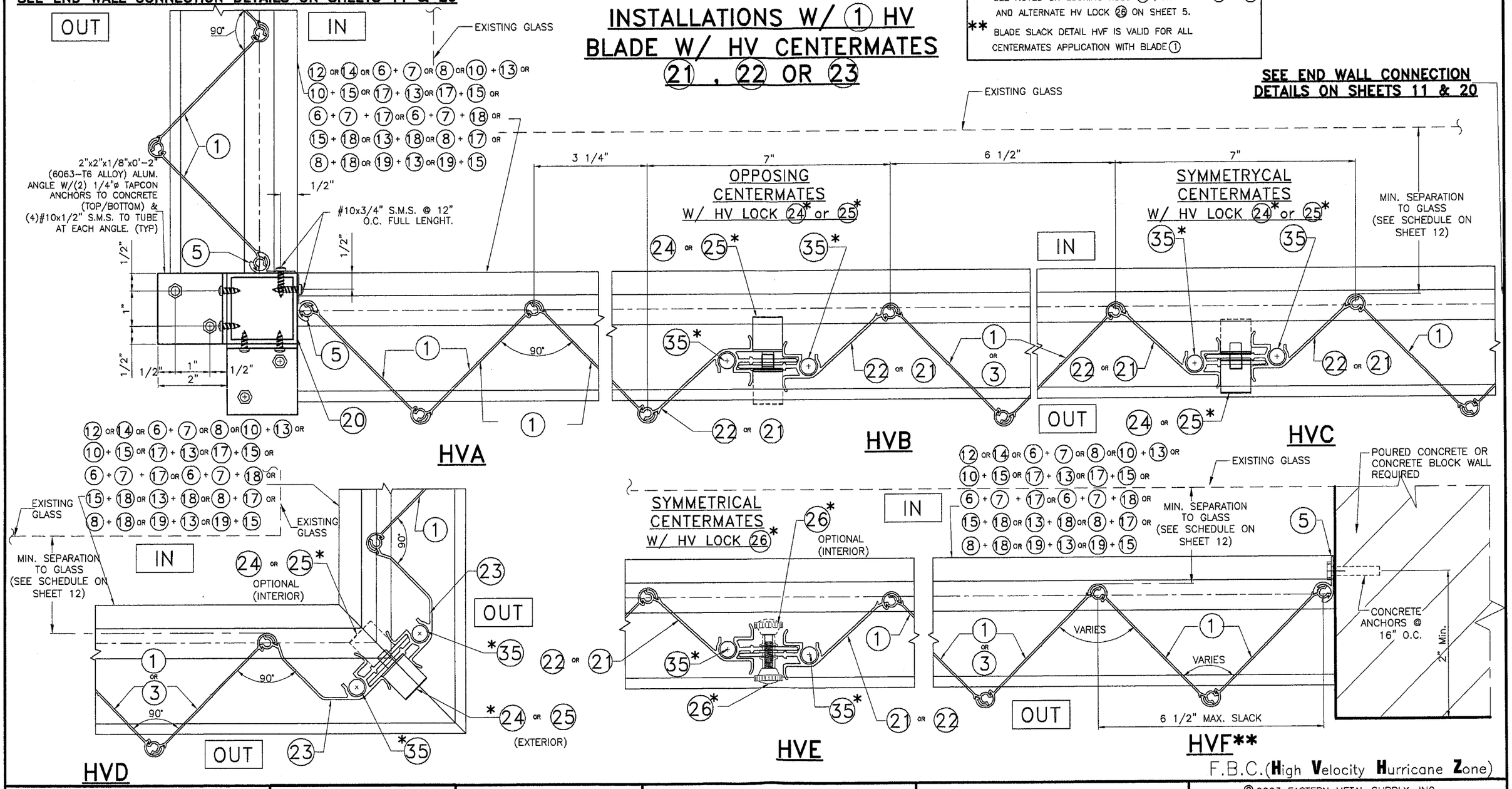

F.B.C.(**H**igh **V**elocity **H**urricane **Z**one)

Approved as complying with the Florida Building Code
Date 02/28/2008
NOA 07-0817.09
Miami Dade Product Control Division
By

MIAMI-DADE COUNTY

JUL 20 2007

P.E. SEAL/SIGNATURE/DATE

TILTECO INC.

TILLIT TESTING & ENGINEERING COMPANY
6355 N.W. 36th. St., Ste. 305, VIRGINIA GARDENS, FLORIDA 33166
Phone : (305)871-1530 . Fax : (305)871-1531
e-mail: tilteco@aol.com
EB-0006719
WALTER A. TILLIT Jr. P. E.
FLORIDA Lic. # 44167

EASTERN METAL SUPPLY, INC.
(ASSA # 1)
3600 23rd AVENUE SOUTH
LAKEWORTH, FL 33461
PH (561) 533-6061 FAX (561) 588-4780

© 2003 EASTERN METAL SUPPLY, INC.

BERTHA HV™
Accordion Shutter System

REV. No	DESCRIPTION	DATE
1		
2		
3		
4		
5		
6		

Drawn by: F.P.
DATE: 07/19/07
DRAWING No 07-195
SHEET 8 OF 26

ALTERNATE INSTALLATION W/HV "T" LOCK (30), HV MALE/FEMALE "T" LOCKS CENTERMATES (28), (29) & LOCKERS (27) W/ (1) HV BLADE *

SEE END CONNECTION DETAILS ON SHEETS 11 & 20

* BLADE (1) SLACK DETAIL HVF, INDICATED ON SHEET 8, AS WELL AS UNIVERSAL FLOATING BLADE (3) DETAIL HDD–HVD, INDICATED ON SHEET 10, MAY BE USED WITH THIS ALTERNATE INSTALLATION DETAIL HVG SHOWN IN THIS SHEET.

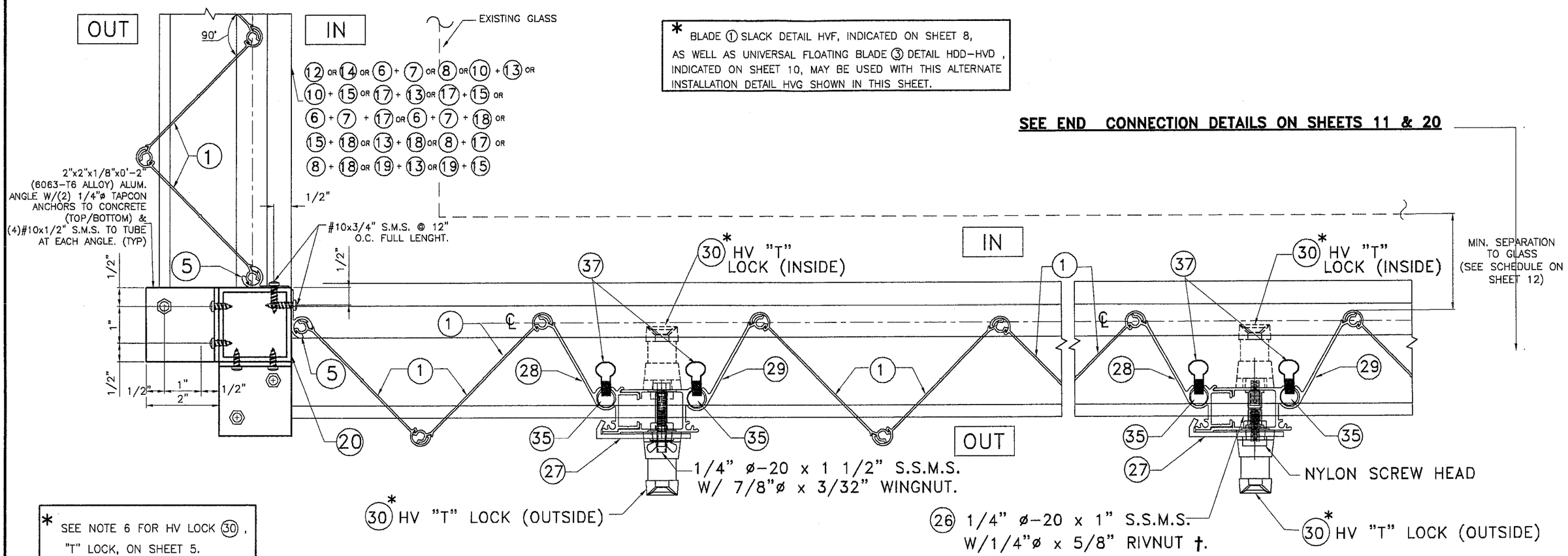

SEE END CONNECTION DETAILS ON SHEETS 11 & 20

* SEE NOTE 6 FOR HV LOCK (30), "T" LOCK, ON SHEET 5.

† SERIES 9444 ALUMINUM (2024–T3 ALLOY) LARGE FLANGE THIN SHEET NUTSERT, PART # 0820, AS MANUFACTURED BY AVDEL CHERRY TEXTORN, PARSIPPENY, NEW JERSEY 07054 OR EQUAL.

HVG*

F.B.C.(**H**igh **V**elocity **H**urricane **Z**one)

Approved as complying with the Florida Building Code
Date 02/28/2008
NOA# 07-0817.09
Miami Dade Product Control Division
By

MIAMI–DADE COUNTY

JUL 20 2007

P.E. SEAL/SIGNATURE/DATE

TILTECO INC.
TILLIT TESTING & ENGINEERING COMPANY
6355 N.W. 36th. St., Ste. 305, VIRGINIA GARDENS, FLORIDA 33166
Phone : (305)871–1530 . Fax : (305)871–1531
e-mail: tilteco@aol.com
EB–0006719
WALTER A. TILLIT Jr. P. E.
FLORIDA Lic. # 44167

EASTERN METAL SUPPLY, INC.
(ASSA # 1)
3600 23rd AVENUE SOUTH
LAKEWORTH, FL 33461
PH (561) 533–6061 FAX (561) 588–4780

© 2003 EASTERN METAL SUPPLY, INC.

BERTHA HV™
Accordion Shutter System

REV. No	DESCRIPTION	DATE
1		
2		
3		
4		
5		
6		

Drawn by: F.P.
DATE: 07/19/07
DRAWING No **07–195**
SHEET **9 OF 26**

SEE END WALL CONNECTION DETAILS ON SHEETS 11 & 20

INSTALLATION (1) HV BLADE W/ HD CENTERMATES (31), (32), (33)

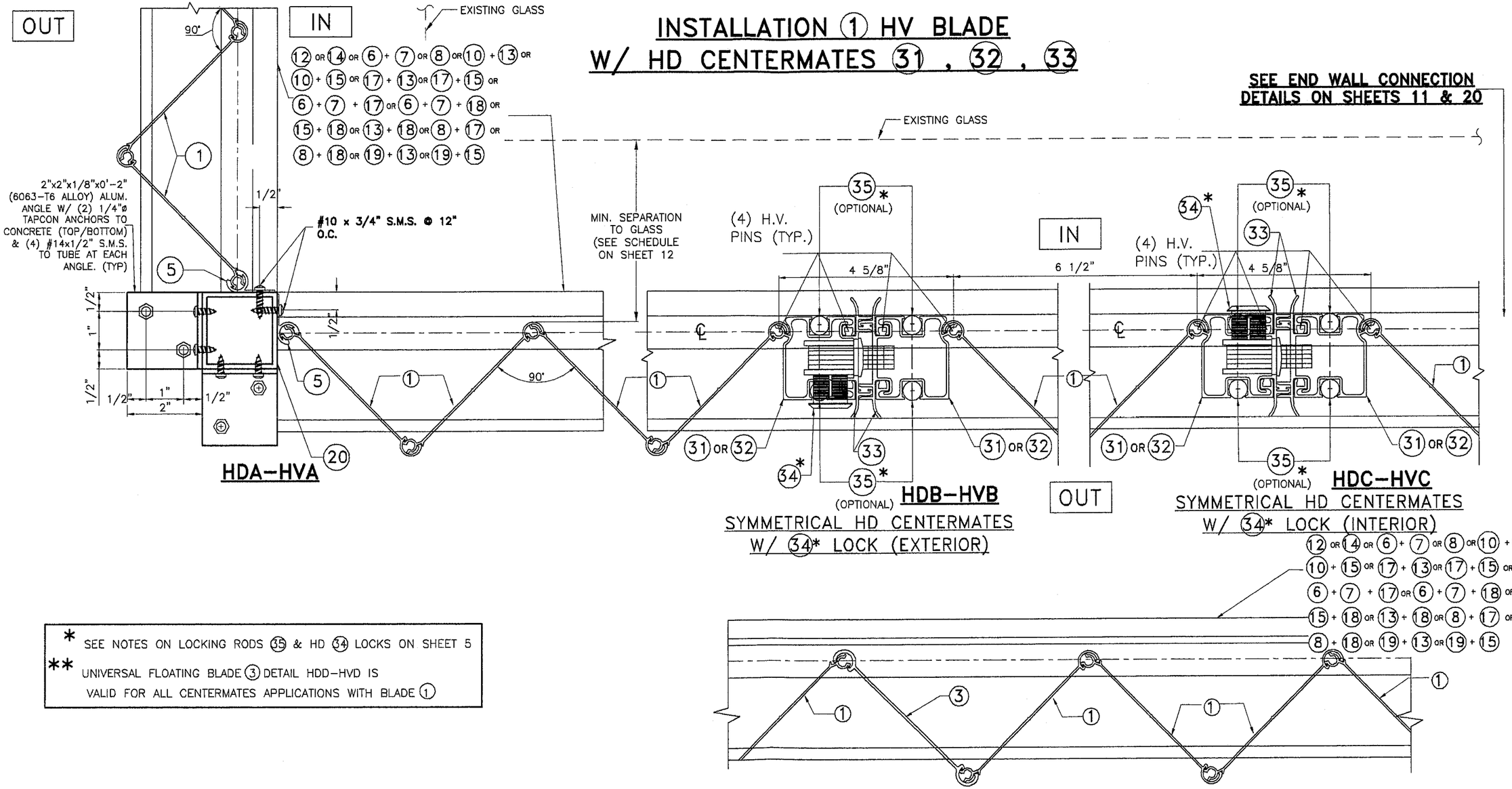

* SEE NOTES ON LOCKING RODS (35) & HD (34) LOCKS ON SHEET 5

** UNIVERSAL FLOATING BLADE (3) DETAIL HDD-HVD IS VALID FOR ALL CENTERMATES APPLICATIONS WITH BLADE (1)

HDD-HVD**

F.B.C.(**H**igh **V**elocity **H**urricane **Z**one)

Approved as complying with the Florida Building Code
Date 02/28/2008
NOA# 07-0817.09
Miami Dade Product Control Division
by

MIAMI-DADE COUNTY

JUL 20 2007

P.E. SEAL/SIGNATURE/DATE

TILTECO INC.

TILLIT TESTING & ENGINEERING COMPANY
6355 N.W. 36th. St., Ste. 305, VIRGINIA GARDENS, FLORIDA 33166
Phone : (305)871-1530 . Fax : (305)871-1531
e-mail: tilteco@aol.com
EB-0006719
WALTER A. TILLIT Jr. P. E.
FLORIDA Lic. # 44167

EASTERN METAL SUPPLY, INC.
(ASSA # 1)
3600 23rd AVENUE SOUTH
LAKEWORTH, FL 33461
PH (561) 533-6061 FAX (561) 588-4780

© 2003 EASTERN METAL SUPPLY, INC.

BERTHA HV ™
Accordion Shutter System

REV. No	DESCRIPTION	DATE
1		
2		
3		
4		
5		
6		

Drawn by: F.P.
DATE: 07/19/07
DRAWING No 07-195
SHEET 10 OF 26

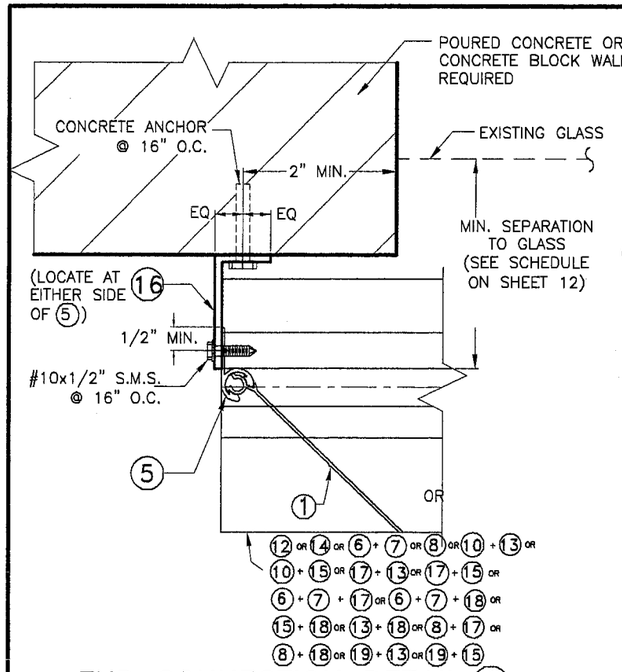

END CONNECTION DETAIL 1

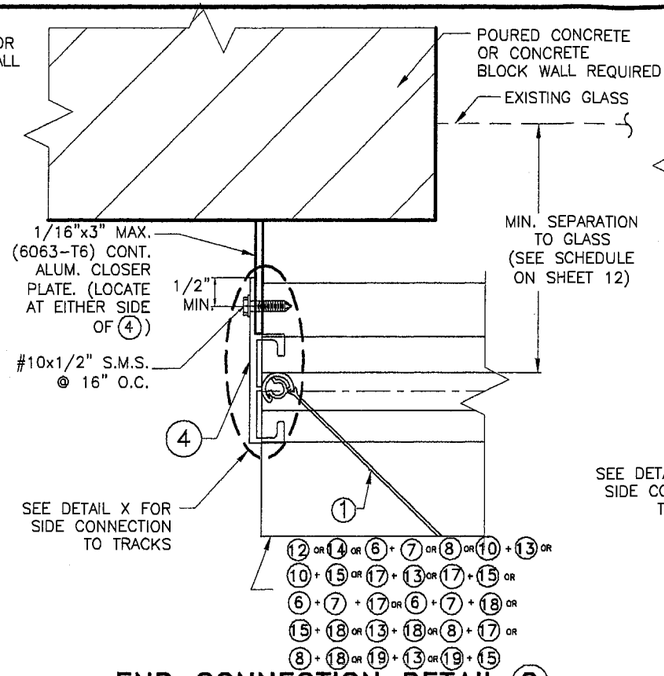

END CONNECTION DETAIL 2

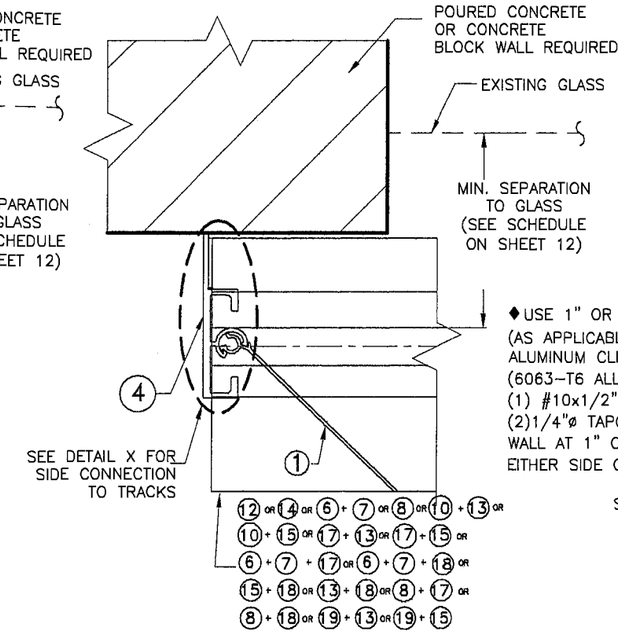

END CONNECTION DETAIL 3

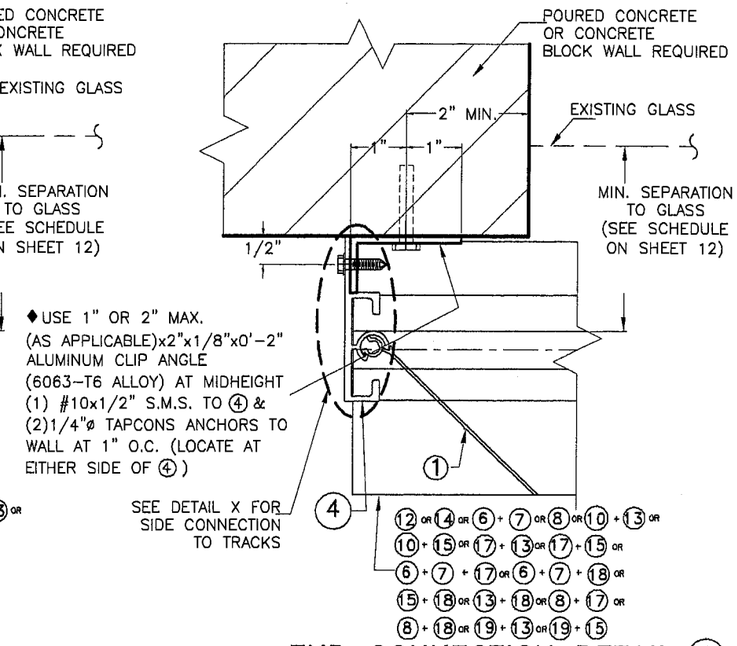

END CONNECTION DETAIL 4

◆ REQUIRED ONLY FOR SPANS GREATER THAN 12'-0"

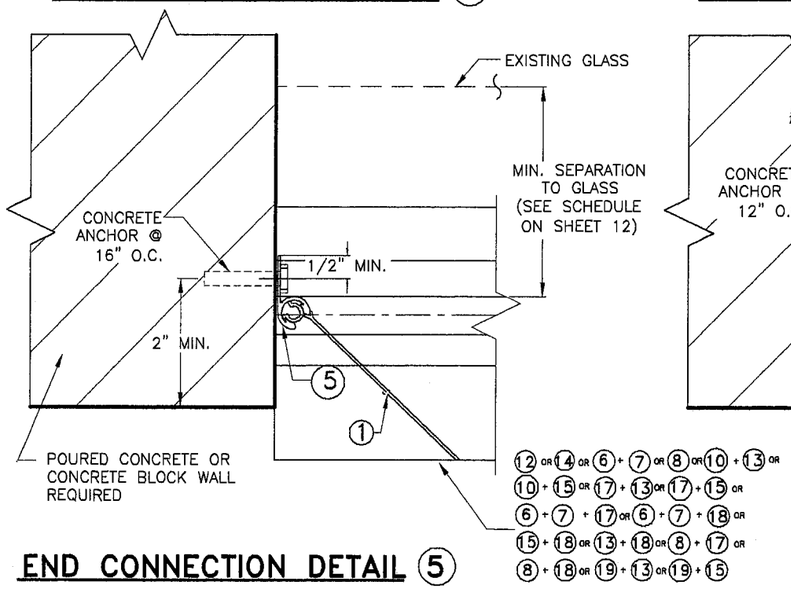

END CONNECTION DETAIL 5

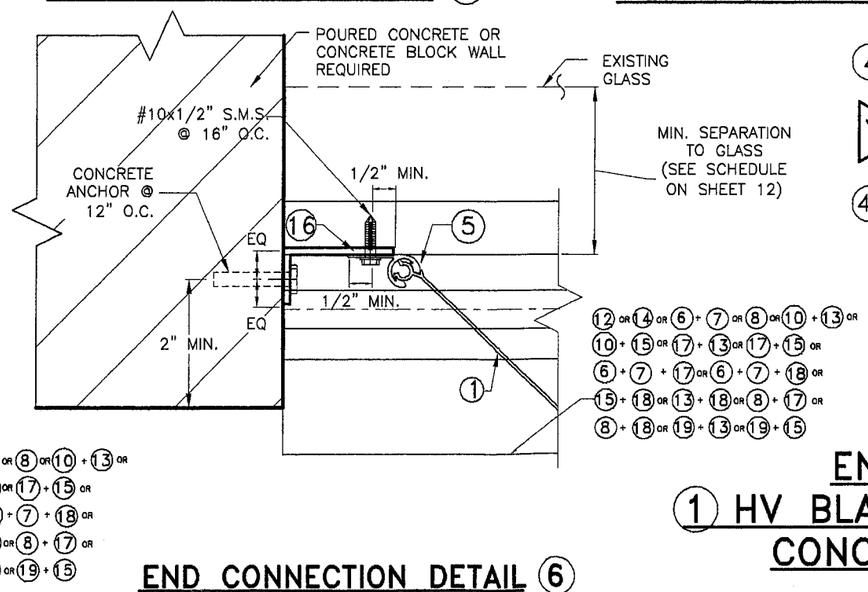

END CONNECTION DETAIL 6

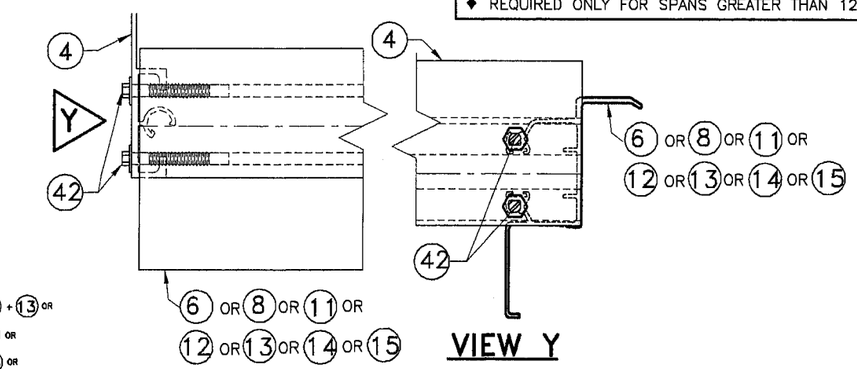

PLAN

DETAIL X

VIEW Y

END INSTALLATION
1 HV BLADE INTO CONCRETE OR CONCRETE BLOCK WALL.

F.B.C.(**H**igh **V**elocity **H**urricane **Z**one)

Approved as complying with the Florida Building Code
Date 02/28/2008
NOA# 07-0817.09
Miami-Dade Product Control Division
By: [signature]

MIAMI-DADE COUNTY

JUL 20 2007

P.E. SEAL/SIGNATURE/DATE

TILTECO INC.
TILLIT TESTING & ENGINEERING COMPANY
8355 N.W. 36th. St., Ste. 305, VIRGINIA GARDENS, FLORIDA 33166
Phone : (305)871-1530 . Fax : (305)871-1531
e-mail: tilteco@aol.com
EB-0006719
WALTER A. TILLIT Jr. P. E.
FLORIDA Lic. # 44167

EASTERN METAL SUPPLY, INC.
(ASSA # 1)
3600 23rd AVENUE SOUTH
LAKEWORTH, FL 33461
PH (561) 533-6061 FAX (561) 588-4780

© 2003 EASTERN METAL SUPPLY, INC.

BERTHA HV™
Accordion Shutter System

REV. No	DESCRIPTION	DATE
1		
2		
3		
4		
5		
6		

Drawn by: F.P.
DATE: 07/19/07
DRAWING No 07-195
SHEET 11 OF 26

SCHEDULE #1

MAXIMUM SHUTTER SPAN* "L+" OR "L−" (ft.) FOR INSTALLATIONS W/ **SYMMETRICAL CENTERMATES**, 21 & 22 or 31 or 32 W/ ONE HV LOCK 24 or 25 or 26 or HD LOCK 34 W/ NO LOCKING RODS 35 OR CENTERMATES 28 & 29 W/ ONE HV LOCK 30 W/ TWO LOCKING RODS 35 TOP & BOTTOM ♦(SEE NOTE †)

MAXIMUM DESIGN LOAD (p.s.f.) (+ OR −)	CONCRETE & WOOD INSTALLATIONS ▲			
	WALL MOUNTING		FLOOR/CEILING MOUNTING	
	L + (ft)	L - (ft)	L + (ft)	L - (ft)
30	13'−2"	16'−0"	13'−2"	16'−0"
35	12'−8"	14'−10"	12'−8"	14'−10"
40	12'−3"	13'−10"	12'−3"	13'−10"
45	11'−11"	13'−1"	11'−11"	13'−1"
50	11'−7"	12'−5"	11'−7"	12'−5"
55	11'−4"	11'−10"	11'−4"	11'−10"
60	11'−1"	11'−4"	11'−0"	11'−4"
65	10'−10"	10'−10"	10'−7"	10'−10"
70	10'−6"	10'−6"	10'−2"	10'−6"
75	10'−1"	10'−1"	9'−10"	10'−1"
80	9'−10"	9'−9"	9'−7"	9'−10"
85	9'−6"	9'−6"	9'−3"	9'−6"
90	9'−3"	9'−3"	9'−0"	9'−3"
95	9'−0"	8'−9"	8'−9"	9'−0"
100	8'−9"	8'−4"	8'−6"	8'−9"
105	8'−7"	7'−11"	8'−4"	8'−4"
110	8'−4"	7'−7"	8'−2"	7'−11"
115	8'−2"	7'−3"	8'−0"	7'−7"
120	8'−0"	6'−11"	7'−10"	7'−4"
125	7'−10"	6'−8"	7'−8"	7'−0"
130	7'−8"	6'−5"	7'−6"	6'−9"
135	7'−7"	6'−2"	7'−4"	6'−6"
140	7'−5"	5'−11"	7'−3"	6'−3"
145	7'−3"	5'−9"	7'−1"	6'−0"
150	7'−2"	5'−7"	7'−0"	5'−10"
155	7'−0"	5'−5"	6'−10"	5'−8"
160	6'−11"	5'−2"	6'−9"	5'−6"
165	6'−10"	5'−1"	6'−8"	5'−4"
170	6'−9"	4'−11"	6'−7"	5'−2"
175	6'−7"	4'−9"	6'−5"	5'−0"
180	6'−6"	4'−8"	6'−4"	4'−10"
185	6'−5"	4'−6"	6'−3"	4'−9"
190	6'−4"	4'−5"	6'−2"	4'−7"
195	6'−3"	4'−3"	6'−1"	4'−6"
200	6'−2"	4'−2"	6'−0"	4'−5"
205	6'−0"	4'−1"	6'−0"	4'−3"

SCHEDULE #2

MAXIMUM SHUTTER SPAN* "L+" OR "L−" (ft.) FOR INSTALLATIONS W/ **OPPOSING CENTERMATES**, 21 & 22 ONE HV LOCK 24 OR 25 OR 26 W/ NO LOCKING RODS 35 ♦(SEE NOTE †)

MAXIMUM DESIGN LOAD (p.s.f.) (+ OR −)	CONCRETE & WOOD INSTALLATIONS ▲	
	WALL MOUNTINGS & FLOOR/CEILING MOUNTINGS	
	L + (ft)	L - (ft)
30	12'−3"	14'−9"
35	11'−9"	13'−8"
40	11'−4"	12'−9"
45	11'−1"	12'−0"
50	10'−9"	11'−5"
55	10'−6"	10'−11"
60	10'−3"	10'−5"
65	10'−0"	10'−0"
70	9'−8"	9'−8"
75	9'−4"	9'−4"
80	9'−0"	9'−0"
85	8'−9"	8'−9"
90	8'−6"	8'−6"
95	8'−3"	8'−3"
100	8'−1"	8'−1"
105	7'−11"	7'−11"
110	7'−8"	7'−7"
115	7'−6"	7'−3"
120	7'−4"	6'−11"
125	7'−3"	6'−8"
130	7'−1"	6'−5"
135	6'−11"	6'−2"
140	6'−10"	5'−11"
145	6'−8"	5'−9"
150	6'−7"	5'−7"
155	6'−6"	5'−5"
160	6'−5"	5'−2"
165	6'−3"	5'−1"
170	6'−2"	4'−11"
175	6'−1"	4'−9"
180	6'−0"	4'−8"
185	5'−11"	4'−6"
190	5'−10"	4'−5"
195	5'−9"	4'−3"
200	5'−9"	4'−2"
205	5'−8"	4'−1"

SCHEDULE #3

MAXIMUM SHUTTER SPAN* "L+" OR "L−" (ft.) INSTALLATIONS W/ **SYMMETRICAL CENTERMATES**, 21 & 22 W/ TWO HV 24 OR 25 OR 26 LOCKS OR TWO LOCKING RODS 35 TOP/BOTTOM W/ ONE HV LOCK 24 OR 25 OR 26♦ (SEE NOTE †)

MAXIMUM DESIGN LOAD (p.s.f.) (+ OR −)	CONCRETE & WOOD INSTALLATIONS ▲	
	FLOOR/CEILING MOUNTING	
	L + (ft)	L - (ft)
30	13'−1"	16'−0"
35	12'−7"	15'−7"
40	12'−2"	15'−2"
45	11'−9"	14'−3"
50	11'−6"	13'−7"
55	11'−3"	12'−11"
60	11'−0"	12'−4"
65	10'−9"	11'−11"
70	10'−7"	11'−5"
75	10'−4"	11'−1"
80	10'−0"	10'−9"
85	9'−9"	10'−5"
90	9'−5"	10'−1"
95	9'−2"	9'−10"
100	9'−0"	9'−7"
105	8'−9"	9'−4"
110	8'−7"	9'−2"
115	8'−4"	8'−11"
120	8'−2"	8'−9"
125	8'−0"	8'−5"
130	7'−10"	8'−1"
135	7'−9"	7'−9"
140	7'−7"	7'−6"
145	7'−5"	7'−3"
150	7'−4"	7'−0"
155	7'−2"	6'−9"
160	7'−1"	6'−7"
165	7'−0"	6'−4"
170	6'−11"	6'−2"
175	6'−9"	6'−0"
180	6'−8"	5'−10"
185	6'−7"	5'−8"
190	6'−6"	5'−6"
195	6'−5"	5'−5"
200	6'−4"	5'−3"
205	6'−3"	5'−1"

* NOTES:

(1) L+: MAXIMUM ALLOWABLE SPAN FOR A GIVEN POSITIVE DESIGN LOAD.
L−: MAX. ALLOWABLE SPAN FOR A GIVEN NEGATIVE DESIGN LOAD.

(2) PROCEDURE TO DETERMINE MAXIMUM SPAN FOR WALL MOUNTINGS OR FLOOR/CEILING:

GIVEN A POSITIVE DESIGN LOAD, DETERMINE MAXIMUM SPAN "L+" FROM SCHEDULE.
GIVEN A NEGATIVE DESIGN LOAD, DETERMINE MAXIMUM SPAN "L−" FROM SCHEDULE.

FINAL MAXIMUM ALLOWABLE SPAN IS EQUAL TO THE MINIMUM DETERMINED SPAN BETWEEN "L+" AND "L−".

(3) PROCEDURE TO DETERMINE MAXIMUM SPAN FOR COMBINATIONS IN BETWEEN WALL W/ FLOOR/CEILING MOUNTINGS:

FOR A GIVEN POSITIVE DESIGN LOAD:
DETERMINE:
L_1+= MAX. SPAN FOR WALL MOUNTING INSTALLATIONS.
L_2+= MAX. SPAN FOR FLOOR/CEILING MOUNTING INSTALLATIONS.

FOR A GIVEN NEGATIVE DESIGN LOAD:
DETERMINE:
L_1−= MAX. SPAN FOR WALL MOUNTING INSTALLATIONS.
L_2−= MAX. SPAN FOR FLOOR/CEILING MOUNTING INSTALLATIONS.

FINAL MAXIMUM ALLOWABLE SPAN IS EQUAL TO THE MINIMUM BETWEEN "L_1+", "L_2+", "L_1−" AND "L_2−"

(4) GO TO ANCHOR SCHEDULE WITH FINAL MAXIMUM ALLOWABLE SPAN AND NEGATIVE DESIGN LOAD TO DETERMINE MAXIMUM ANCHOR SPACING.

▲ MAXIMUM SHUTTER SPAN "L+" OR "L−" FOR INSTALLATIONS INTO WOOD SHALL BE LIMITED TO 105 psf. DESIGN LOAD.

† H.V. CORNER CENTERMATE #3 MAY BE USED AT ALL MOUNTING INSTALLATIONS. LOCKING SPECIFICATIONS SHALL BE AS INDICATED ON MANDATORY CONDITION #2 NOTE #5, SHEET 5 OF 26.

♦ SEPARATION TO GLASS REQUIREMENTS

(1) SEE BELOW FOR MINIMUM SEPARATION TO GLASS SCHEDULE FOR SHUTTERS INSTALLED WITHIN THE FIRST 30'−0" ELEVATION OF BUILDING MEASURED AT BOTTOM OF SHUTTER.

(2) MINIMUM SEPARATION TO GLASS FOR SHUTTERS INSTALLED ABOVE 30'−0" ELEVATION OF BUILDING, MEASURED AT BOTTOM OF SHUTTER IS 3".

MINIMUM SEPARATION TO GLASS SCHEDULE:
SHUTTER W/ ONE LOCK WITHOUT LOCKING RODS

SHUTTER SPAN	INSTALLATION W/ **SYMMETRICAL** CENTERMATES	INSTALLATION W/ **OPPOSING** CENTERMATES
105" OR LESS	3 5/16"▲	4"
>105" TO MAX. ALLOWED	3 7/8"▲	4"

▲USE 2 1/2" FOR HD LOCK 31+33 OR 32+33 , USE INDICATED VALUES FOR HV CENTERMATES.

MINIMUM SEPARATION TO GLASS SCHEDULE:
SHUTTER W/ ONE LOCK & TWO LOCKING RODS OR WITH ONLY TWO LOCKS

SHUTTER SPAN	INSTALLATION W/ **SYMMETRICAL** CENTERMATES	INSTALLATION W/ **OPPOSING** CENTERMATES
105" OR LESS	2 3/4" **	3 3/16"
>105" TO MAX. ALLOWED	3 1/4" ***	3 1/4"

** USE 2 15/16" FOR HV "T" LOCK 30 W/ 35
*** USE 4 1/8" FOR HV "T" LOCK 30 W/ 35
USE INDICATED VALUES FOR HV CENTERMATES.

INSTALLATION LEGEND

	CONCRETE & MANSORY	WOOD
WALL MOUNTING	A, B, C, D, E, F, K & L.	M, N, O, P, Q, R, S & V.
FLOOR/CEILING MOUNTING	G, H, I & J.	T, U, W & X.

1 HV BLADE

F.B.C.(**H**igh **V**elocity **H**urricane **Z**one)

Approved as complying with the Florida Building Code
Date 02/28/2008
NOAC 07-0817.09
Miami Dade Product Control Division
By Helena A. Melo

MIAMI-DADE COUNTY

JUL 20 2007

P.E. SEAL/SIGNATURE/DATE

TILTECO INC.
TILLIT TESTING & ENGINEERING COMPANY
6355 N.W. 36th. St., Ste. 305, VIRGINIA GARDENS, FLORIDA 33166
Phone : (305)871-1530 . Fax : (305)871-1531
e-mail: tilteco@aol.com
EB-0006719
WALTER A. TILLIT Jr. P. E.
FLORIDA Lic. # 44167

EASTERN METAL SUPPLY, INC.
(ASSA # 1)
3600 23rd AVENUE SOUTH
LAKEWORTH, FL 33461
PH (561) 533-6061 FAX (561) 588-4780

© 2003 EASTERN METAL SUPPLY, INC.

BERTHA HV ™
Accordion Shutter System

REV. No	DESCRIPTION	DATE
1		
2		
3		
4		
5		
6		

Drawn by: F.P.
DATE: 07/19/07
DRAWING No **07-195**
SHEET **12 OF 26**

ANCHORS SPACING LEGEND

TAPCON
ALL POINTS SOLID-SET
WEDGE-BOLT

MAXIMUM DESIGN PRESSURE RATING (p.s.f.) AND CORRESPONDING MAXIMUM ANCHOR* SPACING (in.) SCHEDULE FOR A GIVEN MAX. SHUTTER SPAN, DESIGN NEGATIVE LOAD AND A CORRESPONDING MOUNTING TYPE FOR CONCRETE OR CONCRETE BLOCK INSTALLATIONS

(SEE MOUNTINGS A, B, C, D AND F ON SHEET 6)

* SEE ANCHOR SPECIFICATIONS ON SHEET 14

POURED CONCRETE (NEGATIVE DESIGN LOAD (psf))

MAXIMUM SPAN (ft)	Ⓐ WALL HEADER MOUNTING W/⑫								Ⓐ WALL HEADER MOUNTING W/⑭								Ⓑ WALL HEADER MOUNTING							
	30	40	60	75	90	120	160	205	30	40	60	75	90	120	160	205	30	40	60	75	90	120	160	205
3'-0" OR LESS	14	12	10	9	8	8	6	6	14	12	10	9	8	8	6	6	14	12	10	9	8	8	6	6
	14	12	10	9	8	8	6	6	14	12	10	9	8	8	6	6	14	12	10	9	8	8	6	6
	14	12	10	9	8	8	6	6	14	12	10	9	8	8	6	6	14	12	10	9	8	8	6	6
4'-0"	14	12	10	9	8	8	6	3.5	14	12	10	9	8	8	6	6	14	12	10	9	8	8	6	6
	14	12	10	9	8	8	6	4	14	12	10	9	8	8	6	6	14	12	10	9	8	8	6	6
	14	12	10	9	8	8	6	6	14	12	10	9	8	8	6	6	14	12	10	9	8	8	6	6
5'-0"	14	12	10	9	8	8	4	3	14	12	10	9	8	8	6	3	14	12	10	9	8	8	6	6
	14	12	10	9	8	8	5.5	–	14	12	10	9	8	8	6	3.5	14	12	10	9	8	8	6	6
	14	12	10	9	8	8	6	4.5	14	12	10	9	8	8	6	6	14	12	10	9	8	8	6	6
6'-0"	14	12	10	9	8	5	3	–	14	12	10	9	8	8	3.5	–	14	12	10	9	8	8	6	5
	14	12	10	9	8	5.5	–	–	14	12	10	9	8	8	4.5	–	14	12	10	9	8	8	6	6
	14	12	10	9	8	8	5	3.5	14	12	10	9	8	8	6	4	14	12	10	9	8	8	6	6
7'-0"	14	12	10	9	7	3.5	–	–	14	12	10	9	8	5.5	–	–	14	12	10	9	8	8	6	4
	14	12	10	9	8	4	–	–	14	12	10	9	8	6.5	3	–	14	12	10	9	8	8	6	5
	14	12	10	9	8	6.5	4	–	14	12	10	9	8	8	5	–	14	12	10	9	8	8	6	6
8'-0"	14	12	10	8	5	3	–	–	14	12	10	8	8	3.5	–	–	14	12	10	9	8	8	5	–
	14	12	10	9	5.5	–	–	–	14	12	10	9	8	4.5	–	–	14	12	10	9	8	8	6	–
	14	12	10	9	8	5	–	–	14	12	10	9	8	7	–	–	14	12	10	9	8	8	6	–
9'-0"	14	12	10	5.5	3.5	–	–	–	14	12	10	9	6.5	–	–	–	14	12	10	9	8	6.5	–	–
	14	12	10	6.5	4	–	–	–	14	12	10	9	7.5	3	–	–	14	12	10	9	8	7.5	–	–
	14	12	10	9	7	4	–	–	14	12	10	9	8	5.5	–	–	14	12	10	9	8	8	–	–
10'-0"	14	12	8	4.5	3	–	–	–	14	12	10	9	4.5	–	–	–	14	12	10	9	8	–	–	–
	14	12	9.5	5	3.5	–	–	–	14	12	10	9	5.5	–	–	–	14	12	10	9	8	–	–	–
	14	12	10	8.5	5.5	–	–	–	14	12	10	9	8	–	–	–	14	12	10	9	8	–	–	–
11'-0"	14	12	6	3.5	–	–	–	–	14	12	10	6	–	–	–	–	14	12	10	9	–	–	–	–
	14	12	7	4	–	–	–	–	14	12	10	7	–	–	–	–	14	12	10	9	–	–	–	–
	14	12	10	7	–	–	–	–	14	12	10	9	–	–	–	–	14	12	10	9	–	–	–	–
12'-0"	14	12	5	–	–	–	–	–	14	12	10	–	–	–	–	–	14	12	10	–	–	–	–	–
	14	12	5.5	–	–	–	–	–	14	12	10	–	–	–	–	–	14	12	10	–	–	–	–	–
	14	12	9	–	–	–	–	–	14	12	10	–	–	–	–	–	14	12	10	–	–	–	–	–
13'-0"	14	12	4	–	–	–	–	–	14	12	7.5	–	–	–	–	–	14	12	10	–	–	–	–	–
	14	12	4.5	–	–	–	–	–	14	12	9	–	–	–	–	–	14	12	10	–	–	–	–	–
	14	12	7.5	–	–	–	–	–	14	12	10	–	–	–	–	–	14	12	10	–	–	–	–	–
14'-0"	14	10.5	3.5	–	–	–	–	–	14	12	5.5	–	–	–	–	–	14	12	10	–	–	–	–	–
	14	12	4	–	–	–	–	–	14	12	6.5	–	–	–	–	–	14	12	10	–	–	–	–	–
	14	12	6.5	–	–	–	–	–	14	12	10	–	–	–	–	–	14	12	10	–	–	–	–	–
15'-0"	14	8.5	–	–	–	–	–	–	14	12	–	–	–	–	–	–	14	12	–	–	–	–	–	–
	14	9.5	–	–	–	–	–	–	14	12	–	–	–	–	–	–	14	12	–	–	–	–	–	–
	14	12	–	–	–	–	–	–	14	12	–	–	–	–	–	–	14	12	–	–	–	–	–	–
16'-0"	14	–	–	–	–	–	–	–	14	–	–	–	–	–	–	–	14	–	–	–	–	–	–	–
	14	–	–	–	–	–	–	–	14	–	–	–	–	–	–	–	14	–	–	–	–	–	–	–
	14	–	–	–	–	–	–	–	14	–	–	–	–	–	–	–	14	–	–	–	–	–	–	–

POURED CONCRETE/CONCRETE BLOCK (NEGATIVE DESIGN LOAD (psf))

MAXIMUM SPAN (ft)	Ⓓ WALL SILL MOUNTING W/ ⑫								Ⓓ WALL SILL MOUNTING W/ ⑭								Ⓒ & Ⓕ WALL HEADER/SILL MOUNTING							
	30	40	60	75	90	120	160	205	30	40	60	75	90	120	160	205	30	40	60	75	90	120	160	205
3'-0" OR LESS	14	12	10	9	8	8	6	3	14	12	10	9	8	8	6	3	8	8	8	8	8	8	7.5	6
	14	12	10	9	8	8	6	6	14	12	10	9	8	8	6	6	8	8	8	8	8	8	8	8
	14	12	10	9	8	8	6	4.5	14	12	10	9	8	8	6	6	8	8	8	8	8	8	8	8
4'-0"	14	12	10	9	8	7.5	3	–	14	12	10	9	8	7.5	5.5	–	8	8	8	8	8	7.5	5.5	4.5
	14	12	10	9	8	8	5.5	–	14	12	10	9	8	8	6	5	8	8	8	8	8	8	8	8
	14	12	10	9	8	8	4	–	14	12	10	9	8	8	6	3.5	8	8	8	8	8	8	8	8
5'-0"	14	12	10	9	8	3	–	–	14	12	10	9	8	6	–	–	8	8	8	8	8	6	4.5	3
	14	12	10	9	8	7	–	–	14	12	10	9	8	8	6	–	8	8	8	8	8	8	8	8
	14	12	10	9	8	5	–	–	14	12	10	9	8	8	4	–	8	8	8	8	8	8	7	6
6'-0"	14	12	10	8	4	–	–	–	14	12	10	8	6.5	3.5	–	–	8	8	8	8	6.5	5	3.5	–
	14	12	10	9	8	4	–	–	14	12	10	9	8	8	3	–	8	8	8	8	8	8	8	6
	14	12	10	9	7.5	3	–	–	14	12	10	9	8	7	–	–	8	8	8	8	8	8	5	4.5
7'-0"	14	12	9	5	–	–	–	–	14	12	8	7	5.5	–	–	–	8	8	8	7	5.5	4	–	–
	14	12	10	9	6	–	–	–	14	12	10	9	8	5	–	–	8	8	8	8	8	8	7.5	4.5
	14	12	10	9	4	–	–	–	14	12	10	9	8	3.5	–	–	8	8	8	8	8	8	5.5	3.5
8'-0"	14	11.5	7	3	–	–	–	–	14	11.5	7	6	3.5	–	–	–	8	8	7.5	6	5	3.5	–	–
	14	12	10	7	4	–	–	–	14	12	10	9	8	3	–	–	8	8	8	8	8	7.5	5.5	3.5
	14	12	10	5	3	–	–	–	14	12	10	9	7	–	–	–	8	8	8	8	8	5.5	4	–
9'-0"	13.5	10	4	–	–	–	–	–	13.5	10	6.5	5	–	–	–	–	8	8	6.5	5.5	4.5	3	–	–
	14	12	10	5	–	–	–	–	14	12	10	9	5.5	–	–	–	8	8	8	8	8	6.5	4.5	3
	14	12	7.5	3.5	–	–	–	–	14	12	10	9	4	–	–	–	8	8	8	8	8	4.5	3	–
10'-0"	12	9	3	–	–	–	–	–	12	9	6	3	–	–	–	–	8	8	6	4.5	4	–	–	–
	14	12	7	3.5	–	–	–	–	14	12	10	8	4	–	–	–	8	8	8	8	8	5.5	4	–
	14	12	5	–	–	–	–	–	14	12	10	5.5	–	–	–	–	8	8	8	8	7.5	4	–	–
11'-0"	11	8.5	–	–	–	–	–	–	11	8	5.5	–	–	–	–	–	8	8	5.5	4.5	3.5	–	–	–
	14	12	5	3.5	–	–	–	–	14	12	10	5	–	–	–	–	8	8	8	8	8	4.5	3.5	–
	14	12	3.5	–	–	–	–	–	14	12	10	3.5	–	–	–	–	8	8	8	8	6.5	3	–	–
12'-0"	10	7.5	–	–	–	–	–	–	10	7.5	3.5	–	–	–	–	–	8	7.5	5	4	3	–	–	–
	14	12	4	–	–	–	–	–	14	12	10	–	–	–	–	–	8	8	8	8	7.5	4	3	–
	14	12	3	–	–	–	–	–	14	12	7	–	–	–	–	–	8	8	8	7.5	5.5	3	–	–
13'-0"	9	5	–	–	–	–	–	–	9.5	7	–	–	–	–	–	–	8	7	4.5	3.5	–	–	–	–
	14	12	4	–	–	–	–	–	14	12	6.5	–	–	–	–	–	8	8	8	8	6.5	3.5	–	–
	14	9	–	–	–	–	–	–	14	12	4.5	–	–	–	–	–	8	8	8	7	4.5	–	–	–
14'-0"	8.5	3.5	–	–	–	–	–	–	8.5	6.5	–	–	–	–	–	–	8	6.5	4	3	–	–	–	–
	14	9	4	–	–	–	–	–	14	12	6	–	–	–	–	–	8	8	8	8	5.5	3	–	–
	14	6.5	–	–	–	–	–	–	14	12	3.5	–	–	–	–	–	8	8	8	6	4	–	–	–
15'-0"	8	3	–	–	–	–	–	–	8	6	–	–	–	–	–	–	8	6	4	–	–	–	–	–
	14	7	–	–	–	–	–	–	14	12	–	–	–	–	–	–	8	8	8	7	5	3	–	–
	14	5	–	–	–	–	–	–	14	11.5	–	–	–	–	–	–	8	8	7.5	5	3.5	–	–	–
16'-0"	7.5	–	–	–	–	–	–	–	7.5	–	–	–	–	–	–	–	7.5	6	4	–	–	–	–	–
	14	–	–	–	–	–	–	–	14	–	–	–	–	–	–	–	8	8	8	6.5	4.5	3	–	–
	14	–	–	–	–	–	–	–	14	–	–	–	–	–	–	–	8	8	7	4.5	3	–	–	–

① HV BLADE

F.B.C.(**H**igh **V**elocity **H**urricane **Z**one)

Approved as complying with the Florida Building Code
Date 02/28/2008
NOA# 07-0817.09
Miami-Dade Product Control Division
By [signature]

MIAMI-DADE COUNTY

JUL 20 2007

P.E. SEAL/SIGNATURE/DATE

TILTECO INC.
TILLIT TESTING & ENGINEERING COMPANY
6355 N.W. 36th. St., Ste. 305, VIRGINIA GARDENS, FLORIDA 33166
Phone : (305)871-1530 . Fax : (305)871-1531
e-mail: tiltecoaol.com
EB-0006719
WALTER A. TILLIT Jr. P. E.
FLORIDA Lic. # 44167

EASTERN METAL SUPPLY, INC.
(ASSA # 1)
3600 23rd AVENUE SOUTH
LAKEWORTH, FL 33461
PH (561) 533-6061 FAX (561) 588-4780

© 2003 EASTERN METAL SUPPLY, INC.

BERTHA HV™
Accordion Shutter System

REV. No	DESCRIPTION	DATE
1		
2		
3		
4		
5		
6		

Drawn by: F.P.
DATE: 07/19/07
DRAWING No 07-195

ANCHORS SPACING LEGEND

TAPCON
ALL POINTS SOLID-SET
WEDGE-BOLT

MAXIMUM DESIGN PRESSURE RATING (p.s.f.) AND CORRESPONDING MAXIMUM ANCHOR* SPACING (in.) SCHEDULE FOR A GIVEN MAX. SHUTTER SPAN, DESIGN NEGATIVE LOAD AND A CORRESPONDING MOUNTING TYPE FOR CONCRETE INSTALLATIONS

(SEE MOUNTINGS E, G, & H ON SHEETS 6 & 7).

MAXIMUM SPAN (ft)	POURED CONCRETE/CONCRETE BLOCK								POURED CONCRETE															
	(E) WALL SILL MOUNTING								(G) CEILING MOUNTING								(H) FLOOR MOUNTING							
	NEGATIVE DESIGN LOAD (psf)								NEGATIVE DESIGN LOAD (psf)								NEGATIVE DESIGN LOAD (psf)							
	30	40	60	75	90	120	160	205	30	40	60	75	90	120	160	205	30	40	60	75	90	120	160	205
3'-0" OR LESS	14	12	10	9	8	8	6	6	14	12	10	9	8	8	6	6	14	12	10	9	8	8	6	6
	14	12	10	9	8	8	6	6	14	12	10	9	8	8	6	6	14	12	10	9	8	8	6	6
	14	12	10	9	8	8	6	6	14	12	10	9	8	8	6	6	14	12	10	9	8	8	6	6
4'-0"	14	12	10	9	8	7.5	5.5	3.5	14	12	10	9	8	8	6	6	14	12	10	9	8	8	6	5
	14	12	10	9	8	8	6	6	14	12	10	9	8	8	6	6	14	12	10	9	8	8	6	5.5
	14	12	10	9	8	8	6	6	14	12	10	9	8	8	6	6	14	12	10	9	8	8	6	6
5'-0"	14	12	10	9	8	6	4	–	14	12	10	9	8	8	6	5	14	12	10	9	8	7	5	4
	14	12	10	9	8	8	6	6	14	12	10	9	8	8	6	5.5	14	12	10	9	8	8	6	4.5
	14	12	10	9	8	8	6	4	14	12	10	9	8	8	6	6	14	12	10	9	8	8	6	6
6'-0"	14	12	10	8	7	5	–	–	14	12	10	9	8	7.5	5.5	4	14	12	10	9	7.5	5.5	4	3
	14	12	10	9	8	8	6	4.5	14	12	10	9	8	8	6	5	14	12	10	9	8	6.5	5	3.5
	14	12	10	9	8	8	5	3	14	12	10	9	8	8	6	6	14	12	10	9	8	8	6	5.5
7'-0"	14	12	9	7	6	3.5	–	–	14	12	10	9	8	6	4.5	3.5	14	12	10	8	6.5	5	3.5	–
	14	12	10	9	8	8	5	3.5	14	12	10	9	8	7	5	4	14	12	10	9	7.5	5.5	4	3
	14	12	10	9	8	6.5	3.5	–	14	12	10	9	8	8	6	6	14	12	10	9	8	8	6	4.5
8'-0"	14	11.5	7.5	6	5	–	–	–	14	12	10	9	7.5	5.5	4	–	14	12	8.5	7	5.5	4	3	–
	14	12	10	9	8	6.5	4	–	14	12	10	9	8	6	4.5	–	14	12	10	8	6.5	5	3.5	–
	14	12	10	9	8	5	3	–	14	12	10	9	8	8	6	–	14	12	10	9	8	7	5	–
9'-0"	13.5	10	7	5.5	4	–	–	–	14	12	10	8	6.5	5	–	–	14	11.5	7.5	6	5	3.5	–	–
	14	12	10	9	8	5.5	–	–	14	12	10	9	7.5	5.5	–	–	14	12	8.5	7	5.5	4	–	–
	14	12	10	9	7	4	–	–	14	12	10	9	8	8	–	–	14	12	10	9	8	6	–	–
10'-0"	12	9	6	4.5	3	–	–	–	14	12	9	7	6	4.5	–	–	14	10.5	7	5.5	4.5	3.5	–	–
	14	12	10	9	7.5	–	–	–	14	12	10	8	6.5	5	–	–	14	12	8	6	5	4	–	–
	14	12	10	8	5.5	–	–	–	14	12	10	9	8	7	–	–	14	12	10	9	7.5	5.5	–	–
11'-0"	11	8.5	5.5	3.5	–	–	–	–	14	12	8	6.5	5	4	–	–	12.5	9.5	6	5	4	3	–	–
	14	12	10	9	–	–	–	–	14	12	9	7	6	4.5	–	–	14	10.5	7	5.5	4.5	3.5	–	–
	14	12	10	6.5	–	–	–	–	14	12	10	9	8	6.5	–	–	14	12	10	8	7	5	–	–
12'-0"	10	7.5	5	–	–	–	–	–	14	11	7.5	6	5	–	–	–	11.5	8.5	5.5	4.5	3.5	–	–	–
	14	12	10	–	–	–	–	–	14	12	8	6.5	5.5	–	–	–	13	10	6.5	5	4	–	–	–
	14	12	9	5.5	–	–	–	–	14	12	10	9	8	–	–	–	14	12	9.5	7.5	6	–	–	–
13'-0"	9.5	7	4	–	–	–	–	–	13.5	10	6.5	5.5	4.5	–	–	–	10.5	8	5	4	3.5	–	–	–
	14	12	10	–	–	–	–	–	14	11.5	7.5	6	5	–	–	–	12	9	6	4.5	4	–	–	–
	14	12	7.5	–	–	–	–	–	14	12	10	8.5	7	–	–	–	14	12	8.5	7	6	–	–	–
14'-0"	8.5	6.5	3.5	–	–	–	–	–	12.5	9.5	6	5	–	–	–	–	10	7.5	5	4	–	–	–	–
	14	12	9	–	–	–	–	–	14	10.5	7	5.5	–	–	–	–	11	8.5	5.5	4.5	–	–	–	–
	14	12	6.5	–	–	–	–	–	14	12	10	8	–	–	–	–	14	12	8	6.5	–	–	–	–
15'-0"	8	6	–	–	–	–	–	–	12	9	6	–	–	–	–	–	9	7	4.5	–	–	–	–	–
	14	12	–	–	–	–	–	–	13.5	10	6.5	–	–	–	–	–	10.5	8	5	–	–	–	–	–
	14	11	–	–	–	–	–	–	14	12	9.5	–	–	–	–	–	14	11.5	7.5	–	–	–	–	–
16'-0"	7.5	–	–	–	–	–	–	–	11	8	5.5	–	–	–	–	–	8.5	6.5	4	–	–	–	–	–
	14	–	–	–	–	–	–	–	12.5	9.5	6	–	–	–	–	–	10	7.5	5	–	–	–	–	–
	14	–	–	–	–	–	–	–	14	12	9	–	–	–	–	–	14	10.5	7	–	–	–	–	–

*SPECIFICATIONS ON ANCHOR REQUIREMENTS: POURED CONCRETE OR CONCRETE BLOCK SUBSTRATES

1. ANCHORS TO WALL SHALL BE AS FOLLOWS:
(A) TO EXISTING POURED CONCRETE: (Min. f'c = 3 ksi)
– 1/4"ø TAPCON ANCHORS, AS MANUFACTURED BY I.T.W. RAMSET/ RED HEAD.
– 1/4"ø x 3/4" ALL POINTS SOLID-SET ANCHORS AS DISTRIBUTED BY ALL POINTS SCREW, BOLT & SPECIALTY COMPANY.
– 1/4"ø WEDGE-BOLT ANCHORS AS MANUFACTURED BY POWERS FASTENING, INC.

NOTES:
A.1) MINIMUM EMBEDMENT INTO POURED CONCRETE OF TAPCON ANCHORS IS 1 3/4", AND 2" FOR WEDGE-BOLT ANCHORS.

A.2) MINIMUM EMBEDMENT OF 1/4"ø x 3/4" ALL POINTS SOLID-SET ANCHORS SHALL BE 7/8" INTO THE POURED CONCRETE. NO EMBEDMENT INTO STUCCO SHALL BE PERMITTED. 1/4" ø-20 S.S. MACHINE SCREW USED SHALL BE 1 1/2" LONG MINIMUM SHOULD STUCCO EXIST, AND 1" MINIMUM FOR WALLS WITH NO STUCCO.

A.3) IN CASE THAT PRECAST STONE, PRECAST CONCRETE PANELS, PAVERS OR ANY VENEER BE FOUND ON THE EXISTING WALL OR FLOOR, ANCHORS SHALL BE LONG ENOUGH TO REACH THE MAIN STRUCTURE BEHIND SAID WALL FINISHES. ANCHORAGE SHALL BE AS INDICATED ON NOTES A.1) & A.2) ABOVE. FOR INSTALLATIONS ON VINYL SIDING OR EIFS CONSULT THIS ENGINEER.

(B) TO EXISTING CONCRETE BLOCK WALL:
– 1/4"ø TAPCON ANCHORS, AS MANUFACTURED BY I.T.W. RAMSET/ RED HEAD.
– 1/4"ø x 3/4" ALL POINTS SOLID-SET ANCHORS AS DISTRIBUTED BY ALL POINTS SCREW, BOLT & SPECIALTY COMPANY.
– 1/4"ø WEDGE-BOLT W/ 1/4"ø BLOCK-PLUG ANCHORS AS MANUFACTURED BY POWERS FASTENING, INC.

NOTES:
B.1) MINIMUM EMBEDMENT INTO CONCRETE BLOCK OF TAPCON & WEDGE-BOLT ANCHORS, IS 1 1/4".

B.2) MINIMUM EMBEDMENT OF 1/4"ø x 3/4" ALL POINTS SOLID-SET ANCHORS SHALL BE ENTIRELY EMBEDDED INTO THE CONCRETE BLOCK. NO EMBEDMENT INTO STUCCO SHALL BE PERMITTED. 1/4" ø-20 S.S. MACHINE SCREW USED SHALL BE 1 1/2" LONG MINIMUM SHOULD STUCCO EXIST, AND 1" MINIMUM FOR WALLS WITH NO STUCCO.

B.3) IN CASE THAT PRECAST STONE, PRECAST CONCRETE PANELS, PAVERS OR ANY VENEER BE FOUND ON THE EXISTING WALL OR FLOOR, ANCHORS SHALL BE LONG ENOUGH TO REACH THE MAIN STRUCTURE BEHIND SAID WALL FINISHES. ANCHORAGE SHALL BE AS INDICATED ON NOTES B.1) & B.2) ABOVE. FOR INSTALLATIONS ON VINYL SIDING OR EIFS CONSULT THIS ENGINEER.

(C) ANCHORS SHALL BE INSTALLED FOLLOWING ALL OF THE RECOMMENDATIONS AND SPECIFICATIONS OF THE ANCHOR'S MANUFACTURER.

(D) SEE SCHEDULE BELOW FOR EDGE DISTANCE (E.D.) VERSUS SPACING RELATIONSHIP FOR ANCHORS.

EDGE DISTANCE VERSUS SPACING FOR ANCHORS

MAXIMUM ANCHOR SPACINGS ARE VALID FOR 3 1/2" EDGE DISTANCE FOR 1/4"ø TAPCON AND SOLID SET AND WEDGE-BOLT FOR E. D. LESS THAN THE ABOVE MENTIONED, REDUCE ANCHOR SPACING BY MULTIPLYING SPACING SHOWN ON SCHEDULE BY THE FOLLOWING FACTORS. (NOTE : Min. E. D. FOR ALL POINT SOLID SET ANCHORS IS 3"). REDUCED SPACING OBTAINED USING FACTOR SHALL NOT BE LESS THAN MINIMUM SPACING INDICATED FOR EACH ANCHOR TYPE.

ACTUAL E. D.	FACTOR		
	WEDGE-BOLT	1/4"ø TAPCON	SOLID SET
	MIN. SPACING = 3"	MIN. SPACING = 3"	MIN. SPACING = 3.5"
3"	0.83	0.83	0.78
2 1/2"	0.66	0.66	–
2"	0.50	0.50	–

① HV BLADE

F.B.C.(**H**igh **V**elocity **H**urricane **Z**one)

Approved as complying with the Florida Building Code
Date 02/28/2008
NOA# 07-0817.09
Miami Dade Product Control Division
By

MIAMI-DADE COUNTY

JUL 20 2007

P.E. SEAL/SIGNATURE/DATE

TILTECO INC.
TILLIT TESTING & ENGINEERING COMPANY
6355 N.W. 36th. St., Ste. 305, VIRGINIA GARDENS, FLORIDA 33166
Phone : (305)871-1530 . Fax : (305)871-1531
e-mail: tilteco@aol.com
EB-0006719
WALTER A. TILLIT Jr. P. E.
FLORIDA Lic. # 44167

EASTERN METAL SUPPLY, INC.
(ASSA # 1)
3600 23rd AVENUE SOUTH
LAKEWORTH, FL 33461
PH (561) 533-6061 FAX (561) 588-4780

© 2003 EASTERN METAL SUPPLY, INC.

BERTHA HV ™
Accordion Shutter System

REV. No	DESCRIPTION	DATE
1		
2		
3		
4		
5		
6		

Drawn by: F.P.
DATE: 07/19/07
DRAWING No 07-195
SHEET 14 OF 26

ANCHORS SPACING LEGEND

TAPCON
ALL POINTS SOLID-SET
WEDGE-BOLT

MAXIMUM DESIGN PRESSURE RATING (p.s.f.) AND CORRESPONDING MAXIMUM ANCHOR* SPACING (in.) SCHEDULE FOR A GIVEN MAX. SHUTTER SPAN, DESIGN NEGATIVE LOAD AND A CORRESPONDING MOUNTING TYPE FOR CONCRETE & CONCRETE BLOCK INSTALLATIONS

(SEE MOUNTINGS I, J, K & L ON SHEET 7).

MAXIMUM SPAN (ft)	POURED CONCRETE																POURED CONCRETE/CONCRETE BLOCK															
	(I) WALK OVER MOUNTING								(J) RAINGUARD MOUNTING								(K) WALL/FLOOR MOUNTING								(L) WALL/WALK OVER MOUNTING							
	NEGATIVE DESIGN LOAD (psf)								NEGATIVE DESIGN LOAD (psf)								NEGATIVE DESIGN LOAD (psf)								NEGATIVE DESIGN LOAD (psf)							
	30	40	60	75	90	120	160	205	30	40	60	75	90	120	160	205	30	40	60	75	90	120	160	205	30	40	60	75	90	120	160	205
3'-0" OR LESS	14	12	10	9	8	8	6	6	12	12	12	12	12	11	8	6	7	7	7	7	7	7	7	6	5	5	5	5	5	5	5	5
	14	12	10	9	8	8	6	6	12	12	12	12	12	12	9.5	7	7	7	7	7	7	7	7	7	5	5	5	5	5	5	5	5
	14	12	10	9	8	8	6	6	12	12	12	12	12	12	12	10.5	7	7	7	7	7	7	7	7	5	5	5	5	5	5	5	5
4'-0"	14	12	10	9	8	8	6	6	12	12	12	12	11	8	6	4.5	7	7	7	7	7	7	5.5	4.5	5	5	5	5	5	5	5	4.5
	14	12	10	9	8	8	6	6	12	12	12	12	12	9.5	7	5.5	7	7	7	7	7	7	7	7	5	5	5	5	5	5	5	5
	14	12	10	9	8	8	6	6	12	12	12	12	12	12	10	8	7	7	7	7	7	7	7	7	5	5	5	5	5	5	5	5
5'-0"	14	12	10	9	8	8	6	6	12	12	12	10.5	8.5	6.5	5	3.5	7	7	7	7	7	6	5.5	4.5	5	5	5	5	5	5	5	3.5
	14	12	10	9	8	8	6	6	12	12	12	12	10	7.5	5.5	4	7	7	7	7	7	7	7	7	5	5	5	5	5	5	5	5
	14	12	10	9	8	8	6	6	12	12	12	12	12	11	8	6.5	7	7	7	7	7	7	7	6.5	5	5	5	5	5	5	5	5
6'-0"	14	12	10	9	8	8	6	6	12	12	11	8.5	7	5.5	4	3	7	7	7	7	6.5	5	3.5	3	5	5	5	5	5	5	4.5	3
	14	12	10	9	8	8	6	6	12	12	12	10	8	6	4.5	3.5	7	7	7	7	7	7	7	7	5	5	5	5	5	5	5	5
	14	12	10	9	8	8	6	6	12	12	12	12	12	9	6.5	5	7	7	7	7	7	7	7	5.5	5	5	5	5	5	5	5	5
7'-0"	14	12	10	9	8	8	6	6	12	12	9.5	7.5	6.5	4.5	3	–	7	7	7	7	5.5	4	3	–	5	5	5	5	5	4	3	–
	14	12	10	9	8	8	6	6	12	12	12	8.5	7	5	4	3	7	7	7	7	7	7	7	6	5	5	5	5	5	5	5	5
	14	12	10	9	8	8	6	6	12	12	12	12	10.5	7.5	5.5	4.5	7	7	7	7	7	7	6	4	5	5	5	5	5	5	5	4.5
8'-0"	14	12	10	9	8	8	6	–	12	12	8	6.5	5.5	4	3	–	7	7	7	6	5	3.5	–	–	5	5	5	5	5	3.5	3	–
	14	12	10	9	8	8	6	–	12	12	10.5	7.5	6	4.5	3.5	–	7	7	7	7	7	7	7	4	5	5	5	5	5	5	5	5
	14	12	10	9	8	8	6	–	12	12	12	9.5	8	6	5	4	7	7	7	7	7	7	5	3	5	5	5	5	5	5	5	4
9'-0"	14	12	10	9	8	8	–	–	12	11	7	6	5	3.5	–	–	7	7	6.5	5	4.5	3	–	–	5	5	5	5	4.5	3	–	–
	14	12	10	9	8	8	–	–	12	12	9.5	6.5	5.5	4	3	–	7	7	7	7	7	7	6	3	5	5	5	5	5	5	5	5
	14	12	10	9	8	8	–	–	12	12	12	9.5	8	6	4.5	3.5	7	7	7	7	7	6	4	–	5	5	5	5	5	5	4	3.5
10'-0"	14	12	10	9	8	8	–	–	12	10	6.5	5	4	3	–	–	7	7	6	4.5	4	3	–	–	5	5	5	4.5	4	3	–	–
	14	12	10	9	8	8	–	–	12	11	8.5	6	5	3.5	–	–	7	7	7	7	7	7	4.5	–	5	5	5	5	5	5	5	4.5
	14	12	10	9	8	8	–	–	12	12	11	8.5	7	5.5	4	3	7	7	7	7	7	5.5	3	–	5	5	5	5	5	5	4	3
11'-0"	14	12	10	9	8	8	–	–	12	9	6	4.5	4	3	–	–	7	7	5.5	4.5	3.5	–	–	–	5	5	5	4.5	3.5	–	–	–
	14	12	10	9	8	8	–	–	12	10	7	5.5	4.5	3.5	–	–	7	7	7	7	7	7	3.5	–	5	5	5	5	5	5	5	4
	14	12	10	9	8	8	–	–	12	12	10	8	6.5	5	3.5	3	7	7	7	7	6.5	5	–	–	5	5	5	5	5	5	3.5	3
12'-0"	14	12	10	9	8	–	–	–	11	8	5.5	4	3.5	–	–	–	7	7	5	4	3	–	–	–	5	5	5	4	3	–	–	–
	14	12	10	9	8	–	–	–	12	9.5	6.5	5	4	3	–	–	7	7	7	7	7	6	3	–	5	5	5	5	5	5	4.5	3.5
	14	12	10	9	8	–	–	–	12	12	9	7	6	4.5	3.5	–	7	7	7	7	6	4	–	–	5	5	5	5	5	4.5	3.5	–
13'-0"	14	12	10	9	8	–	–	–	10	7.5	5	4	3	–	–	–	7	7	4.5	3.5	3	–	–	–	5	5	4.5	3.5	3	–	–	–
	14	12	10	9	8	–	–	–	11.5	8.5	6	4.5	3.5	3	–	–	7	7	7	7	7	4.5	–	–	5	5	5	5	5	5	4.5	3.5
	14	12	10	9	8	–	–	–	12	12	8.5	6.5	5.5	4	3	–	7	7	7	7	5.5	3.5	–	–	5	5	5	5	5	4	3	–
14'-0"	14	12	10	9	–	–	–	–	9.5	7	4.5	3.5	3	–	–	–	7	6.5	4	3.5	–	–	–	–	5	5	4	3.5	–	–	–	–
	14	12	10	9	–	–	–	–	10.5	8	5.5	4	3.5	–	–	–	7	7	7	7	7	4	–	–	5	5	5	5	5	5	4	3
	14	12	10	9	–	–	–	–	12	11.5	7.5	6	5	4	3	–	7	7	7	6.5	5.5	–	–	–	5	5	5	5	5	4	3	–
15'-0"	14	12	10	–	–	–	–	–	8.5	6.5	4	3.5	3	–	–	–	7	6	4	3	–	–	–	–	5	5	4	3	–	–	–	–
	14	12	10	–	–	–	–	–	10	7.5	5	4	3	–	–	–	7	7	7	7	7	3.5	–	–	5	5	5	5	5	5	4	3
	14	12	10	–	–	–	–	–	12	11	7	5.5	4.5	3.5	–	–	7	7	7	6	5	–	–	–	5	5	5	5	5	3.5	–	–
16'-0"	14	12	10	–	–	–	–	–	8	6	4	3	–	–	–	–	7	5.5	3.5	3	–	–	–	–	5	5	3.5	3	–	–	–	–
	14	12	10	–	–	–	–	–	9.5	7	4.5	3.5	3	–	–	–	7	7	7	7	6	3	–	–	5	5	5	5	5	4.5	3.5	–
	14	12	10	–	–	–	–	–	12	10	6.5	5.5	4.5	3.5	–	–	7	7	7	5.5	4	–	–	–	5	5	5	5	4.5	3.5	–	–

① HV BLADE

F.B.C.(**H**igh **V**elocity **H**urricane **Z**one)

Approved as complying with the Florida Building Code
Date 02/28/2008
NOA# 07-0817.09
Miami-Dade Product Control Division
By

MIAMI-DADE COUNTY

JUL 20 2007

P.E. SEAL/SIGNATURE/DATE

TILTECO INC.

TILLIT TESTING & ENGINEERING COMPANY
6355 N.W. 36th. St., Ste. 305, VIRGINIA GARDENS, FLORIDA 33166
Phone : (305)871-1530 . Fax : (305)871-1531
e-mail: tilteco@aol.com
EB-0006719
WALTER A. TILLIT Jr. P. E.
FLORIDA Lic. # 44167

EASTERN METAL SUPPLY, INC.
(ASSA # 1)
3600 23rd AVENUE SOUTH
LAKEWORTH, FL 33461
PH (561) 533-6061 FAX (561) 588-4780

© 2003 EASTERN METAL SUPPLY, INC.

BERTHA HV ™
Accordion Shutter System

REV. No	DESCRIPTION	DATE
1		
2		
3		
4		
5		
6		

Drawn by: F.P.
DATE: 07/19/07
DRAWING No **07-195**
SHEET **15 OF 26**

MAXIMUM DESIGN PRESSURE RATING (p.s.f.) AND CORRESPONDING MAXIMUM ANCHOR+ SPACING (in.) SCHEDULE FOR A GIVEN MAX. SHUTTER SPAN, NEGATIVE DESIGN LOAD AND A CORRESPONDING MOUNTING TYPE.

(SEE MOUNTINGS ON SHEETS 18 & 19).

MAXIMUM SPAN (ft)	SUBSTRATE																																									
	SOUTHERN PINE No. 2 W/ MIN. G=0.55, DOUGLAS FIR W/ MIN. G=0.50												SPRUCE PINE FIR NORTH W/ MIN. G=0.43												SPRUCE PINE FIR SOUTH W/ MIN. G=0.36												1/2" MIN. CDX PLYWOOD					
	WALL MOUNTINGS M, N, O & R						CEILING MOUNT T FLOOR MOUNTINGS W & X						WALL MOUNTINGS M, N, O & R						CEILING MOUNT T FLOOR MOUNTINGS W & X						WALL MOUNTINGS M, N, O & R						CEILING MOUNT T FLOOR MOUNTINGS W & X						WALL MOUNTINGS P & Q					
	NEGATIVE DESIGN LOAD (psf)						NEGATIVE DESIGN LOAD (psf)						NEGATIVE DESIGN LOAD (psf)						NEGATIVE DESIGN LOAD (psf)						NEGATIVE DESIGN LOAD (psf)						NEGATIVE DESIGN LOAD (psf)						NEGATIVE DESIGN LOAD (psf)					
	30	40	60	75	90	105	30	40	60	75	90	105	30	40	60	75	90	105	30	40	60	75	90	105	30	40	60	75	90	105	30	40	60	75	90	105	30	40	60	75	90	105
3'-0" OR LESS	12	10	10	9	8	8	6	6	6	6	6	6	12	10	10	9	8	8	6	6	6	6	6	6	12	10	10	9	8	8	6	6	6	6	6	6	6	5	4	4	4	3
4'-0"	12	10	10	9	8	8	6	6	6	6	6	6	12	10	10	9	8	8	6	6	6	6	6	6	12	10	10	9	8	8	6	6	6	6	6	6	6	5	4	4	4	3
5'-0"	12	10	10	9	8	8	6	6	6	6	6	5.5	12	10	10	9	8	8	6	6	6	6	6	5	12	10	10	9	8	7	6	6	6	6	6	5	6	5	4	4	4	3
6'-0"	12	10	10	9	8	6.5	6	6	6	6	5.5	4.5	12	10	10	9	8	5	6	6	6	5.5	5	4.5	12	10	10	9	6	3.5	6	6	6	6	5	4.5	6	5	4	4	3.5	–
7'-0"	12	10	10	9	6.5	4	6	6	6	5.5	4.5	4	12	10	10	9	5	3	6	6	6	5	4	3.5	12	10	10	7	3.5	–	6	6	6	5	4	3.5	6	5	4	4	–	–
8'-0"	12	10	10	7.5	4.5	3	6	6	6	5	4	3.5	12	10	10	6	3.5	–	6	6	5	4.5	3.5	3	12	10	10	4	–	–	6	6	5	4.5	3.5	3	6	5	4	–	–	–
9'-0"	12	10	10	5	3.5	–	6	6	5.5	4.5	3.5	3	12	10	9	4	–	–	6	6	4.5	4	3	3	12	10	4	3	–	–	6	6	4.5	4	3	3	6	5	3.5	–	–	–
10'-0"	12	10	7.5	4	–	–	6	6	5	4	3	–	12	10	6	3	–	–	6	6	4	3.5	3	–	12	10	3	–	–	–	6	6	4	3.5	3	–	6	5	–	–	–	–
11'-0"	12	10	5.5	–	–	–	6	6	4.5	–	–	–	12	10	4.5	–	–	–	6	5.5	3.5	–	–	–	12	10	–	–	–	–	6	5.5	4	–	–	–	6	5	–	–	–	–
12'-0"	12	10	4.5	–	–	–	6	6	4	–	–	–	12	10	3.5	–	–	–	6	5	3.5	–	–	–	12	10	–	–	–	–	6	5	3.5	–	–	–	6	5	–	–	–	–
13'-0"	12	10	–	–	–	–	6	6	–	–	–	–	12	10	–	–	–	–	6	4.5	–	–	–	–	12	7.5	–	–	–	–	6	4.5	–	–	–	–	6	4.5	–	–	–	–
14'-0"	12	10	–	–	–	–	6	5.5	–	–	–	–	12	7	–	–	–	–	5.5	4.5	–	–	–	–	12	7	–	–	–	–	5.5	4.5	–	–	–	–	6	3	–	–	–	–
15'-0"	12	–	–	–	–	–	6	–	–	–	–	–	12	–	–	–	–	–	5	–	–	–	–	–	12	–	–	–	–	–	5	–	–	–	–	–	6	–	–	–	–	–
16'-0"	12	–	–	–	–	–	6	–	–	–	–	–	12	–	–	–	–	–	5	–	–	–	–	–	11.5	–	–	–	–	–	5	–	–	–	–	–	6	–	–	–	–	–

+ NOTES ON ANCHORS REQUIREMENTS: WOOD SUBSTRATES.

1. ANCHORS TO WALL, FLOOR OR SOLID WOOD SOFFIT SHALL BE AS FOLLOWS:

– 1/4"ø TAPCON ANCHORS, AS MANUFACTURED BY I.T.W. BUILDEX W/ MINIMUM EMBEDMENT AS INDICATED AT EACH SECTION ON SHEETS 18 & 19.
EXCEPTION: SEE NOTE 2 BELOW.

2. ANCHORS TO HOLLOW CEILING SHALL BE AS PER MOUNTING TYPE U, SHEET 19 AND SHALL CONSIST OF LAG SCREWS AS PER NDS 2001 SPECIFICATIONS.

3. SUBSTRATE SHALL CONSIST OF THE FOLLOWING:
–SOUTHERN PINE No. 2 W/ G=0.55 (N.D.S)
–DOUGLAS FIR W/ G=0.50 (N.D.S.)
–SPRUCE PINE FIR NORTH W/ G=0.43 (N.D.S.)
–SPRUCE PINE FIR SOUTH W/ G=0.36 (N.D.S.)
–MIN. 1/2" CDX PLYWOOD (1986 APA)

4. ANCHORS SHALL BE INSTALLED FOLLOWING ALL OF THE RECOMMENDATIONS AND SPECIFICATIONS OF THE ANCHOR'S MANUFACTURER.

① HV BLADE

F.B.C.(**H**igh **V**elocity **H**urricane **Z**one)

Approved as complying with the Florida Building Code
Date 02/28/2008
NOA# 07-0817.09
Miami Dade Product Control Division
By Helen A. Hebler

MIAMI-DADE COUNTY

JUL 20 2007

P.E. SEAL/SIGNATURE/DATE

TILTECO INC.
TILLIT TESTING & ENGINEERING COMPANY
6355 N.W. 36th. St., Ste. 305, VIRGINIA GARDENS, FLORIDA 33166
Phone : (305)871-1530 . Fax : (305)871-1531
e-mail: tilteco@aol.com
EB-0006719
WALTER A. TILLIT Jr. P. E.
FLORIDA Lic. # 44167

EASTERN METAL SUPPLY, INC.
(ASSA # 1)
3600 23rd AVENUE SOUTH
LAKEWORTH, FL 33461
PH (561) 533-6061 FAX (561) 588-4780

© 2003 EASTERN METAL SUPPLY, INC.

BERTHA HV ™
Accordion Shutter System

REV. No	DESCRIPTION	DATE
1		
2		
3		
4		
5		
6		

Drawn by: F.P.
DATE: 07/19/07
DRAWING No 07-195
SHEET 16 OF 26

MAXIMUM DESIGN PRESSURE RATING (p.s.f.) AND CORRESPONDING MAXIMUM ANCHOR+ SPACING (in.) SCHEDULE FOR A GIVEN MAX. SHUTTER SPAN, NEGATIVE DESIGN LOAD AND A CORRESPONDING MOUNTING TYPE.

(SEE MOUNTINGS ON SHEET 19).

MAXIMUM SPAN (ft)	SUBSTRATE																	
	SOUTHERN PINE No. 2 W/ MIN. G=0.55, DOUGLAS FIR W/ MIN. G=0.50						SPRUCE PINE FIR NORTH W/ MIN. G=0.43						SPRUCE PINE FIR SOUTH W/ MIN. G=0.36					
	B.O. WALL MOUNTINGS S & V						B.O. WALL MOUNTINGS S & V						B.O. WALL MOUNTINGS S & V					
	NEGATIVE DESIGN LOAD (psf)						NEGATIVE DESIGN LOAD (psf)						NEGATIVE DESIGN LOAD (psf)					
	30	40	60	75	90	105	30	40	60	75	90	105	30	40	60	75	90	105
3'-0" OR LESS	12	12	12	12	12	12	12	12	12	12	12	12	12	12	12	12	12	12
4'-0"	12	12	12	12	12	12	12	12	12	12	12	12	12	12	12	12	12	12
5'-0"	12	12	12	12	12	12	12	12	12	12	12	12	12	12	12	12	12	10.5
6'-0"	12	12	12	12	12	12	12	12	12	12	12	12	12	12	12	12	10	8.5
7'-0"	12	12	12	12	12	12	12	12	12	12	12	10.5	12	12	12	10.5	8.5	7.5
8'-0"	12	12	12	12	12	12	12	12	12	12	11	9.5	12	12	11.5	9	7.5	6.5
9'-0"	12	12	12	12	12	10.5	12	12	12	11.5	9.5	8.5	12	12	10	8	6.5	5.5
10'-0"	12	12	12	12	11.5	9.5	12	12	12	10.5	8.5	7.5	12	12	9	7	6	5
11'-0"	12	12	12	12	10	8.5	12	12	12	9.5	8	7	12	12	8	6.5	5.5	4.5
12'-0"	12	12	12	11.5	9.5	8	12	12	11	8.5	7	6	12	11.5	7.5	6	5	4
13'-0"	12	12	12	10.5	8.5	7.5	12	12	10	8	6.5	5.5	12	10.5	7	5.5	4.5	4
14'-0"	12	12	12	9.5	8	6	12	12	9.5	7.5	6	4.5	12	9.5	6.5	5	4	3
15'-0"	12	12	11	9	7.5	5	12	12	8.5	7	6	4	12	9	6	5	4	–
16'-0"	12	12	10.5	8.5	6.5	4	12	12	8	6.5	5	3	11.5	8.5	5.5	4.5	3.5	–

① HV BLADE

+ NOTES ON ANCHORS REQUIREMENTS: WOOD SUBSTRATES.

1. ANCHORS TO WALL, FLOOR OR SOLID WOOD SOFFIT SHALL BE AS FOLLOWS:

– 1/4"ø TAPCON ANCHORS, AS MANUFACTURED BY I.T.W. BUILDEX W/ MINIMUM EMBEDMENT AS INDICATED AT EACH SECTION ON SHEETS 18 & 19.
EXCEPTION: SEE NOTE 2 BELOW.

2. ANCHORS TO HOLLOW CEILING SHALL BE AS PER MOUNTING TYPE U, SHEET 19 AND SHALL CONSIST OF LAG SCREWS AS PER NDS 2001 SPECIFICATIONS.

3. SUBSTRATE SHALL CONSIST OF THE FOLLOWING:
–SOUTHERN PINE No. 2 W/ G=0.55 (N.D.S)
–DOUGLAS FIR W/ G=0.50 (N.D.S.)
–SPRUCE PINE FIR NORTH W/ G=0.43 (N.D.S.)
–SPRUCE PINE FIR SOUTH W/ G=0.36 (N.D.S.)
–MIN. 1/2" CDX PLYWOOD (1986 APA)

4. ANCHORS SHALL BE INSTALLED FOLLOWING ALL OF THE RECOMMENDATIONS AND SPECIFICATIONS OF THE ANCHOR'S MANUFACTURER.

F.B.C.(**H**igh **V**elocity **H**urricane **Z**one)

Approved as complying with the Florida Building Code
Date 02/28/2008
NOA# 07-0817.09
Miami Dade Product Control Division
By

MIAMI–DADE COUNTY

JUL 20 2007

P.E. SEAL/SIGNATURE/DATE

TILTECO INC.
TILLIT TESTING & ENGINEERING COMPANY
8355 N.W. 36th. St., Ste. 305, VIRGINIA GARDENS, FLORIDA 33166
Phone : (305)871–1530 . Fax : (305)871–1531
e–mail: tilteco@aol.com
EB–0006719
WALTER A. TILLIT Jr. P. E.
FLORIDA Lic. # 44167

EASTERN METAL SUPPLY, INC.
(ASSA # 1)
3600 23rd AVENUE SOUTH
LAKEWORTH, FL 33461
PH (561) 533–6061 FAX (561) 588–4780

© 2003 EASTERN METAL SUPPLY, INC.

BERTHA HV ™
Accordion Shutter System

REV. No	DESCRIPTION	DATE
1		
2		
3		
4		
5		
6		

Drawn by: F.P.
DATE: 07/19/07
DRAWING No 07–195
SHEET 17 OF 26

INSTALLATION DETAILS ON EXISTING WOOD BUILDINGS FOR ① HV BLADE

MAX. SHUTTER SPAN L+ OR L− FOR INSTALLATIONS INTO WOOD SHALL BE LIMITED TO 105.0 psf. DESIGN LOAD

NOTE:
1−SEE SHEET 4 FOR TYPICAL SHUTTER ASSEMBLY
2−MOUNTING SECTIONS CAN BE COMBINED IN ANY WAY TO SUIT ANY INSTALLATION.

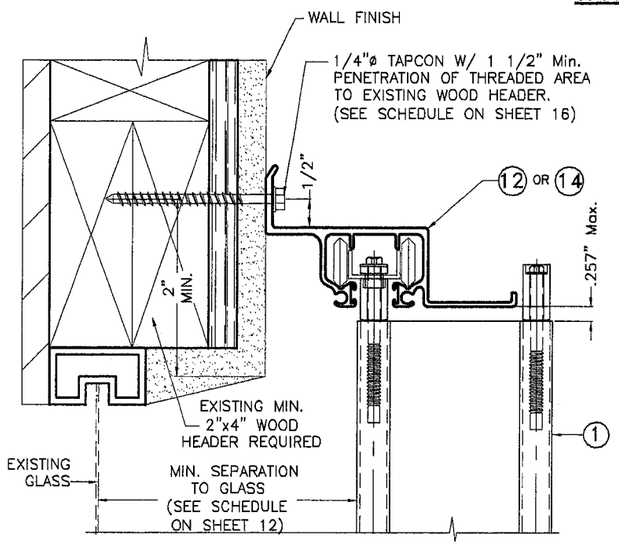

Ⓜ HV WALL HEADER INSTALLATION

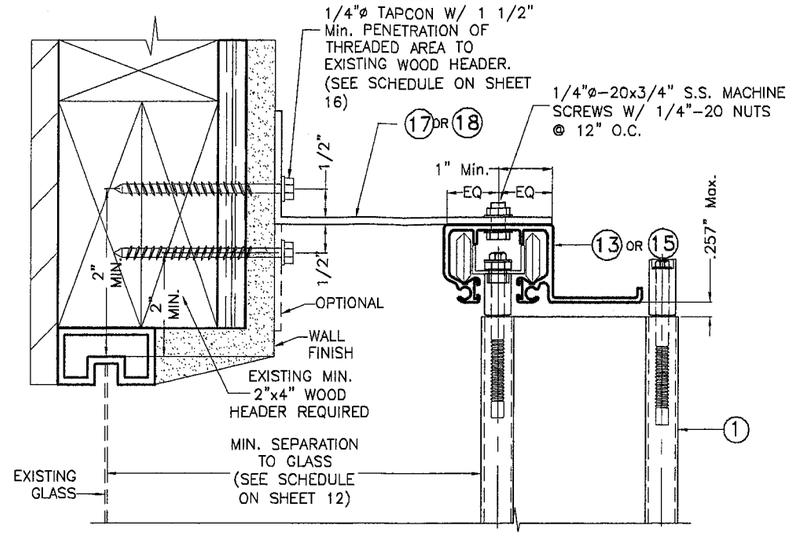

Ⓝ HV WALL HEADER INSTALLATION

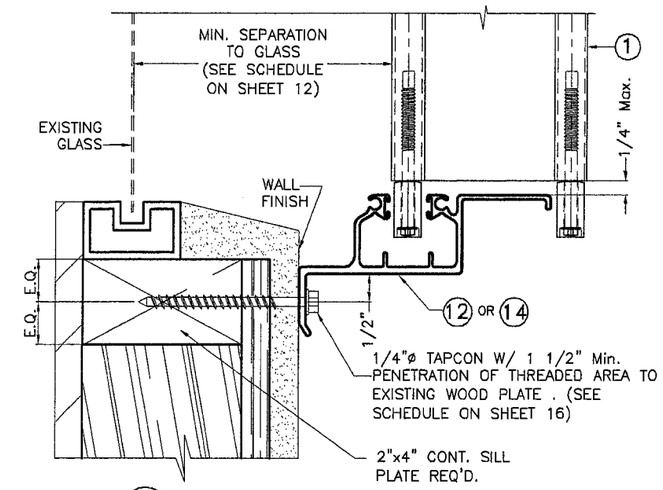

Ⓞ HV WALL SILL INSTALLATION

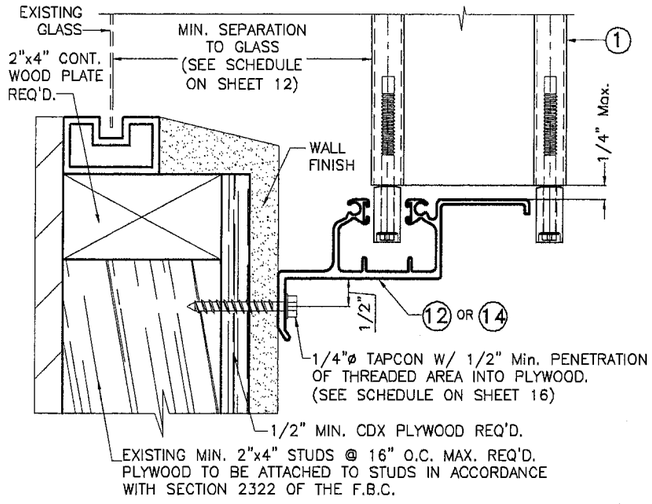

Ⓟ HV WALL SILL INSTALLATION

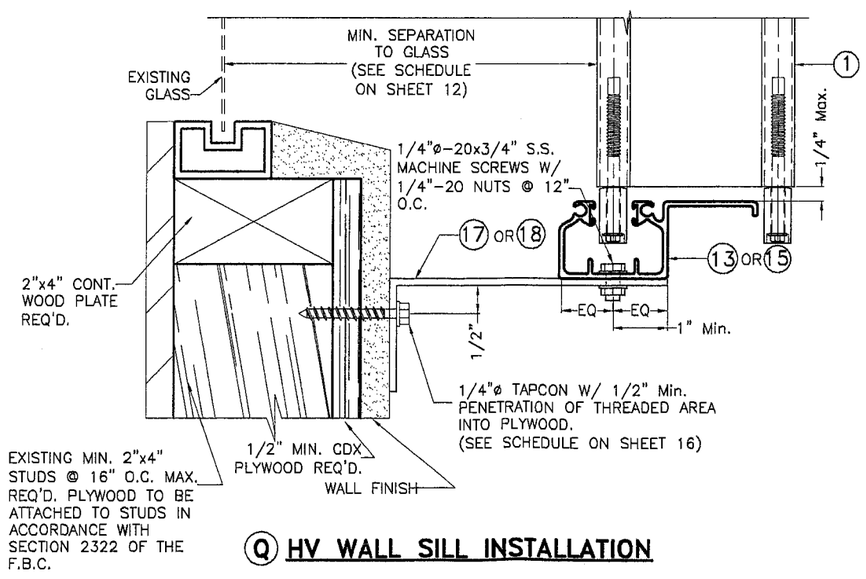

Ⓠ HV WALL SILL INSTALLATION

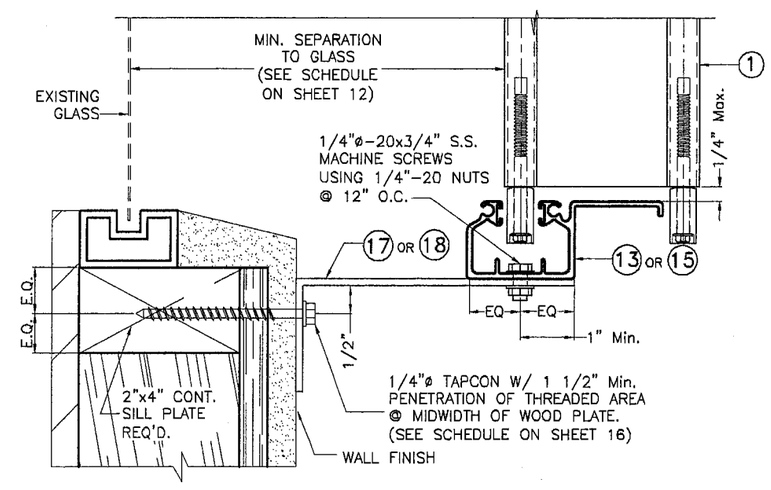

Ⓡ HV WALL SILL INSTALLATION

F.B.C.(**H**igh **V**elocity **H**urricane **Z**one)

Approved as complying with the Florida Building Code
Date: 02/28/2008
NOA: 07-0817.09
Miami-Dade Product Control Division
By: Helena A. Molina

MIAMI−DADE COUNTY

JUL 20 2007

P.E. SEAL/SIGNATURE/DATE

TILTECO INC.
TILLIT TESTING & ENGINEERING COMPANY
6355 N.W. 36th. St., Ste. 305, VIRGINIA GARDENS, FLORIDA 33166
Phone : (305)871−1530 . Fax : (305)871−1531
e−mail: tilteco@aol.com
EB−0006719
WALTER A. TILLIT Jr. P. E.
FLORIDA Lic. # 44167

EASTERN METAL SUPPLY, INC.
(ASSA # 1)
3600 23rd AVENUE SOUTH
LAKEWORTH, FL 33461
PH (561) 533−6061 FAX (561) 588−4780

© 2003 EASTERN METAL SUPPLY, INC.

BERTHA HV™
Accordion Shutter System

REV. No	DESCRIPTION	DATE
1		
2		
3		
4		
5		
6		

Drawn by: F.P.
DATE: 07/19/07
DRAWING No 07−195
SHEET 18 OF 26

INSTALLATION DETAILS ON EXISTING WOOD BLDGS. FOR (1) HV BLADE MAX. SHUTTER SPAN L+ OR L− FOR INSTALLATIONS INTO WOOD SHALL BE LIMITED TO 105.0 psf. DESIGN LOAD

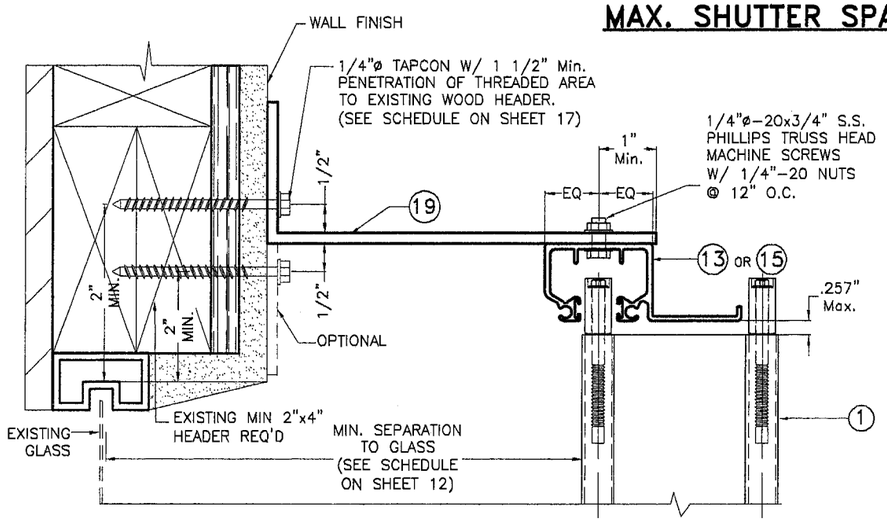

(S) HV WALL HEADER INSTALLATION

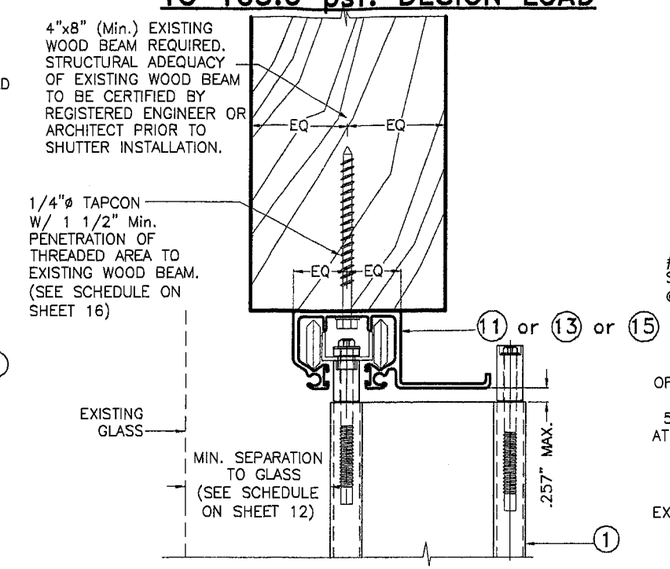

(T) HV CEILING INSTALLATION

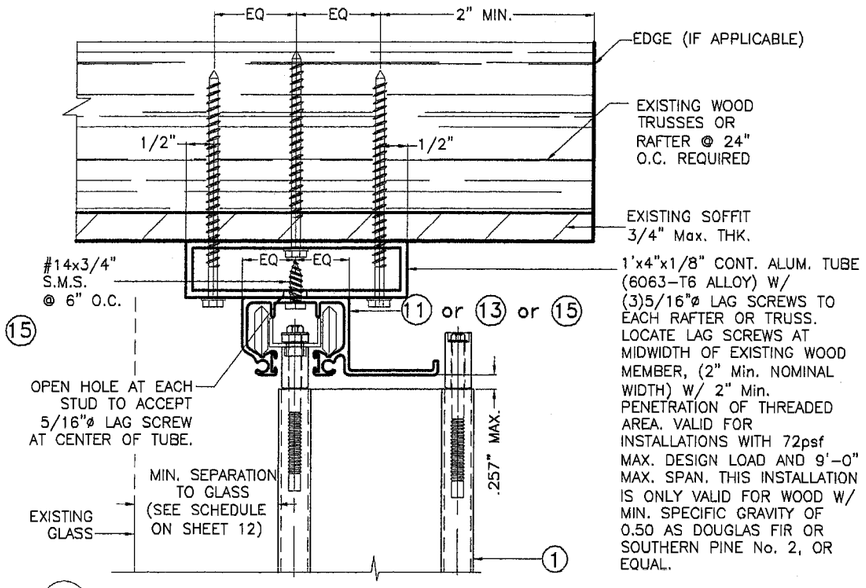

(U) HV CEILING INSTALLATION

NOTES:
1-SEE SHEET 4 FOR TYPICAL SHUTTER ASSEMBLY
2-MOUNTING SECTIONS CAN BE COMBINED IN ANY WAY TO SUIT ANY INSTALLATION.

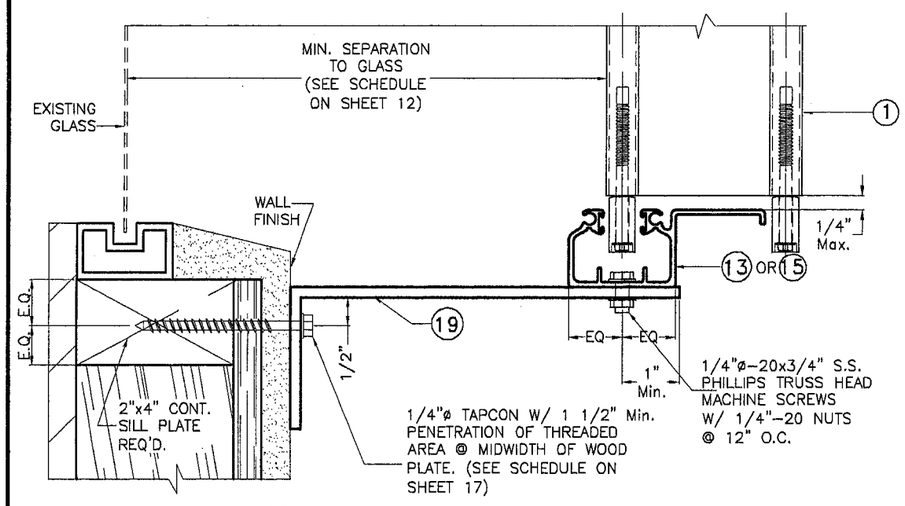

(V) HV WALL SILL INSTALLATION

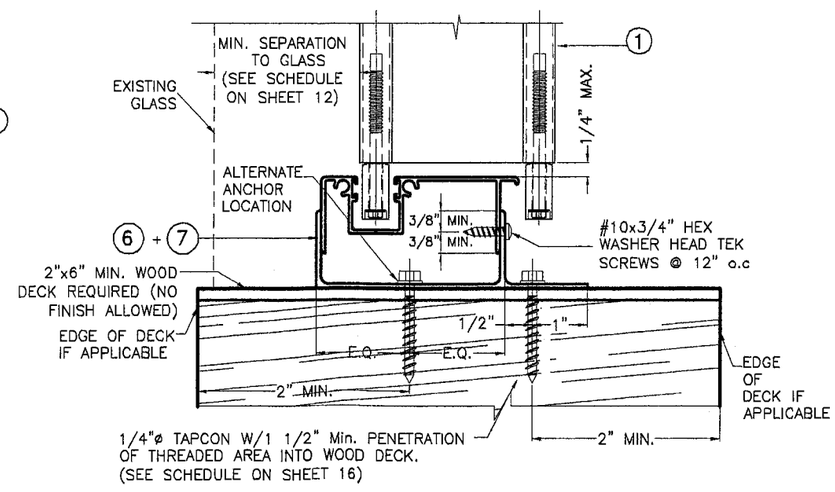

(W) HV FLOOR INSTALLATION

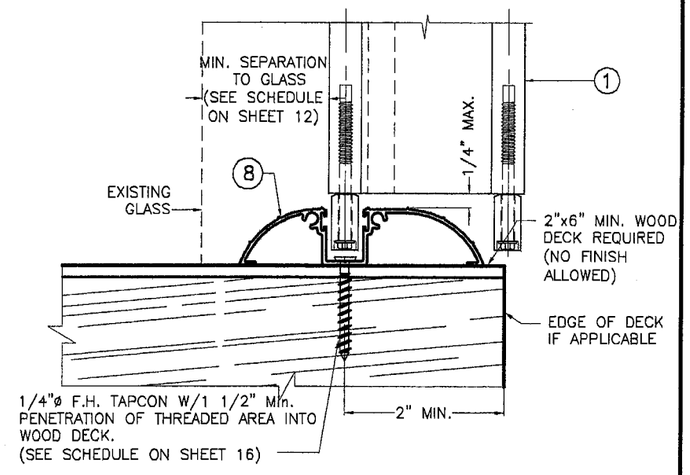

(X) HV WALK-OVER INSTALLATION

F.B.C.(**H**igh **V**elocity **H**urricane **Z**one)

Approved as complying with the Florida Building Code
Date: 02/28/2008
No.: 07-0817.04
Miami-Dade Product Control
Division
By: Helena A. Alba

MIAMI-DADE COUNTY

JUL 20 2007

P.E. SEAL/SIGNATURE/DATE

TILTECO INC.
TILLIT TESTING & ENGINEERING COMPANY
6355 N.W. 36th. St., Ste. 305, VIRGINIA GARDENS, FLORIDA 33166
Phone : (305)871-1530 . Fax : (305)871-1531
e-mail: tilteco@aol.com
EB-0006719
WALTER A. TILLIT Jr. P. E.
FLORIDA Lic. # 44167

EASTERN METAL SUPPLY, INC.
(ASSA # 1)
3600 23rd AVENUE SOUTH
LAKEWORTH, FL 33461
PH (561) 533-6061 FAX (561) 588-4780

© 2003 EASTERN METAL SUPPLY, INC.

BERTHA HV™
Accordion Shutter System

REV. No	DESCRIPTION	DATE
1		
2		
3		
4		
5		
6		

Drawn by: F.P.
DATE: 07/19/07
DRAWING No 07-195
SHEET 19 OF 26

END INSTALLATIONS ① HV BLADE INTO 2"x4" MIN. WOOD STUDS.

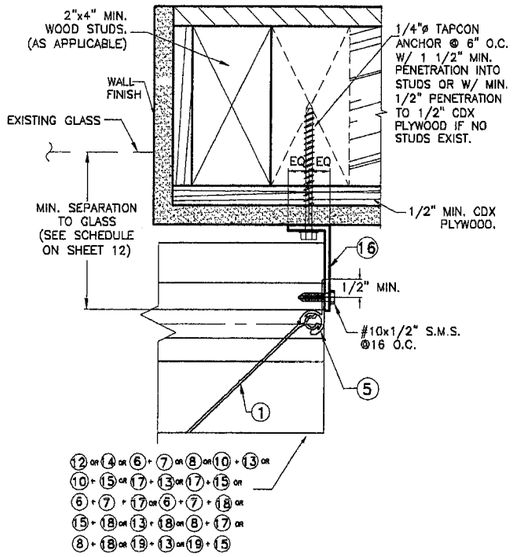

END CONNECTION DETAIL ⑦

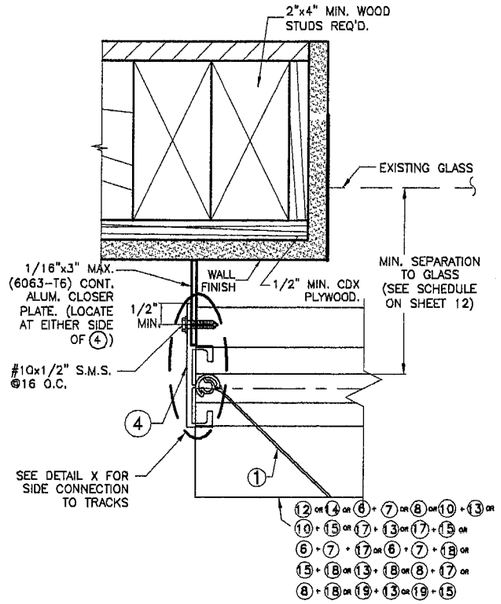

END CONNECTION DETAIL ⑧

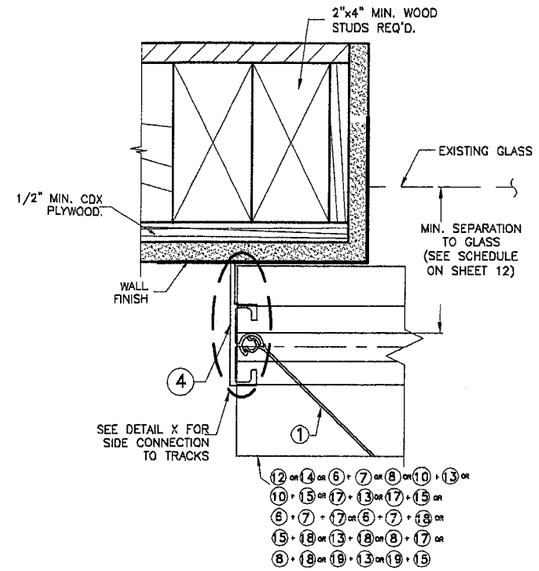

END CONNECTION DETAIL ⑨

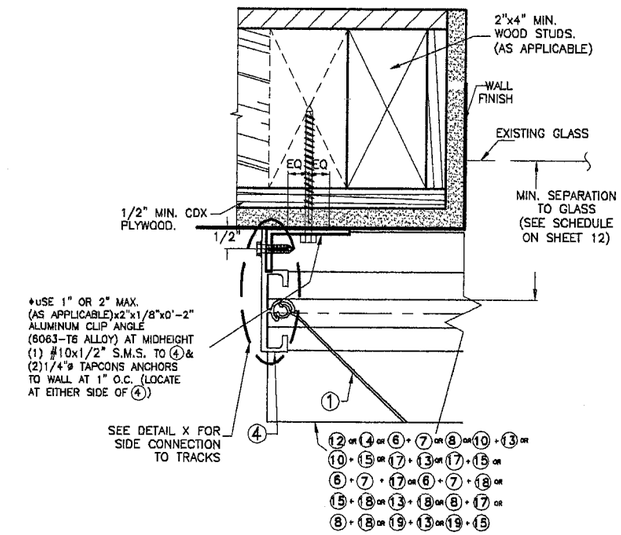

END CONNECTION DETAIL ⑩

♦ REQUIRED ONLY FOR SPANS GREATER THAN 12'-0"

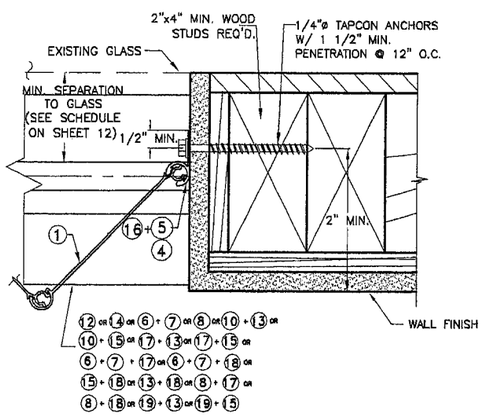

END CONNECTION DETAIL ⑪

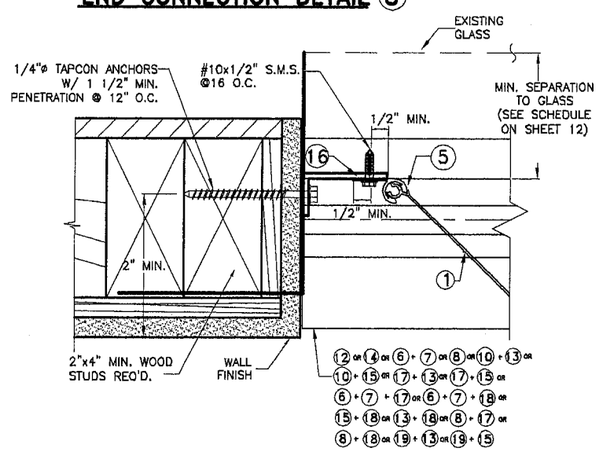

END CONNECTION DETAIL ⑫

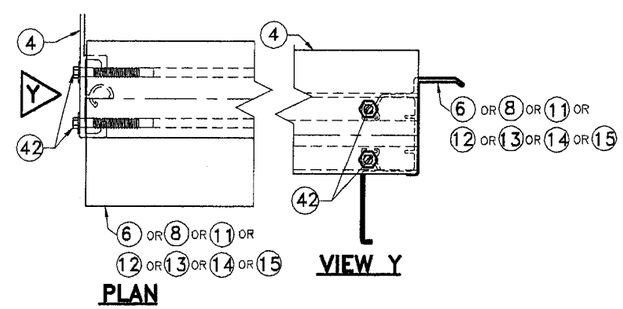

DETAIL X

F.B.C.(**H**igh **V**elocity **H**urricane **Z**one)

Approved as complying with the Florida Building Code
Date 02/28/2008
NOA# 07-0817.09
Miami Dade Product Control Division
By

MIAMI-DADE COUNTY

JUL 20 2007

P.E. SEAL/SIGNATURE/DATE

TILTECO INC.
TILLIT TESTING & ENGINEERING COMPANY
6355 N.W. 36th. St., Ste. 305, VIRGINIA GARDENS, FLORIDA 33166
Phone : (305)871-1530 . Fax : (305)871-1531
e-mail: tilteco@aol.com
EB-0006719
WALTER A. TILLIT Jr. P. E.
FLORIDA Lic. # 44167

EASTERN METAL SUPPLY, INC.
(ASSA # 1)
3600 23rd AVENUE SOUTH
LAKEWORTH, FL 33461
PH (561) 533-6061 FAX (561) 588-4780

© 2003 EASTERN METAL SUPPLY, INC.

BERTHA HV™
Accordion Shutter System

REV. No	DESCRIPTION	DATE
1		
2		
3		
4		
5		
6		

Drawn by: F.P.
DATE: 07/19/07
DRAWING No 07-195
SHEET 20 OF 26

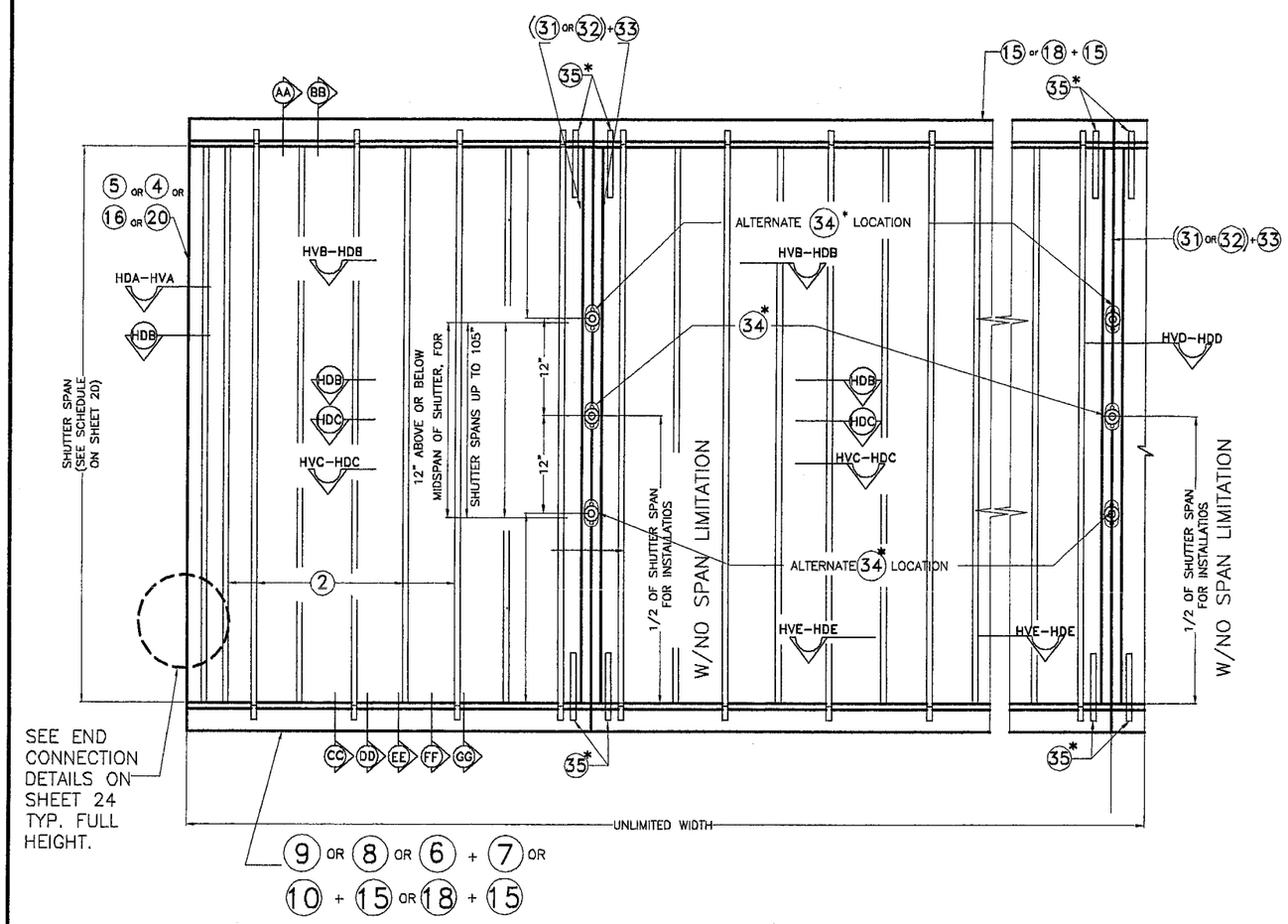

TYPICAL (2) HV BLADE SHUTTER ELEVATION

N.T.S.

* NOTES ON HD LOCKS AND CENTERMATES:

1. **MANDATORY CONDITION # 1:** ONE (34) H.D. LOCK SHALL BE USED FOR ANY SPAN AND INSTALLATION AT HEAVY DUTY SYMMETRICAL CENTERMATES, ((31) OR (32))+(33) AND AT ANY ELEVATION. (34) H.D. LOCK MAY BE USED AS AN INSIDE OR OUTSIDE LOCK, ATTACHED TO (33) HEAVY DUTY SYMMETRICAL CENTERMATES WITH (3) #8 x 3/8" LONG FLAT HEAD S.S. M.S. LOCKING RODS (35) ARE NOT MANDATORY, i.e. THEY ARE COMPLETELY OPTIONAL.

2. **MANDATORY CONDITION # 2:** LOCATION OF (34) H.D. LOCK SHALL BE AS INDICATED ON SHUTTER ELEVATION, i.e., FOR SHUTTER SPANS UP TO 105". (34) H.D. LOCK MAY BE INSTALLED AT MID HEIGHT OF SHUTTER OR AT 12" ABOVE OR BELOW MID HEIGHT OF SHUTTER. FOR SHUTTER SPANS GREATER THAN 105", (34) H.D. LOCK SHALL BE INSTALLED AT MID HEIGHT OF SHUTTER.

F.B.C.(**H**igh **V**elocity **H**urricane **Z**one)

Approved as complying with the Florida Building Code
Date 02/28/2008
NOA# 07-0817.09
Miami Dade Product Control Division
By Helena A. Mahr

MIAMI-DADE COUNTY

JUL 20 2007

P.E. SEAL/SIGNATURE/DATE

TILTECO INC.
TILLIT TESTING & ENGINEERING COMPANY
6355 N.W. 36th. St., Ste. 305, VIRGINIA GARDENS, FLORIDA 33166
Phone : (305)871-1530 . Fax : (305)871-1531
e-mail: tilteco@aol.com
EB-0006719
WALTER A. TILLIT Jr. P. E.
FLORIDA Lic. # 44167

EASTERN METAL SUPPLY, INC.
(ASSA # 1)
3600 23rd AVENUE SOUTH
LAKEWORTH, FL 33461
PH (561) 533-6061 FAX (561) 588-4780

© 2003 EASTERN METAL SUPPLY, INC.

BERTHA HV™
Accordion Shutter System

REV. No	DESCRIPTION	DATE
1		
2		
3		
4		
5		
6		

Drawn by: F.P.
DATE: 07/19/07
DRAWING No 07-195
SHEET 21 OF 26

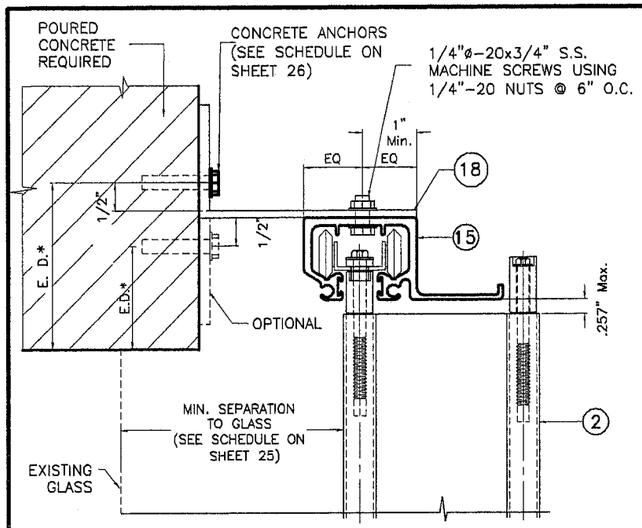

(AA) HD WALL HEADER INSTALLATION

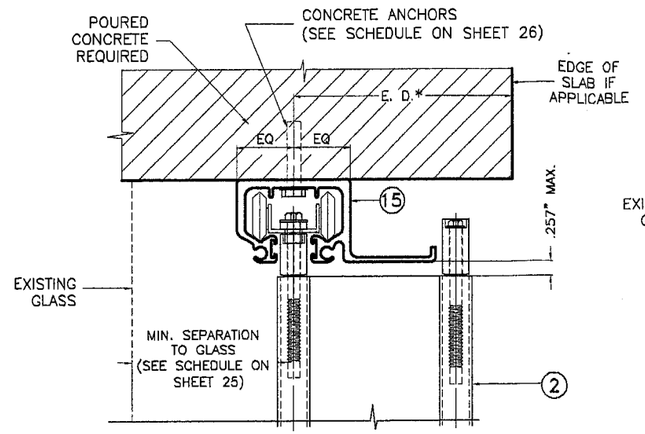

(BB) HD CEILING INSTALLATION

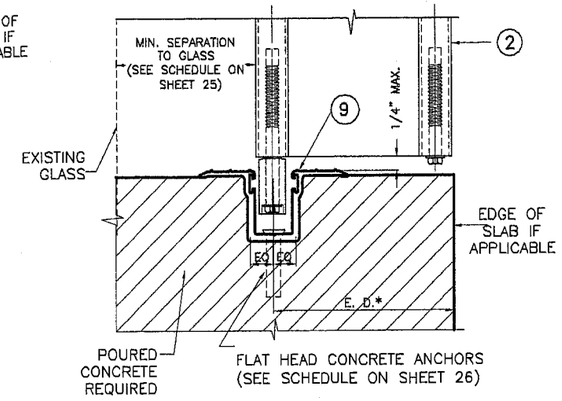

(CC) HD TRENCH INSTALLATION

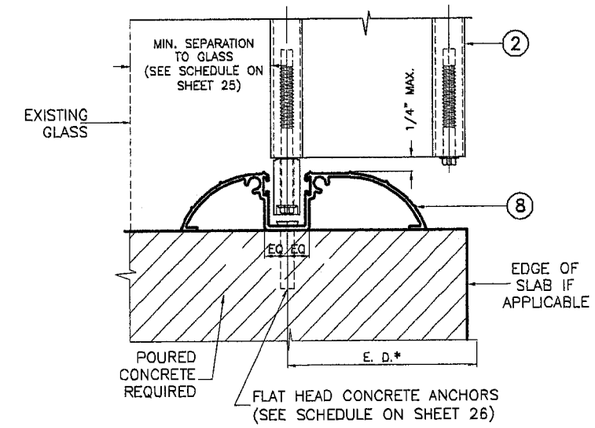

(DD) HD WALK-OVER INSTALLATION

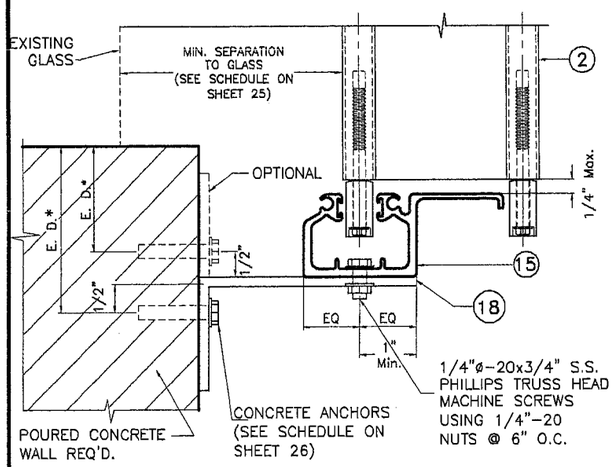

(EE) HD WALL SILL INSTALLATION

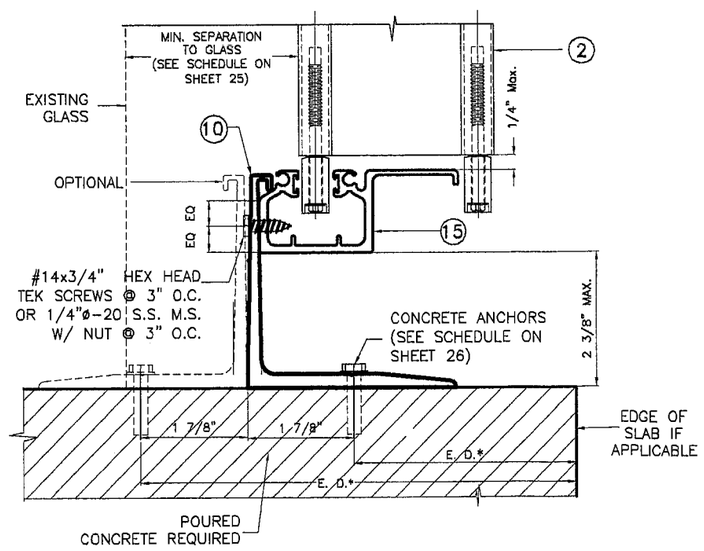

(FF) HD RAINGUARD INSTALLATION

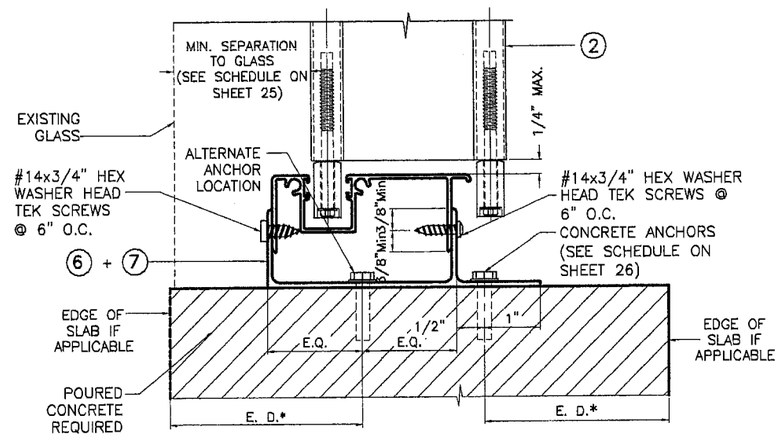

(GG) HD FLOOR INSTALLATION

NOTE FOR COMBINATION OF SECTIONS:

1- SEE SHEET 21 FOR TYPICAL SHUTTER ASSEMBLY
2- MOUNTING SECTIONS CAN BE COMBINED IN ANY WAY TO SUIT ANY INSTALLATION.

* E. D. = EDGE DISTANCE (SEE SPECIFICATIONS ON SHEET 26)

INSTALLATION DETAILS W/ ② HV BLADE

SCALE: 3/8"=1"

F.B.C.(**H**igh **V**elocity **H**urricane **Z**one)

Approved as complying with the Fla. Accessibility Code
Date: 02/28/2008
NOA: 07-0817.09
Miami-Dade Product Control
Division
By: Helena A. Melo

MIAMI-DADE COUNTY

JUL 20 2007

P.E. SEAL/SIGNATURE/DATE

TILTECO INC.

TILLIT TESTING & ENGINEERING COMPANY
6355 N.W. 36th. St., Ste. 305, VIRGINIA GARDENS, FLORIDA 33166
Phone : (305)871-1530 . Fax : (305)871-1531
e-mail: tilteco@aol.com
EB-0006719
WALTER A. TILLIT Jr. P. E.
FLORIDA Lic. # 44167

EASTERN METAL SUPPLY, INC.
(ASSA # 1)
3600 23rd AVENUE SOUTH
LAKEWORTH, FL 33461
PH (561) 533-6061 FAX (561) 588-4780

© 2003 EASTERN METAL SUPPLY, INC.

BERTHA HV™
Accordion Shutter System

REV. No	DESCRIPTION	DATE
1		
2		
3		
4		
5		
6		

Drawn by: F.P.
DATE: 07/19/07
DRAWING No 07-195
SHEET 22 OF 26

SEE END WALL CONNECTION DETAILS ON SHEET 24

INSTALLATION
② HV BLADE

* SEE NOTES ON LOCKING RODS (35) & HD (34) LOCKS ON SHEETS 21

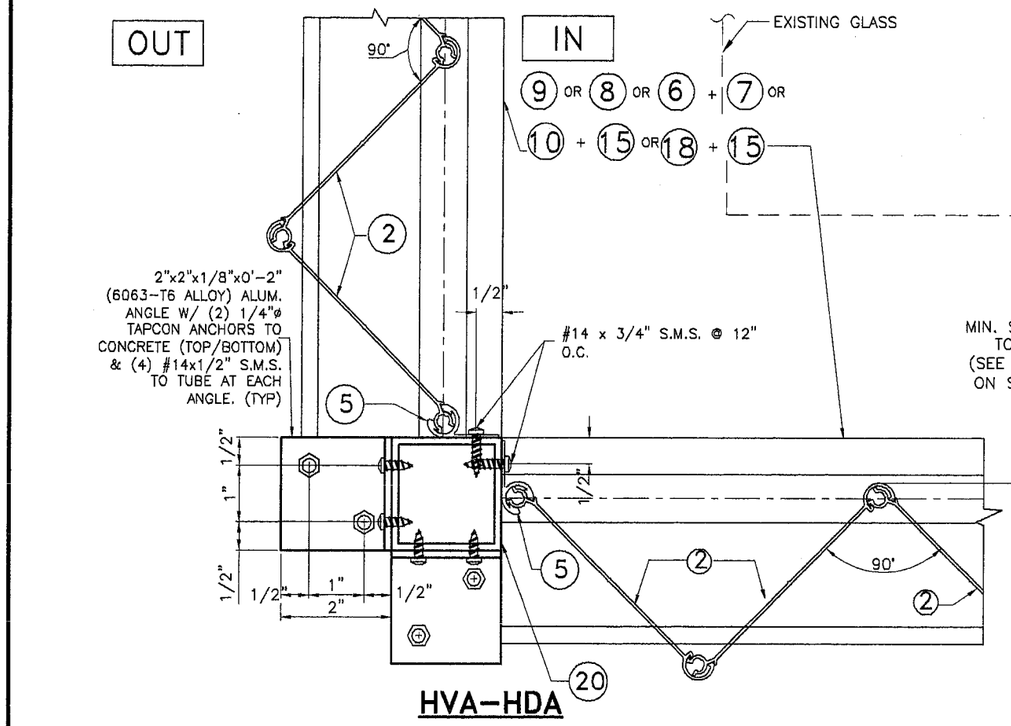

HVA-HDA

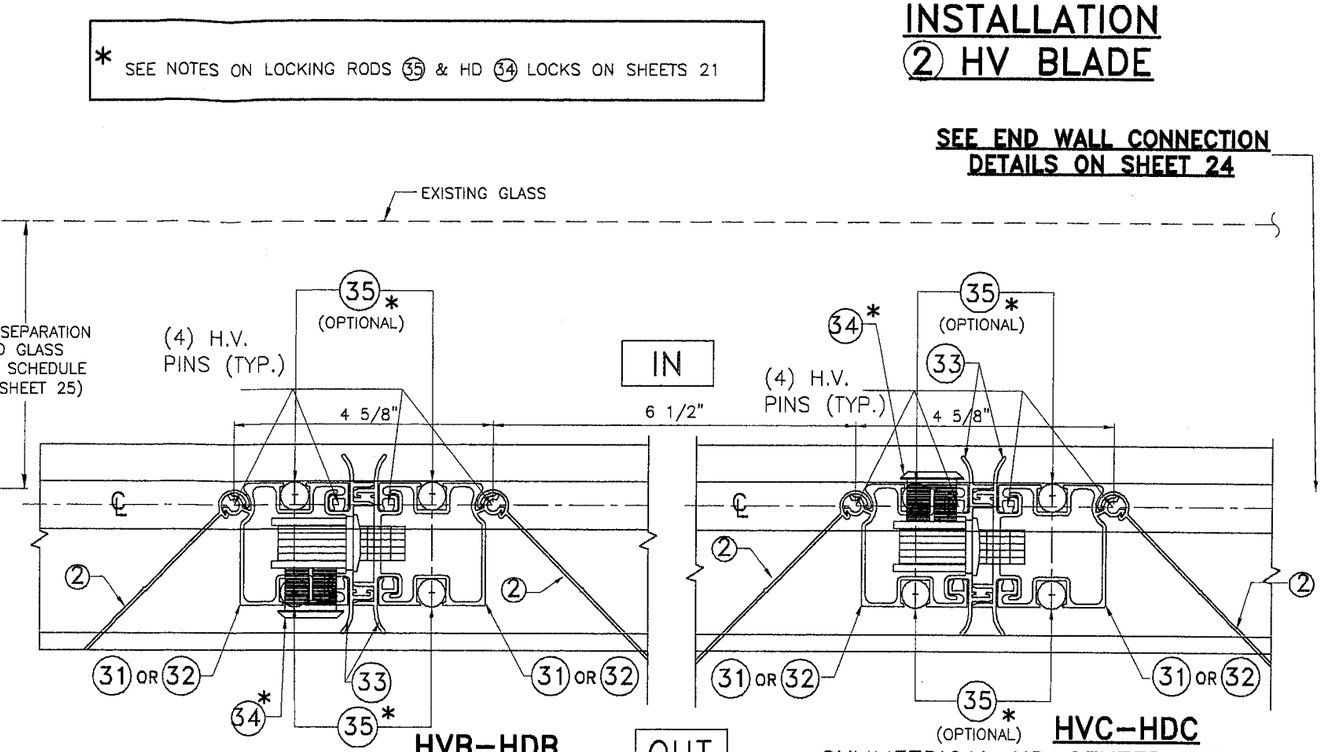

HVB-HDB
SYMMETRICAL HD CENTERMATES W/ (34)* LOCK (EXTERIOR)

HVC-HDC
SYMMETRICAL HD CENTERMATES W/ (34)* LOCK (INTERIOR)

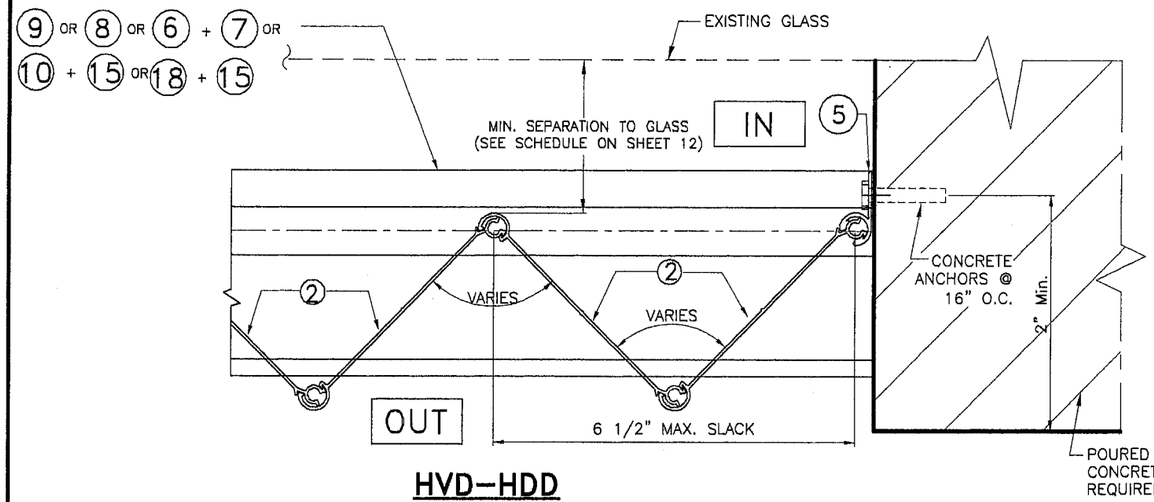

HVD-HDD

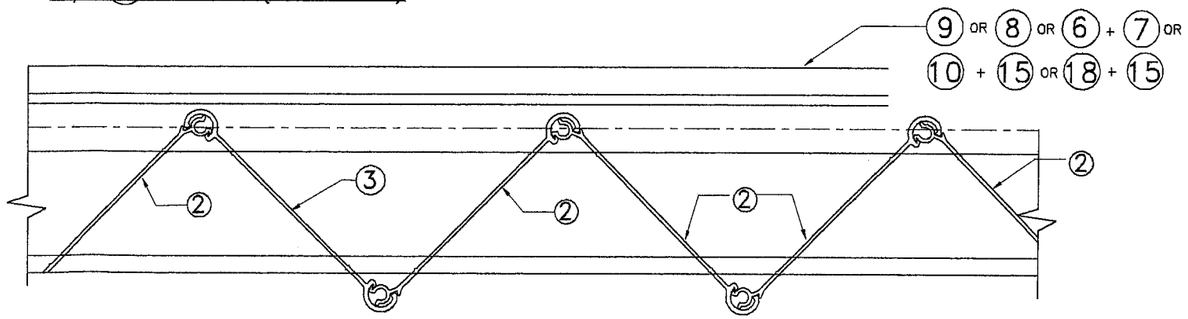

HVE-HDE

F.B.C.(**H**igh **V**elocity **H**urricane **Z**one)

Approved as complying with the Florida Building Code
Date 02/28/2008
NOA# 07-0817.09
Miami Dade Product Control Division
By Helen A. Melo

MIAMI-DADE COUNTY

JUL 20 2007

P.E. SEAL/SIGNATURE/DATE

TILTECO INC.
TILLIT TESTING & ENGINEERING COMPANY
6355 N.W. 36th. St., Ste. 305, VIRGINIA GARDENS, FLORIDA 33166
Phone : (305)871-1530 . Fax : (305)871-1531
e-mail: tilteco@aol.com
EB-0006719
WALTER A. TILLIT Jr. P. E.
FLORIDA Lic. # 44167

EASTERN METAL SUPPLY, INC.
(ASSA # 1)
3600 23rd AVENUE SOUTH
LAKEWORTH, FL 33461
PH (561) 533-6061 FAX (561) 588-4780

© 2003 EASTERN METAL SUPPLY, INC.

BERTHA HV™
Accordion Shutter System

REV. No	DESCRIPTION	DATE
1		
2		
3		
4		
5		
6		

Drawn by: F.P.
DATE: 07/19/07
DRAWING No 07-195
SHEET 23 OF 26

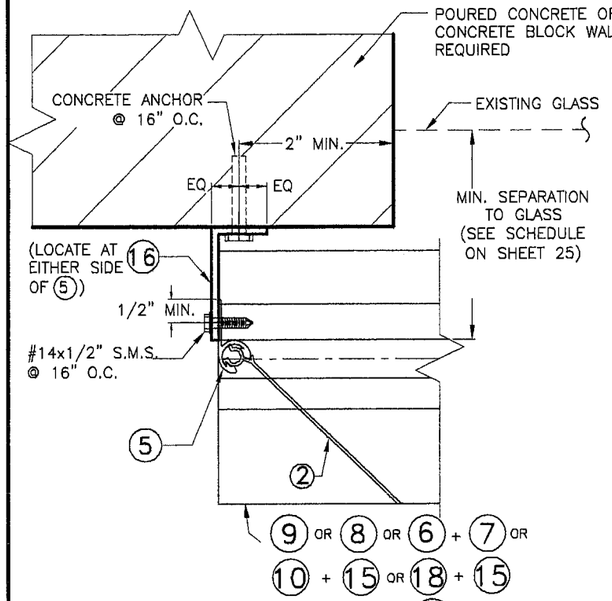

END CONNECTION DETAIL 1

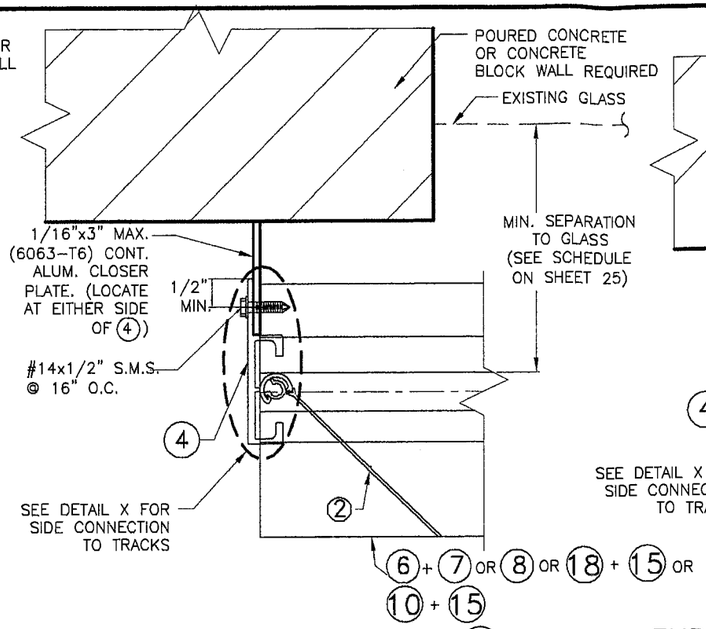

END CONNECTION DETAIL 2

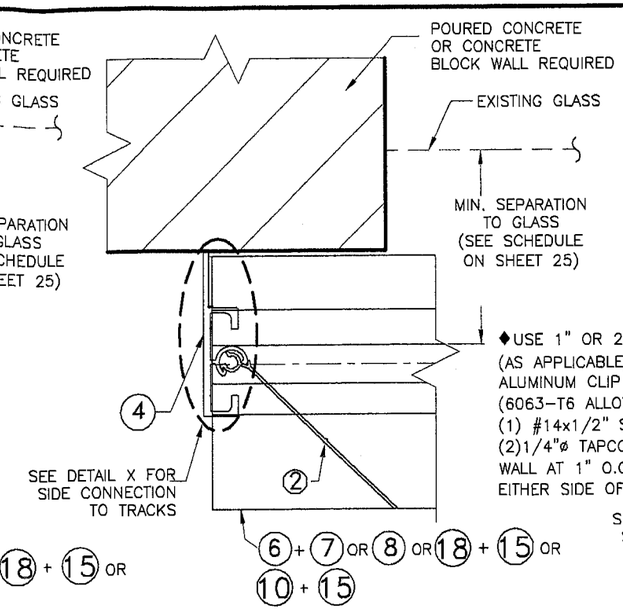

END CONNECTION DETAIL 3

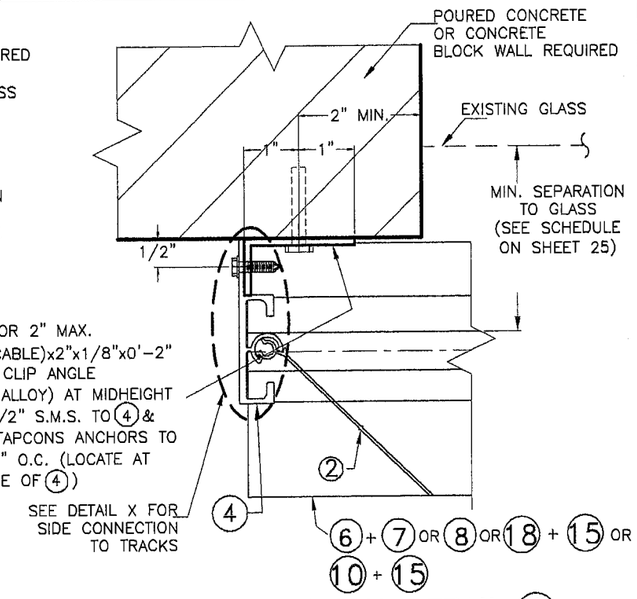

END CONNECTION DETAIL 4

◆ REQUIRED ONLY FOR SPANS GREATER THAN 12'-0"

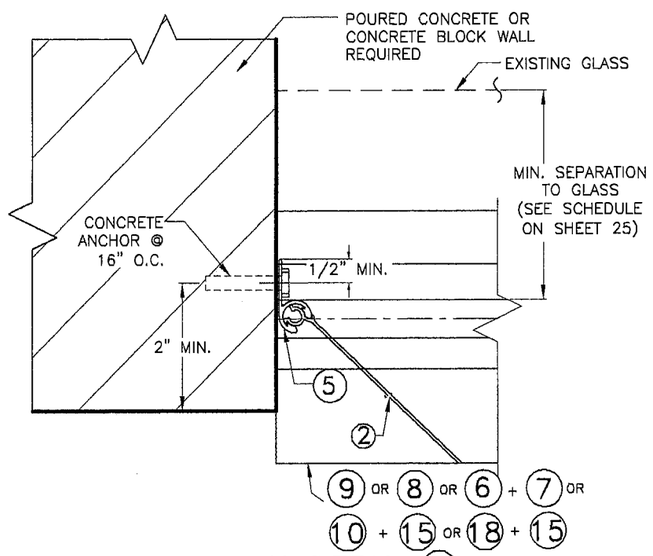

END CONNECTION DETAIL 5

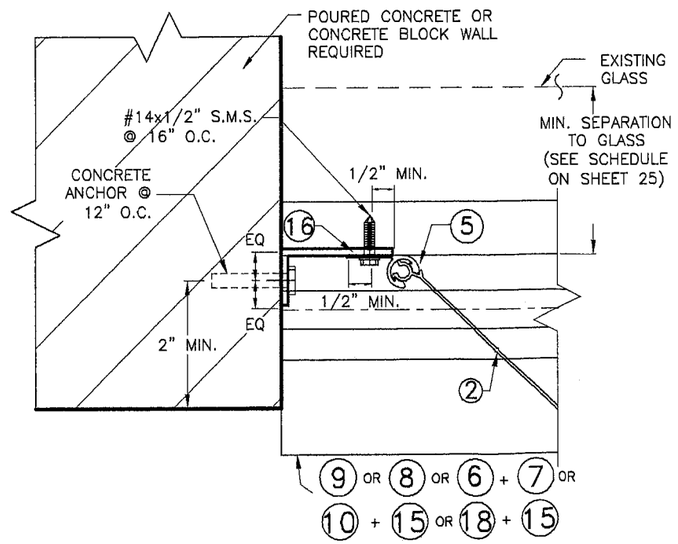

END CONNECTION DETAIL 6

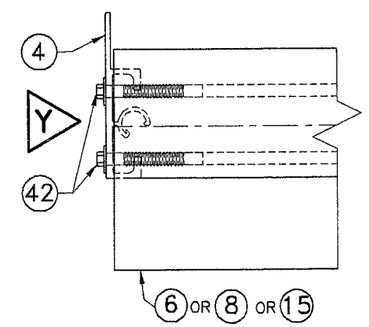

PLAN

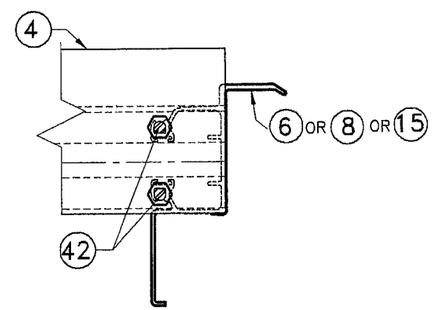

VIEW Y

DETAIL X

END INSTALLATION
2 HV BLADE INTO CONCRETE OR CONCRETE BLOCK WALL.

F.B.C.(**H**igh **V**elocity **H**urricane **Z**one)

Approved as complying with the Florida Building Code
Date 02/28/2008
NOA# 07-0817.09
Miami Dade Product Control Division
By Helena A. Molina

MIAMI-DADE COUNTY

JUL 20 2007

P.E. SEAL/SIGNATURE/DATE

TILTECO INC.
TILLIT TESTING & ENGINEERING COMPANY
6355 N.W. 36th. St., Ste. 305, VIRGINIA GARDENS, FLORIDA 33166
Phone : (305)871-1530 , Fax : (305)871-1531
e-mail: tilteco@aol.com
EB-0006719
WALTER A. TILLIT Jr. P. E.
FLORIDA Lic. # 44167

EASTERN METAL SUPPLY, INC.
(ASSA # 1)
3600 23rd AVENUE SOUTH
LAKEWORTH, FL 33461
PH (561) 533-6061 FAX (561) 588-4780

© 2003 EASTERN METAL SUPPLY, INC.

BERTHA HV™
Accordion Shutter System

REV. No	DESCRIPTION	DATE
1		
2		
3		
4		
5		
6		

Drawn by: F.P.
DATE: 07/19/07
DRAWING No 07-195
SHEET 24 OF 26

MAXIMUM SHUTTER SPAN
"L+" OR "L−" (ft.) *
INSTALLATIONS W/ **SYMMETRICAL HD CENTERMATES** (31) OR (32)
W/ ONE HD (34) LOCK & NO LOCKING RODS (35) ♦

MAXIMUM DESIGN LOAD (p.s.f.) (+ OR −)	POURED CONCRETE INSTALLATIONS	
	ALL MOUNTING CONDITIONS	
	L + (ft)	L − (ft)
30 OR LESS	15'−5"	18'−0"
35	14'−10"	18'−0"
40	14'−4"	17'−10"
45	13'−11"	17'−6"
50	13'−6"	17'−0"
55	13'−3"	16'−10"
60	12'−11"	16'−2"
65	12'−8"	15'−6"
70	12'−6"	14'−11"
75	12'−3"	14'−5"
80	12'−0"	14'−0"
85	11'−10"	13'−7"
90	11'−6"	13'−2"
95	11'−3"	12'−10"
100	10'−6"	12'−6"
105	10'−0"	12'−2"
110	9'−6"	11'−11"
115	9'−1"	11'−8"
120	8'−9"	11'−5"
125	−	11'−2"
130	−	10'−11"
135	−	10'−9"
140	−	10'−6"
145	−	10'−4"
150	−	10'−2"
155	−	10'−0"
160	−	9'−10"
165	−	9'−9"
170	−	9'−7"
175	−	9'−5"
180	−	9'−4"
185	−	9'−2"
190	−	9'−0"
195	−	8'−9"

* NOTES:

(1) L+: MAXIMUM ALLOWABLE SPAN FOR A GIVEN POSITIVE DESIGN LOAD.
L−: MAX. ALLOWABLE SPAN FOR A GIVEN NEGATIVE DESIGN LOAD.

(2) PROCEDURE TO DETERMINE MAXIMUM SPAN FOR WALL MOUNTINGS OR FLOOR/CEILING:

GIVEN A POSITIVE DESIGN LOAD, DETERMINE MAXIMUM SPAN "L+" FROM SCHEDULE.
GIVEN A NEGATIVE DESIGN LOAD, DETERMINE MAXIMUM SPAN "L−" FROM SCHEDULE.

FINAL MAXIMUM ALLOWABLE SPAN IS EQUAL TO THE MINIMUM DETERMINED SPAN BETWEEN "L+" AND "L−".

(3) PROCEDURE TO DETERMINE MAXIMUM SPAN FOR COMBINATIONS IN BETWEEN WALL W/ FLOOR/CEILING MOUNTINGS:

FOR A GIVEN POSITIVE DESIGN LOAD:
DETERMINE:
L_{1+}= MAX. SPAN FOR WALL MOUNTING INSTALLATIONS.
L_{2+}= MAX. SPAN FOR FLOOR/CEILING MOUNTING INSTALLATIONS.

FOR A GIVEN NEGATIVE DESIGN LOAD:
DETERMINE:
L_{1-}= MAX. SPAN FOR WALL MOUNTING INSTALLATIONS.
L_{2-}= MAX. SPAN FOR FLOOR/CEILING MOUNTING INSTALLATIONS.

FINAL MAXIMUM ALLOWABLE SPAN IS EQUAL TO THE MINIMUM BETWEEN "L_{1+}", "L_{2+}", "L_{1-}" AND "L_{2-}"

(4) GO TO ANCHOR SCHEDULE WITH FINAL MAXIMUM ALLOWABLE SPAN AND MAXIMUM DESIGN LOAD TO DETERMINE MAXIMUM ANCHOR SPACING.

♦ SEPARATION TO GLASS REQUIREMENTS

MINIMUM SEPARATION TO GLASS FOR SHUTTERS INSTALLED AT ALL ELEVATIONS OF BUILDING IS 3".

INSTALLATION LEGEND	
SUBSTRATE / MOUNTINGS	POURED CONCRETE (SHEET 22)
WALL MOUNTING	AA & EE
FLOOR/CEILING MOUNTING	BB, CC, DD, FF & GG

(2) HV BLADE

F.B.C.(**H**igh **V**elocity **H**urricane **Z**one)

Approved as complying with the Florida Building Code
Date 02/28/2008
NOA# 07-0817.09
Miami Dade Product Control Division
By

MIAMI−DADE COUNTY

JUL 20 2007

P.E. SEAL/SIGNATURE/DATE

TILTECO INC.
TILLIT TESTING & ENGINEERING COMPANY
6355 N.W. 36th. St., Ste. 305, VIRGINIA GARDENS, FLORIDA 33166
Phone : (305)871−1530 . Fax : (305)871−1531
e−mail: tilteco@aol.com
EB−0006719
WALTER A. TILLIT Jr. P. E.
FLORIDA Lic. # 44167

EASTERN METAL SUPPLY, INC.
(ASSA # 1)
3600 23rd AVENUE SOUTH
LAKEWORTH, FL 33461
PH (561) 533−6061 FAX (561) 588−4780

© 2003 EASTERN METAL SUPPLY, INC.

BERTHA HV ™
Accordion Shutter System

REV. No	DESCRIPTION	DATE
1		
2		
3		
4		
5		
6		

Drawn by: F.P.
DATE: 07/19/07
DRAWING No **07−195**
SHEET **25 OF 26**

ANCHORS SPACING LEGEND

TAPCON
CRETE–FLEX SS4

MAXIMUM DESIGN PRESSURE RATING (p.s.f.) AND CORRESPONDING MAXIMUM ANCHOR* SPACING (in.) SCHEDULE FOR A GIVEN MAX. SHUTTER SPAN, MAXIMUM DESIGN LOAD AND A CORRESPONDING MOUNTING TYPE FOR CONCRETE INSTALLATIONS

MAXIMUM SPAN (ft)	POURED CONCRETE				
	ALL MOUNTINGS AA THRU GG (SHEET 22)				
	USE MAXIMUM VALUES BETWEEN POSITVE AND NEGATIVE LOADS				
	50 OR LESS	>50 TO 90	>90 TO 120	>120 TO 160	>160 TO 195
8'–9" OR LESS	8"	4 1/2"	3 1/2"	2 1/2"	–
	11"	6 1/2"	4 1/2"	3 1/2"	3"
>8'–9" UP TO 12'–1"	6"	3"	2 1/2"	–	–
	8"	4 1/2"	3 1/2"	3"	–
>12'–1" UP TO 18'–0"	4"	3"	2 1/2"	–	–
	6"	4"	3 1/2"	–	–

*SPECIFICATIONS ON ANCHOR REQUIREMENTS: POURED CONCRETE SUBSTRATES

1. ANCHORS TO WALL SHALL BE AS FOLLOWS:
(A) TO EXISTING POURED CONCRETE: (Min. f'c = 3.350 ksi)
– 1/4"ø TAPCON ANCHORS, AS MANUFACTURED BY I.T.W. RAMSET/ RED HEAD.
– 1/4"ø CRETE–FLEX SS4 ANCHORS AS MANUFACTURED BY ELCO TEXTRON.

NOTES:
A.1) MINIMUM EMBEDMENT INTO POURED CONCRETE OF TAPCON OR CRETE–FLEX SS4 ANCHORS IS 1 3/4".

A.2) IN CASE THAT PRECAST STONE, PRECAST CONCRETE PANELS, PAVERS OR ANY VENEER BE FOUND ON THE EXISTING WALL OR FLOOR, ANCHORS SHALL BE LONG ENOUGH TO REACH THE MAIN STRUCTURE BEHIND SAID WALL FINISHES. ANCHORAGE SHALL BE AS INDICATED ON NOTE A.1) ABOVE. FOR INSTALLATIONS ON VINYL SIDING OR EIFS CONSULT THIS ENGINEER.

(B) ANCHORS SHALL BE INSTALLED FOLLOWING ALL OF THE RECOMMENDATIONS AND SPECIFICATIONS OF THE ANCHOR'S MANUFACTURER.

(C) SEE SCHEDULE BELOW FOR EDGE DISTANCE (E.D.) VERSUS SPACING RELATIONSHIP FOR ANCHORS.

EDGE DISTANCE VERSUS SPACING FOR ANCHORS

MAXIMUM ANCHOR SPACINGS ARE VALID FOR 3" EDGE DISTANCE FOR 1/4"ø TAPCON AND 1/4"ø CRETE–FLEX SS4. FOR E. D. LESS THAN THE ABOVE MENTIONED, REDUCE ANCHOR SPACING BY MULTIPLYING SPACING SHOWN ON SCHEDULE BY THE FOLLOWING FACTORS. THIS OPERATION IS ONLY ALLOWED IF REDUCED SPACING OBTAINED USING FACTOR IS NOT LESS THAN MINIMUM SPACING INDICATED FOR EACH ANCHOR TYPE.

ACTUAL E. D.	FACTOR	
	CRETE–FLEX SS4	1/4"ø TAPCON
	MIN. SPACING = 3"	MIN. SPACING = 3"
2 1/2"	0.66	0.66
2"	0.50	0.50

(2) HV BLADE

F.B.C.(**H**igh **V**elocity **H**urricane **Z**one)

Approved as complying with the Florida Building Code
Date 02/28/2008
NOA 07-0817.09
Miami-Dade Product Control
Division
By

MIAMI–DADE COUNTY

JUL 20 2007

P.E. SEAL/SIGNATURE/DATE

TILTECO INC.
TILLIT TESTING & ENGINEERING COMPANY
6355 N.W. 36th. St., Ste. 305, VIRGINIA GARDENS, FLORIDA 33166
Phone : (305)871–1530 . Fax : (305)871–1531
e-mail: tilteco@aol.com
EB–0006719
WALTER A. TILLIT Jr. P. E.
FLORIDA Lic. # 44167

EASTERN METAL SUPPLY, INC.
(ASSA # 1)
3600 23rd AVENUE SOUTH
LAKEWORTH, FL 33461
PH (561) 533–6061 FAX (561) 588–4780

© 2003 EASTERN METAL SUPPLY, INC.

BERTHA HV ™
Accordion Shutter System

REV. No	DESCRIPTION	DATE
1		
2		
3		
4		
5		
6		

Drawn by: F.P.
DATE: 07/19/07
DRAWING No 07–195
SHEET 26 OF 26