MIAMI-DADE COUNTY

BUILDING CODE COMPLIANCE OFFICE (BCCO)
PRODUCT CONTROL DIVISION

MIAMI-DADE COUNTY, FLORIDA
METRO-DADE FLAGLER BUILDING
140 WEST FLAGLER STREET, SUITE 1603
MIAMI, FLORIDA 33130-1563
(305) 375-2901 FAX (305) 375-2908
www.buldingcodeonline.com

NOTICE OF ACCEPTANCE (NOA)

Andersen Corporation
100 Fourth Ave. North
Bayport, MN 55003

SCOPE:

This NOA is being issued under the applicable rules and regulations governing the use of construction materials. The documentation submitted has been reviewed by Miami-Dade County Product Control Division and accepted by the Board of Rules and Appeals (BORA) to be used in Miami Dade County and other areas where allowed by the Authority Having Jurisdiction (AHJ).

This NOA shall not be valid after the expiration date stated below. The Miami-Dade County Product Control Division (In Miami Dade County) and/or the AHJ (in areas other than Miami Dade County) reserve the right to have this product or material tested for quality assurance purposes. If this product or material fails to perform in the accepted manner, the manufacturer will incur the expense of such testing and the AHJ may immediately revoke, modify, or suspend the use of such product or material within their jurisdiction. BORA reserves the right to revoke this acceptance, if it is determined by Miami-Dade County Product Control Division that this product or material fails to meet the requirements of the applicable building code.

This product is approved as described herein, and has been designed to comply with the Florida Building Code, including the High Velocity Hurricane Zone.

DESCRIPTION: Series Perma-Shield Vinyl Clad Wood Casement Window – L.M.I.

APPROVAL DOCUMENT: Drawing No. **W01-46**, titled "Perma-Shield Vinyl Clad Wd. Casement Wdw. (L.M.I.)", sheets 1 through 6 of 6, dated 07/23/01, with revision D dated 02/06/07, prepared by Al-Farooq Corporation, signed and sealed by Humayoun Farooq, P.E., bearing the Miami-Dade County Product Control Revision stamp with the Notice of Acceptance number and expiration date by the Miami-Dade County Product Control Division.

MISSILE IMPACT RATING: Large and Small Missile Impact Resistant

LABELING: Each unit shall bear a permanent label with the manufacturer's name or logo, city, state and following statement: "Miami-Dade County Product Control Approved", unless otherwise noted herein.

RENEWAL of this NOA shall be considered after a renewal application has been filed and there has been no change in the applicable building code negatively affecting the performance of this product.

TERMINATION of this NOA will occur after the expiration date or if there has been a revision or change in the materials, use, and/or manufacture of the product or process. Misuse of this NOA as an endorsement of any product, for sales, advertising or any other purposes shall automatically terminate this NOA. Failure to comply with any section of this NOA shall be cause for termination and removal of NOA.

ADVERTISEMENT: The NOA number preceded by the words Miami-Dade County, Florida, and followed by the expiration date may be displayed in advertising literature. If any portion of the NOA is displayed, then it shall be done in its entirety.

INSPECTION: A copy of this entire NOA shall be provided to the user by the manufacturer or its distributors and shall be available for inspection at the job site at the request of the Building Official.

This NOA **revises and renews NOA # 05-0202.01** and consists of this page 1 and evidence pages E-1 and E-2, as well as approval document mentioned above.

The submitted documentation was reviewed by **Manuel Perez, P.E.**

PRODUCT CONTROL ACCEPTED

Andersen Corporation

NOTICE OF ACCEPTANCE: EVIDENCE SUBMITTED

A. DRAWINGS

1. Manufacturer's die drawings and sections.
2. Drawing No. **W01-46**, titled "Perma-Shield Vinyl Clad Wd. Casement Wdw. (L.M.I.)", sheets 1 through 6 of 6, dated 07/23/01, with revision D dated 02/06/07, prepared by Al-Farooq Corporation, signed and sealed by Humayoun Farooq, P.E.

B. TESTS

1. Test reports on: 1) Air Infiltration Test, per FBC, TAS 202-94
   2) Uniform Static Air Pressure Test, Loading per FBC TAS 202-94
   3) Water Resistance Test, per FBC, TAS 202-94
   4) Large Missile Impact Test per FBC, TAS 201-94
   5) Cyclic Wind Pressure Loading per FBC, TAS 203-94
   6) Forced Entry Test, per FBC 2411 3.2.1, TAS 202-94

   along with marked-up drawings and installation diagram of a vinyl clad wood casement window, prepared by Architectural Testing Inc., Test Report No. **ATI-65619.01-201-18**, dated 06/29 to 07/06/06, signed and sealed by Joseph A. Reed, P.E.
2. Test reports on: 1) Air Infiltration Test, per FBC, TAS 202-94
   2) Uniform Static Air Pressure Test, Loading per FBC TAS 202-94
   3) Water Resistance Test, per FBC, TAS 202-94
   4) Large Missile Impact Test per FBC, TAS 201-94
   5) Cyclic Wind Pressure Loading per FBC, TAS 203-94

   along with marked-up drawings and installation diagram of a vinyl clad wood fixed window, prepared by Architectural Testing Inc., Test Report No. **ATI-65620.01-201-18**, dated 06/29/ to 07/05/06, signed and sealed by Joseph A. Reed, P.E.
3. Test reports on: 1) Air Infiltration Test, per TAS 202-94.
   2) Uniform Load Static Air Pressure Test, per FBC, TAS 202-94.
   3) Water Resistance Test, per FBC, TAS 202-94.
   4) Large Missile Impact Test per FBC, TAS 201-94
   5) Cyclic Wind Pressure Loading per FBC, TAS 203-94
   6) Forced Entry Test, per FBC 2411.3.2.1 and TAS 202-94

   along with the manufacturer's parts and section drawings marked-up by Architectural Testing Inc., Test Report No. **ATI-02-45335.01** dated 05/21-23/03, signed and sealed by Joseph A. Reed, P.E. ***(Submitted under NOA # 03-0919.03)***
4. Test reports on: 1) Uniform Static Air Pressure Test, Loading per FBC, TAS 202-94
   2) Large Missile Impact Test per FBC, TAS 201-94
   3) Cyclic Wind Pressure Loading per FBC, TAS 203-94

   along with marked-up drawings and installation diagram of a vinyl clad wood casement window, prepared by Architectural Testing, Inc., Test Report No. **02-33449.01**, dated 9/10/01, signed and sealed by Allen Reeves, P.E.
   (Submitted under NOA # 03-0919.03)

Manuel Perez, P.E.
Product Control Examiner
NOA No. 07-0820.02
Expiration Date: September 19, 2012
Approval Date: September 27, 2007

5. Test reports on 1) Air Infiltration Test, per FBC, TAS 202-94
   2) Uniform Static Air Pressure Test, Loading per FBC, TAS 202-94
   3) Water Resistance Test, per FBC, TAS 202-94
   4) Large Missile Impact Test per FBC, TAS 201-94
   5) Cyclic Wind Pressure Loading per FBC, TAS 203-94
   6) Forced Entry Test, FBC 2411.3.2.1 and TAS 202-94

   along with marked-up drawings and installation diagram of a vinyl clad wood casement window, prepared by Architectural Testing, Inc., Test Report No. **02-33001.01**, dated 2/1/01, signed and sealed by Allen Reeves, P.E.***(Submitted under NOA # 03-0919.03)***

C. CALCULATIONS

1. Anchor verification calculations and structural analysis, complying with FBC-2004, dated 3/8/07, prepared by Al-Farooq Corporation, signed and sealed by Humayoun Farooq, P.E.
   Complies with ASTM E1300-02

D. QUALITY ASSURANCE

1. Miami Dade Building Code Compliance Office (BCCO).

E. MATERIAL CERTIFICATIONS

1. Notice of Acceptance No. **06-1205.10** issued to E.I. DuPont DeNemours & Co., Inc. for their "**DuPont Sentry Glass ® Plus**" dated 02/15/07, expiring on 01/14/08.
2. Notice of Acceptance No. **06-0216.06** issued to Solutia Inc. for their "**Saflex IIIG Clear or colored Interlayer**" dated 05/04/06, expiring on 05/21/11.

F. STATEMENTS

1. Statement letter of conformance, dated January 26, 2007, signed and sealed by Humayoun Farooq, P.E.
2. Statement letter of no financial interest, dated January 26, 2007, signed and sealed by Humayoun Farooq, P.E.
3. Laboratory compliance letters for Test Reports No. **ATI- 65619.01-201-18** and **ATI-65620.01-201-18**, issued by Architectural Testing, Inc., dated November 6, 2006, signed and sealed by Joseph A. Reed, P.E.

G. OTHER

1. Notice of Acceptance No. **05-0202.01**, issued to Andersen Corporation, for their Series Perma-Shield Vinyl Clad Wood Casement Window, approved on 05/21/05 and expiring on 09/19/07.

Manuel Perez, P.E.
Product Control Examiner
NOA No. 07-0820.02
Expiration Date: September 19, 2012
Approval Date: September 27, 2007

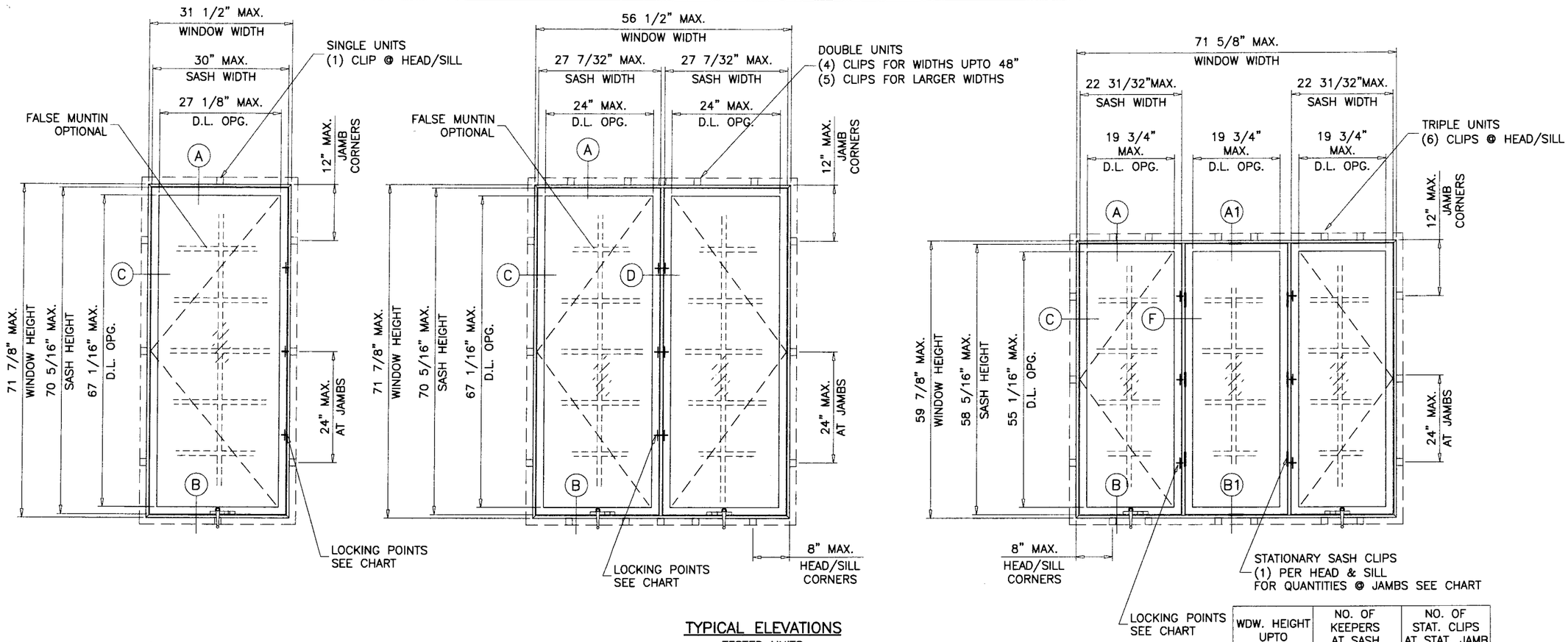

WDW. HEIGHT UPTO	NO. OF KEEPERS AT SASH	NO. OF STAT. CLIPS AT STAT. JAMB
28-3/8"	1	1
40-13/16"	2	2
59-7/8"	3	3
71-7/8"	3	4

TYPICAL ELEVATIONS

TESTED UNITS

'PERMA-SHIELD' VINYL CLAD WOOD CASEMENT WINDOW

APPROVAL APPLIES TO SINGLE, DOUBLE OR TRIPLE WINDOWS IN ANY COMBINATION OF VENTING OR STATIONARY UNITS.

ALSO COMBINATIONS OF CASMT/CASMT OR CASEMENT WITH OTHER WINDOW TYPES USING MIAMI-DADE COUNTY APPROVED MULLIONS IN BETWEEN.

LOWER DESIGN PRESSURE FROM WINDOWS OR MULLION APPROVAL WILL APPLY TO ENTIRE SYSTEM.

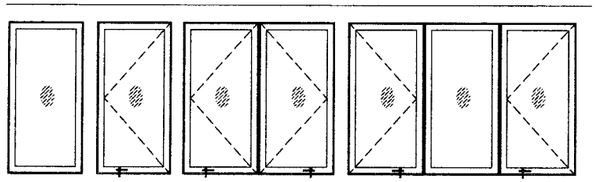

THIS PRODUCT HAS BEEN DESIGNED AND TESTED TO COMPLY WITH THE REQUIREMENTS OF THE FLORIDA BUILDING CODE 2004 EDITION INCLUDING HIGH VELOCITY HURRICANE ZONE (HVHZ).

WOOD BUCKS BY OTHERS, MUST BE ANCHORED PROPERLY TO TRANSFER LOADS TO THE STRUCTURE.

ANCHORS SHALL BE AS LISTED, SPACED AS SHOWN ON DETAILS, ANCHORS EMBEDMENT TO BASE MATERIAL SHALL BE BEYOND WALL DRESSING OR STUCCO.

ANCHORING OR LOADING CONDITIONS NOT SHOWN IN THESE DETAILS ARE NOT PART OF THIS APPROVAL.

A LOAD DURATION INCREASE IN ALLOWABLE STRESS IS USED IN DESIGN OF ANCHORS INTO WOOD ONLY.

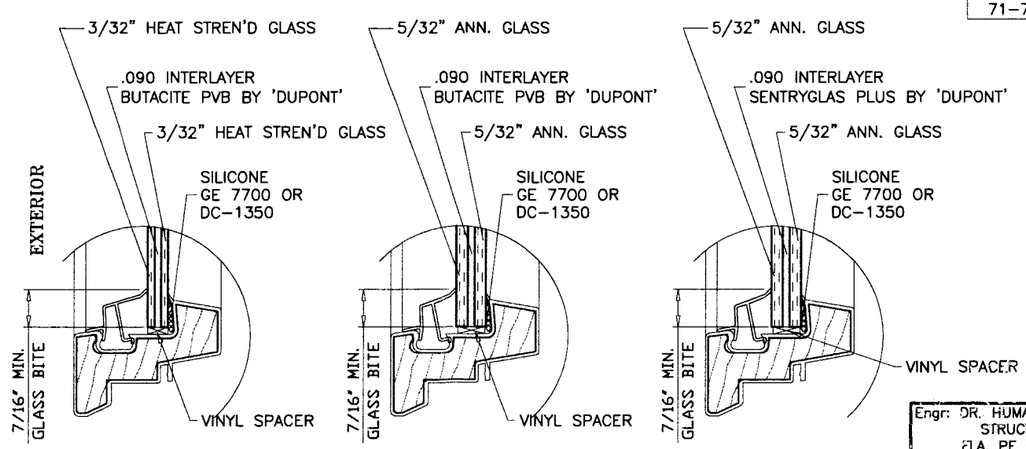

GLASS TYPE 'A' GLASS TYPE 'B' GLASS TYPE 'C'

GLAZING OPTIONS

THESE WINDOWS ARE RATED FOR LARGE MISSILE IMPACT. SHUTTERS ARE NOT REQUIRED.

LAMINATED GLASS
LARGE MISSILE IMPACT

Engr: DR. HUMAYOUN FAROOQ
STRUCTURES
FLA. PE # 16557
C.A.N. 3538

MAR 1 2 2007

PRODUCT REVISED
as complying with the Florida
Building Code
Acceptance No. 07-0820.02
Expiration Date SEPT. 19, 2012
By Manuel Perez
Miami-Dade Product Control
Division

AL-FAROOQ CORPORATION
ENGINEERS & PRODUCT DEVELOPMENT
1235 S.W. 87 AVE
MIAMI, FLORIDA 33174
TEL. (305) 264-8100 FAX. (305) 262-6978

COMP-ANL\W01-46AC

'PERMA-SHIELD' VINYL CLAD WD. CASEMENT WDW. (L.M.I.)

ANDERSEN CORPORATION
100 FOURTH AVE. NORTH
BAYPORT, MN. 55003-1096
TEL. (800) 426-7691 FAX (-)

revisions:

no	date	by	description
A	08.09.02		REV. PER BCCO COMMENTS
B	08.20.03		JAMB CLIPS SPACING REV.
C	10.29.04		NOTE REV.
D	02.06.07		UPDATED FOR 2004 FBC

date: 07-23-01
scale: 1/2"=1'-0"
dr. by: HAMID
chk. by:

drawing no.
W01-46

sheet 1 of 6

DESIGN LOAD CAPACITY – PSF (SINGLE UNITS)

WINDOW DESCRIPTION	UNIT WIDTH INCHES	UNIT HT. INCHES	VENTING (X) GLASS TYPE 'A' EXT.(+)	VENTING (X) GLASS TYPE 'A' INT.(–)	VENTING (X) GLASS TYPE 'B' EXT.(+)	VENTING (X) GLASS TYPE 'B' INT.(–)	VENTING (X) GLASS TYPE 'C' EXT.(+)	VENTING (X) GLASS TYPE 'C' INT.(–)	STATIONARY (O) GLASS TYPE 'A' EXT.(+)	STATIONARY (O) GLASS TYPE 'A' INT.(–)	STATIONARY (O) GLASS TYPE 'B' EXT.(+)	STATIONARY (O) GLASS TYPE 'B' INT.(–)	STATIONARY (O) GLASS TYPE 'C' EXT.(+)	STATIONARY (O) GLASS TYPE 'C' INT.(–)
CR12	17"	24–1/8"	67.0	82.0	60.0	65.0	50.0	65.0	67.0	82.0	60.0	65.0	50.0	65.0
CN12	20–1/2"		67.0	82.0	60.0	65.0	50.0	65.0	67.0	82.0	60.0	65.0	50.0	65.0
C12	24–1/8"		67.0	82.0	60.0	65.0	50.0	65.0	67.0	82.0	60.0	65.0	50.0	65.0
CW12	28–3/8"		67.0	82.0	60.0	65.0	50.0	65.0	67.0	82.0	60.0	65.0	50.0	65.0
CX12	31–1/2"		67.0	82.0	60.0	65.0	50.0	65.0	67.0	82.0	60.0	65.0	50.0	65.0
CR125	17"	28–3/8"	67.0	82.0	60.0	65.0	50.0	65.0	67.0	82.0	60.0	65.0	50.0	65.0
CN125	20–1/2"		67.0	82.0	60.0	65.0	50.0	65.0	67.0	82.0	60.0	65.0	50.0	65.0
C125	24–1/8"		67.0	82.0	60.0	65.0	50.0	65.0	67.0	82.0	60.0	65.0	50.0	65.0
CW125	28–3/8"		67.0	82.0	60.0	65.0	50.0	65.0	67.0	82.0	60.0	65.0	50.0	65.0
CX125	31–1/2"		67.0	82.0	60.0	65.0	50.0	65.0	67.0	82.0	60.0	65.0	50.0	65.0
CR13	17"	35–15/16"	67.0	82.0	60.0	65.0	50.0	65.0	67.0	82.0	60.0	65.0	50.0	65.0
CN13	20–1/2"		67.0	82.0	60.0	65.0	50.0	65.0	67.0	82.0	60.0	65.0	50.0	65.0
C13	24–1/8"		67.0	82.0	60.0	65.0	50.0	65.0	67.0	82.0	60.0	65.0	50.0	65.0
CW13	28–3/8"		67.0	82.0	60.0	65.0	50.0	65.0	67.0	82.0	60.0	65.0	50.0	65.0
CX13	31–1/2"		67.0	82.0	60.0	65.0	50.0	65.0	67.0	82.0	60.0	65.0	50.0	65.0
CXW13	35–15/16"		67.0	82.0	60.0	65.0	50.0	65.0	67.0	82.0	60.0	65.0	50.0	65.0
CR135	17"	40–13/16"	67.0	82.0	60.0	65.0	50.0	65.0	67.0	82.0	60.0	65.0	50.0	65.0
CN135	20–1/2"		67.0	82.0	60.0	65.0	50.0	65.0	67.0	82.0	60.0	65.0	50.0	65.0
C135	24–1/8"		67.0	82.0	60.0	65.0	50.0	65.0	67.0	82.0	60.0	65.0	50.0	65.0
CW135	28–3/8"		67.0	82.0	60.0	65.0	50.0	65.0	67.0	82.0	60.0	65.0	50.0	65.0
CX135	31–1/2"		67.0	82.0	60.0	65.0	50.0	65.0	67.0	82.0	60.0	65.0	50.0	65.0
CXW135	35–15/16"		67.0	82.0	60.0	65.0	50.0	65.0	67.0	82.0	60.0	65.0	50.0	65.0
CR14	17"	48"	67.0	82.0	60.0	65.0	50.0	65.0	67.0	82.0	60.0	65.0	50.0	65.0
CN14	20–1/2"		67.0	82.0	60.0	65.0	50.0	65.0	67.0	82.0	60.0	65.0	50.0	65.0
C14	24–1/8"		67.0	82.0	60.0	65.0	50.0	65.0	67.0	82.0	60.0	65.0	50.0	65.0
CW14	28–3/8"		67.0	82.0	60.0	65.0	50.0	65.0	67.0	82.0	60.0	65.0	50.0	65.0
CX14	31–1/2"		64.0	68.0	60.0	65.0	50.0	65.0	67.0	71.0	60.0	65.0	50.0	65.0
CXW14	35–15/16"		60.0	65.0	60.0	65.0	50.0	65.0	67.0	71.0	60.0	65.0	50.0	65.0
CR145	17"	52–13/16"	67.0	82.0	60.0	65.0	50.0	65.0	67.0	82.0	60.0	65.0	50.0	65.0
CN145	20–1/2"		67.0	82.0	60.0	65.0	50.0	65.0	67.0	82.0	60.0	65.0	50.0	65.0
C145	24–1/8"		67.0	82.0	60.0	65.0	50.0	65.0	67.0	82.0	60.0	65.0	50.0	65.0
CW145	28–3/8"		67.0	82.0	60.0	65.0	50.0	65.0	67.0	82.0	60.0	65.0	50.0	65.0
CX145	31–1/2"		64.0	68.0	60.0	65.0	50.0	65.0	67.0	71.0	60.0	65.0	50.0	65.0
CXW145	35–15/16"		60.0	65.0	60.0	65.0	50.0	65.0	67.0	71.0	60.0	65.0	50.0	65.0
CR15	17"	59–7/8"	67.0	82.0	60.0	65.0	50.0	65.0	67.0	82.0	60.0	65.0	50.0	65.0
CN15	20–1/2"		67.0	82.0	60.0	65.0	50.0	65.0	67.0	82.0	60.0	65.0	50.0	65.0
C15	24–1/8"		67.0	82.0	60.0	65.0	50.0	65.0	67.0	82.0	60.0	65.0	50.0	65.0
CW15	28–3/8"		64.0	68.0	60.0	65.0	50.0	65.0	67.0	71.0	60.0	65.0	50.0	65.0
CX15	31–1/2"		60.0	65.0	60.0	65.0	50.0	65.0	67.0	71.0	60.0	65.0	50.0	65.0
CR155	17"	64–13/16"	67.0	82.0	60.0	65.0	50.0	65.0	67.0	82.0	60.0	65.0	50.0	65.0
CN155	20–1/2"		67.0	82.0	60.0	65.0	50.0	65.0	67.0	82.0	60.0	65.0	50.0	65.0
C155	24–1/8"		64.0	68.0	60.0	65.0	50.0	65.0	67.0	71.0	60.0	65.0	50.0	65.0
CW155	28–3/8"		60.0	65.0	60.0	65.0	50.0	65.0	67.0	71.0	60.0	65.0	50.0	65.0
CX155	31–1/2"		50.0	65.0	–	–	50.0	65.0	57.3	71.0	–	–	50.0	65.0
CR16	17"	71–7/8"	67.0	82.0	60.0	65.0	50.0	65.0	67.0	82.0	60.0	65.0	50.0	65.0
CN16	20–1/2"		67.0	82.0	60.0	65.0	50.0	65.0	67.0	82.0	60.0	65.0	50.0	65.0
C16	24–1/8"		60.0	65.0	60.0	65.0	50.0	65.0	67.0	71.0	60.0	65.0	50.0	65.0
CW16	28–3/8"		60.0	65.0	60.0	65.0	50.0	65.0	67.0	71.0	60.0	65.0	50.0	65.0
CX16	31–1/2"		50.0	65.0	–	–	50.0	65.0	50.1	65.1	–	–	50.0	65.0

DESIGN LOAD CAPACITY – PSF (DOUBLE UNITS)

WINDOW DESCRIPTION	UNIT WIDTH INCHES	UNIT HT. INCHES	XX, OX, XO OR OO GLASS TYPE 'A' EXT.(+)	XX, OX, XO OR OO GLASS TYPE 'A' INT.(–)	XX, OX, XO OR OO GLASS TYPE 'B' EXT.(+)	XX, OX, XO OR OO GLASS TYPE 'B' INT.(–)	XX, OX, XO OR OO GLASS TYPE 'C' EXT.(+)	XX, OX, XO OR OO GLASS TYPE 'C' INT.(–)
CR23	33–3/4"	35–15/16"	67.0	71.0	60.0	65.0	50.0	65.0
CN23	40–3/4"		67.0	71.0	60.0	65.0	50.0	65.0
C23	48"		67.0	71.0	60.0	65.0	50.0	65.0
CW23	56–1/2"		67.0	71.0	60.0	65.0	50.0	65.0
CX23	62–3/4"		67.0	71.0	60.0	65.0	50.0	65.0
CXW23	71–5/8"		67.0	71.0	60.0	65.0	50.0	65.0
CR235	33–3/4"	40–13/16"	67.0	71.0	60.0	65.0	50.0	65.0
CN235	40–3/4"		67.0	71.0	60.0	65.0	50.0	65.0
C235	48"		67.0	71.0	60.0	65.0	50.0	65.0
CW235	56–1/2"		67.0	71.0	60.0	65.0	50.0	65.0
CX235	62–3/4"		67.0	71.0	60.0	65.0	50.0	65.0
CXW235	71–5/8"		67.0	71.0	60.0	65.0	50.0	65.0
CR24	33–3/4"	48"	67.0	71.0	60.0	65.0	50.0	65.0
CN24	40–3/4"		67.0	71.0	60.0	65.0	50.0	65.0
C24	48"		67.0	71.0	60.0	65.0	50.0	65.0
CW24	56–1/2"		67.0	71.0	60.0	65.0	50.0	65.0
CX24	62–3/4"		60.0	64.0	60.0	64.0	50.0	64.0
CXW24	71–5/8"		55.0	58.0	55.0	58.0	50.0	58.0
CR245	33–3/4"	52–13/16"	67.0	71.0	60.0	65.0	50.0	65.0
CN245	40–3/4"		67.0	71.0	60.0	65.0	50.0	65.0
C245	48"		67.0	71.0	60.0	65.0	50.0	65.0
CW245	56–1/2"		67.0	71.0	60.0	65.0	50.0	65.0
CX245	62–3/4"		60.0	64.0	60.0	64.0	50.0	64.0
CXW245	71–5/8"		50.0	52.0	50.0	52.0	50.0	52.0
CR25	33–3/4"	59–7/8"	60.0	64.0	60.0	64.0	50.0	64.0
CN25	40–3/4"		60.0	64.0	60.0	64.0	50.0	64.0
C25	48"		60.0	64.0	60.0	64.0	50.0	64.0
CW25	56–1/2"		60.0	63.3	60.0	63.3	50.0	63.3
CR255	33–3/4"	64–13/16"	55.0	58.0	55.0	58.0	50.0	58.0
CN255	40–3/4"		55.0	58.0	55.0	58.0	50.0	58.0
C255	48"		55.0	58.0	55.0	58.0	50.0	58.0
CW255	56–1/2"		50.0	52.0	50.0	52.0	50.0	52.0
CR26	33–3/4"	71–7/8"	55.0	58.0	55.0	58.0	50.0	58.0
CN26	40–3/4"		55.0	58.0	55.0	58.0	50.0	58.0
C26	48"		51.7	51.7	51.7	51.7	50.0	51.7
CW26	56–1/2"		43.9	43.9	43.9	43.9	43.9	43.9

DESIGN LOAD CAPACITY – PSF (TRIPLE UNITS)

WINDOW DESCRIPTION	UNIT WIDTH INCHES	UNIT HT. INCHES	XOX, OOX, XOO, OOO OR XXX GLASS TYPE 'A' EXT.(+)	XOX, OOX, XOO, OOO OR XXX GLASS TYPE 'A' INT.(–)	XOX, OOX, XOO, OOO OR XXX GLASS TYPE 'B' EXT.(+)	XOX, OOX, XOO, OOO OR XXX GLASS TYPE 'B' INT.(–)	XOX, OOX, XOO, OOO OR XXX GLASS TYPE 'C' EXT.(+)	XOX, OOX, XOO, OOO OR XXX GLASS TYPE 'C' INT.(–)
C33	71–7/8"	35–15/16"	67.0	71.0	60.0	65.0	50.0	65.0
C335	71–7/8"	40–13/16"	67.0	71.0	60.0	65.0	50.0	65.0
C34	71–7/8"	48"	60.0	64.0	60.0	64.0	50.0	64.0
C345	71–7/8"	52–13/16"	60.0	64.0	60.0	64.0	50.0	64.0
C35	71–7/8"	59–7/8"	60.0	63.7	60.0	63.7	50.0	63.7

NOTE:
GLASS CAPACITIES ON THIS SHEET ARE BASED ON ASTM E1300–02 (3 SEC. GUSTS).

Engr: DR. HUMAYOUN FAROOQ
STRUCTURES
FLA. PE # 16557
C.A.N. 3538

MAR 1 8 2007

PRODUCT REVISED
as complying with the Florida Building Code
Acceptance No. 07-0820.02
Expiration Date SEPT. 19, 2012
By Manuel Perez
Miami Dade Product Control Division

AL-FAROOQ CORPORATION
ENGINEERS & PRODUCT DEVELOPMENT
1235 S.W. 87 AVE
MIAMI, FLORIDA 33174
TEL. (305) 264-8100 FAX. (305) 262-6978

COMP–ANL\W01–46AC

'PERMA-SHIELD' VINYL CLAD WD. CASEMENT WDW. (L.M.I.)

ANDERSEN CORPORATION
100 FOURTH AVE. NORTH
BAYPORT, MN. 55003–1096
TEL. (800) 426–7691 FAX (–)

revisions: no	date	by	description
A	08.09.02		REV. PER BCCO COMMENTS
B	08.20.03		SIZES CXW14 & CXW145 ADDED
C	10.29.04		SINGLE UNITS CHART REV.
D	02.06.07		UPDATED FOR 2004 FBC

date: 07–23–01
scale: 1/2" = 1"
dr. by: HAMID
chk. by:

drawing no. W01–46

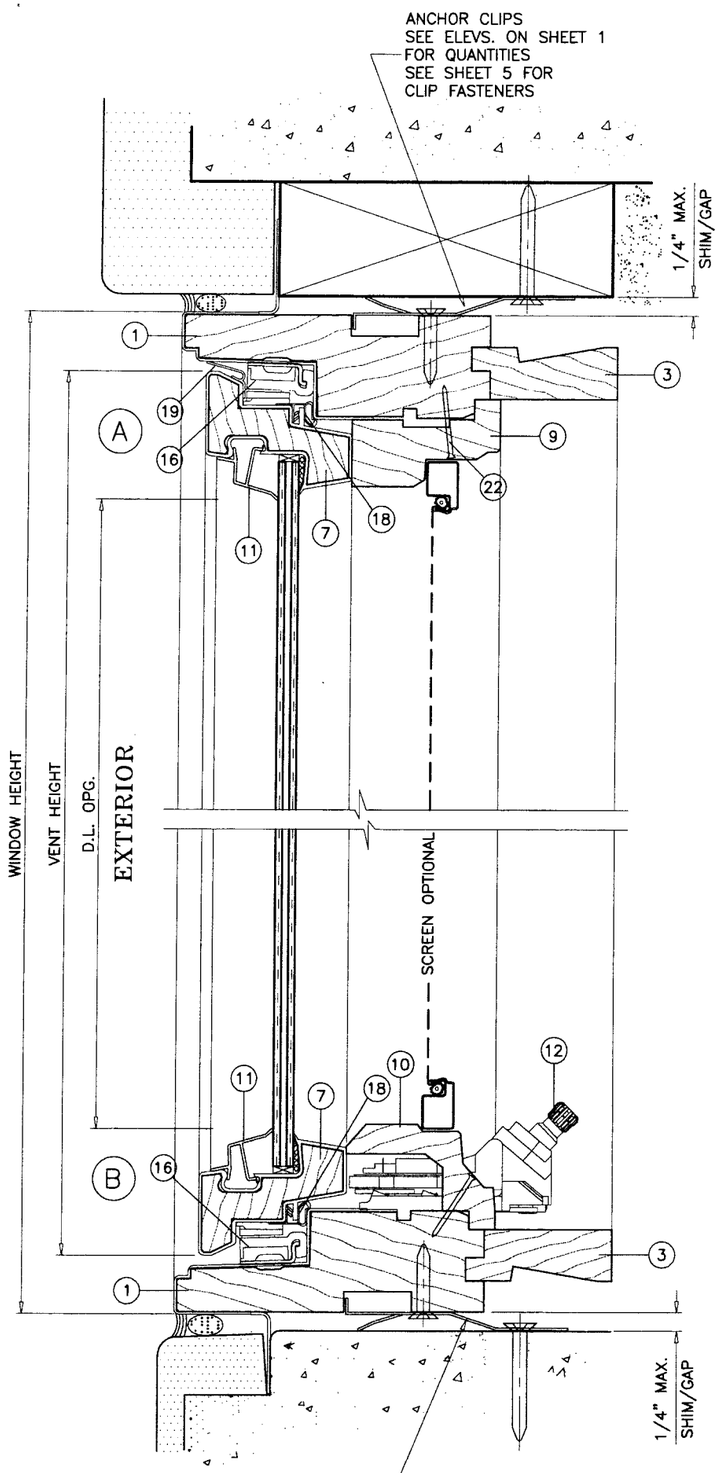

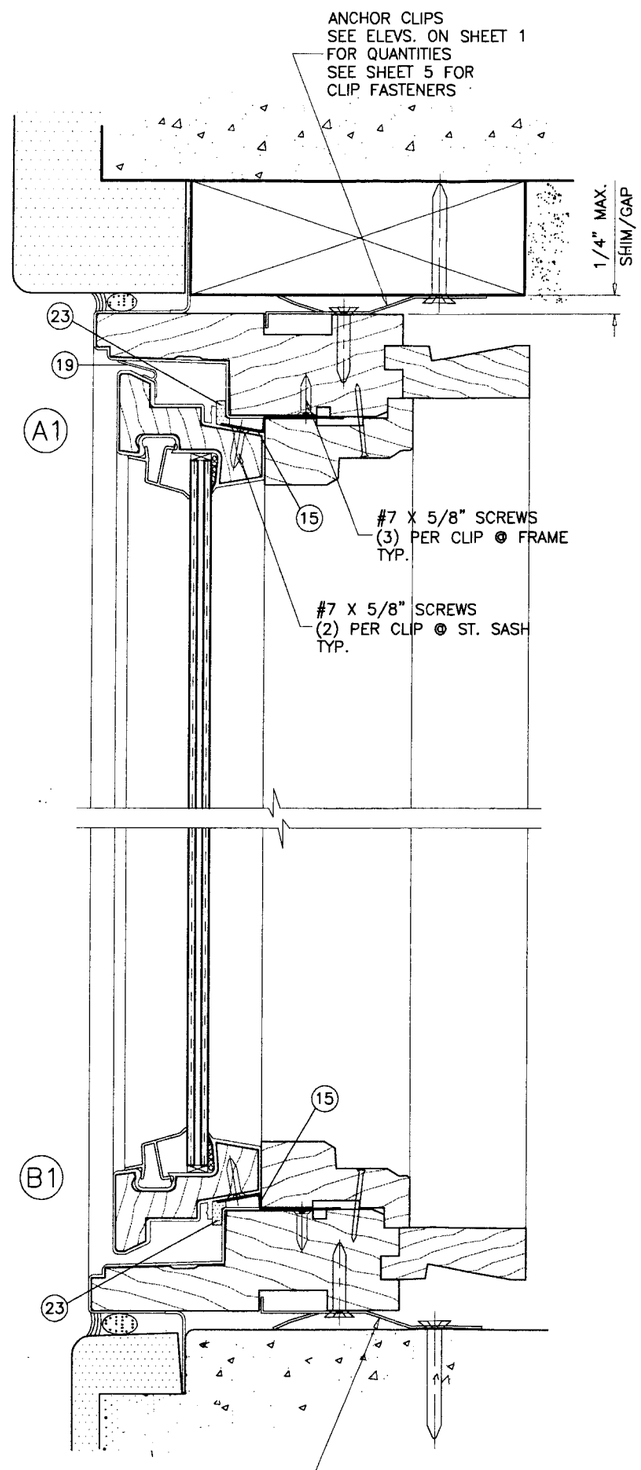

WOOD BUCKS NOT BY ANDERSEN, MUST SUSTAIN LOADS IMPOSED BY GLAZING SYSTEM AND TRANSFER THEM TO THE BUILDING STRUCTURE.

TYPICAL ANCHORS

ANCHORS THRU INSTALLATION CLIPS

A: #8 SMS

INTO 2BY WOOD BUCKS OR WOOD STRUCTURE
1-1/2" MIN. PENETRATION INTO WOOD

B: 1/4" DIA. TAPCONS

INTO 2BY WOOD BUCKS OR WOOD STRUCTURE
1-1/2" MIN. PENETRATION INTO WOOD

THRU WOOD BUCKS INTO MASONRY OR DIRECTLY INTO MASONRY
1-1/4" MIN. EMBED INTO CONC. OR MASONRY

TYPICAL EDGE DISTANCE

INTO CONCRETE AND MASONRY = 1-1/2" MIN.
INTO WOOD STRUCTURE = 3/4" MIN. (UNLESS SPECIFIED)

ANCHORS CL TO CL DISTANCE

INTO CONCRETE AND MASONRY = 3" MIN.
INTO WOOD STRUCTURE = 3/4" MIN. (UNLESS SPECIFIED)

LOCKING OPTIONS:

SURFACE MOUNTED LOCK WITH KEEPERS ON SASH BY AMEROCK CORP.

(1) POINT LOCK FOR WINDOWS UPTO 28-3/8" HEIGHTS.
(2) POINT LOCK FOR WINDOWS UPTO 40-13/16" HEIGHTS.
(3) POINT LOCK FOR ALL BIGGER HEIGHTS.

Engr: DR. HUMAYOUN FAROOQ
STRUCTURES
FLA. PE # 16557
C.A.N. 3538

MAR 1 2 2007

PRODUCT REVISED
as complying with the Florida
Building Code
Acceptance No. 07-0820.07
Expiration Date SEPT. 19, 2012
By Manuel Perez
Miami-Dade Product Control
Division

AL-FAROOQ CORPORATION
ENGINEERS & PRODUCT DEVELOPMENT
1235 S.W. 87 AVE
MIAMI, FLORIDA 33174
TEL. (305) 264-8100 FAX. (305) 262-6978

COMP-ANL\W01-46AC

'PERMA-SHIELD' VINYL CLAD WD. CASEMENT WDW. (L.M.I.)

ANDERSEN CORPORATION
100 FOURTH AVE. NORTH
BAYPORT, MN. 55003-1096
TEL. (800) 426-7691 FAX (-)

revisions:

no	date	by	description
A	08.09.02		REV. PER BCCO COMMENTS
B	08.20.03		NO CHANGE THIS SHEET
C	10.29.04		NO CHANGE THIS SHEET
D	02.06.07		UPDATED FOR 2004 FBC

date: 07-23-01
scale: 1/2" = 1"
dr. by: HAMID
chk. by:

drawing no.
W01-46

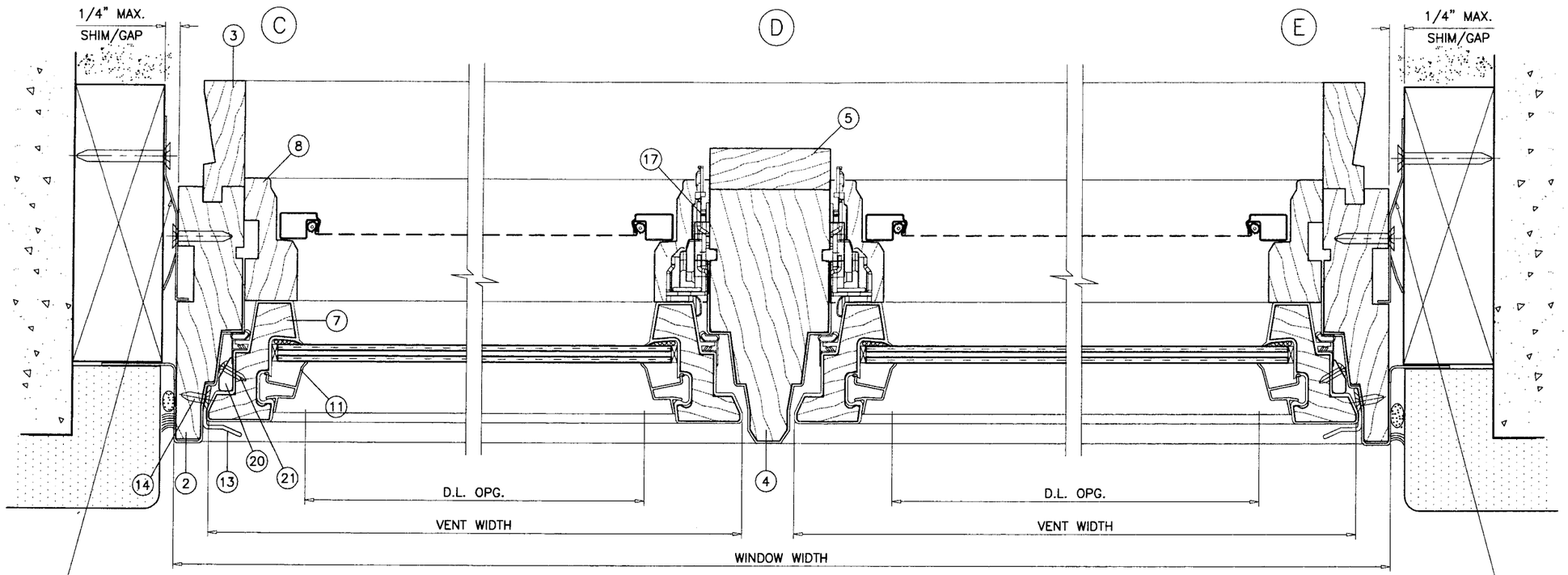

EXTERIOR

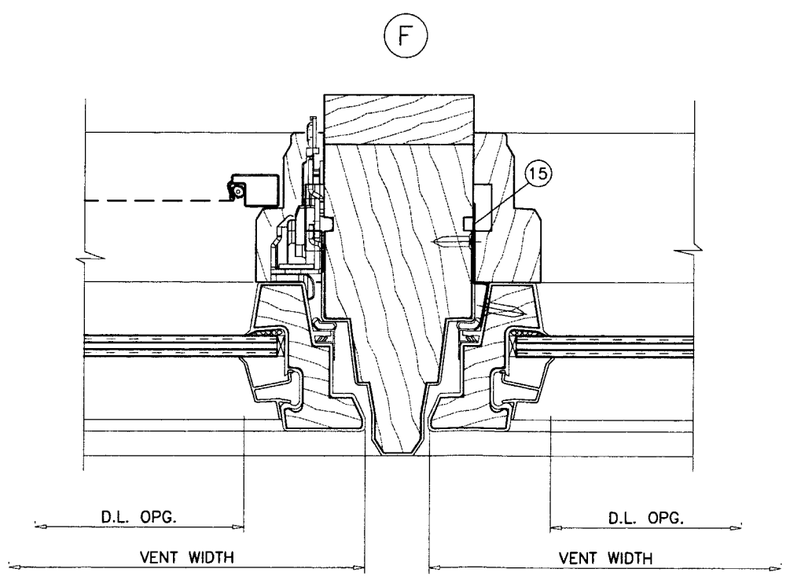

Engr: DR. HUMAYOUN FAROOQ
STRUCTURES
FLA. PE # 16557
C.A.N. 3538

MAR 1 2 2007

PRODUCT REVISED
as complying with the Florida
Building Code
Acceptance No. 07-0820.02
Expiration Date SEPT. 12, 2012
By Manuel Perez
Miami-Dade Product Control
Division

AL-FAROOQ CORPORATION
ENGINEERS & PRODUCT DEVELOPMENT
1235 S.W. 87 AVE
MIAMI, FLORIDA 33174
TEL. (305) 264-8100 FAX. (305) 262-6978

COMP-ANL\W01-46AC

'PERMA-SHIELD' VINYL CLAD WD. CASEMENT WDW. (L.M.I.)

ANDERSEN CORPORATION
100 FOURTH AVE. NORTH
BAYPORT, MN. 55003-1096
TEL. (800) 426-7691 FAX (-)

revisions:

no	date	by	description
A	08.09.02		REV. PER BCCO COMMENTS
B	08.20.03		WDW. HT. 48" WAS 52-13/16"
C	10.29.04		NO CHANGE THIS SHEET
D	02.06.07		UPDATED FOR 2004 FBC

date: 07-23-01
scale: 1/2" = 1"
dr. by: HAMID
chk. by:

drawing no.
W01-46

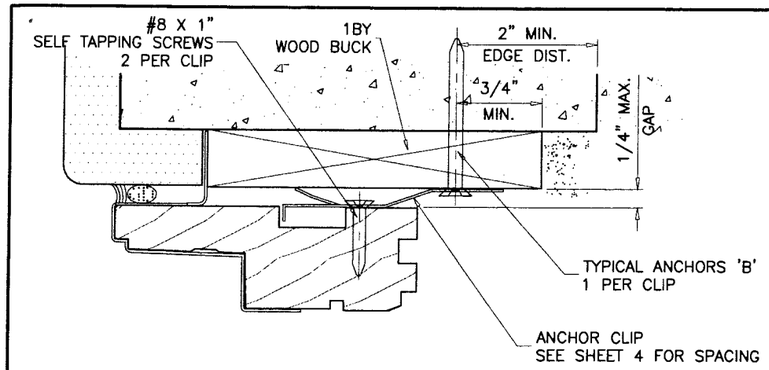

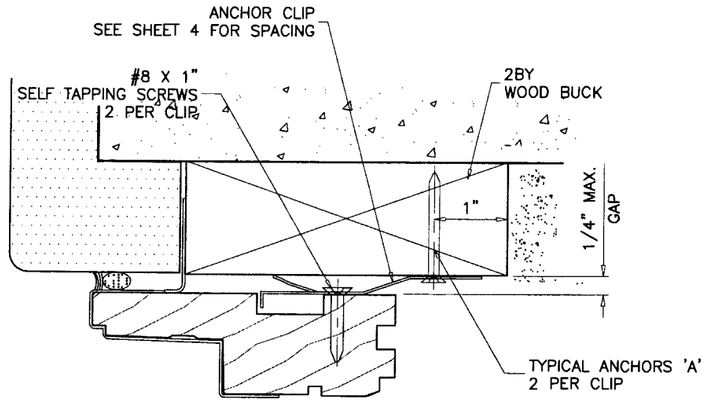

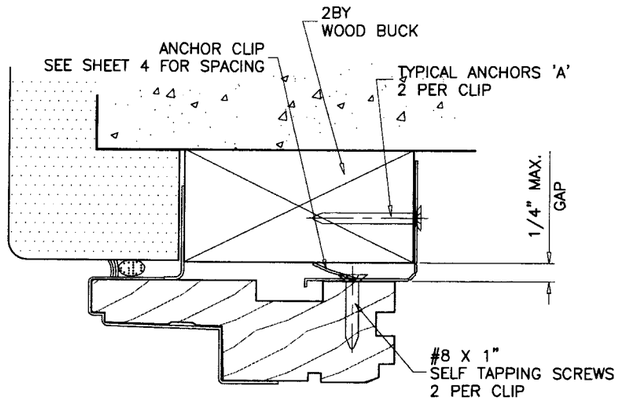

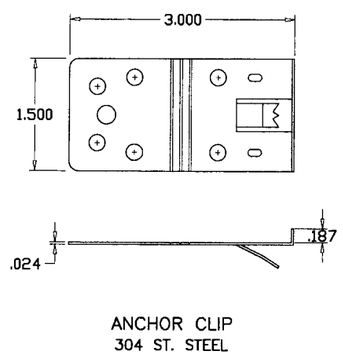

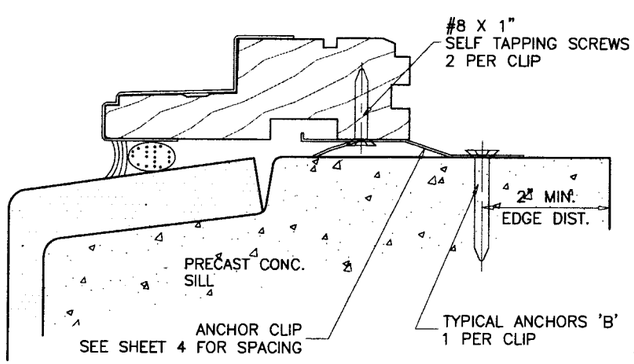

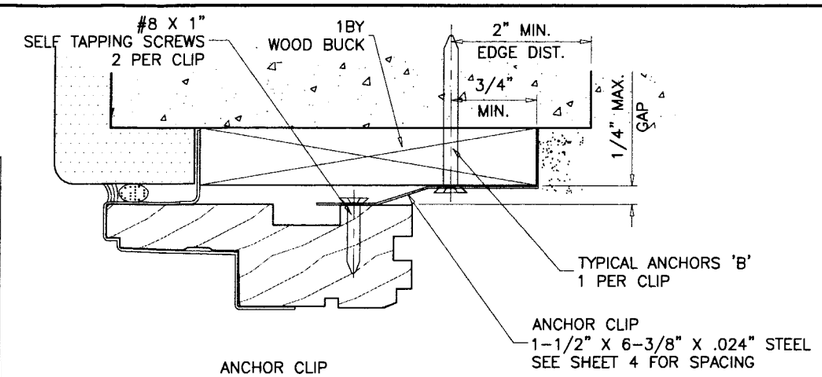

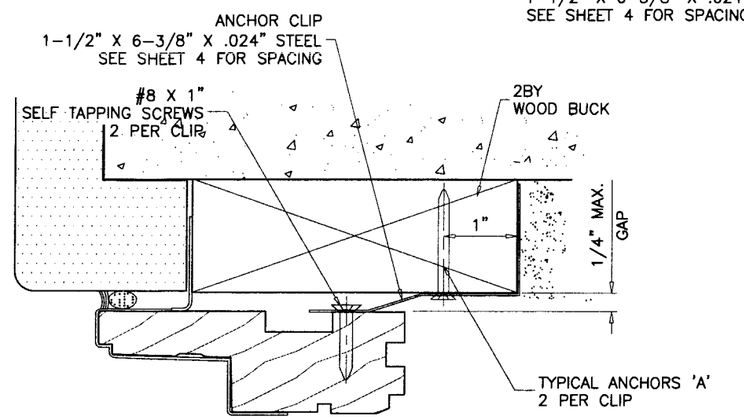

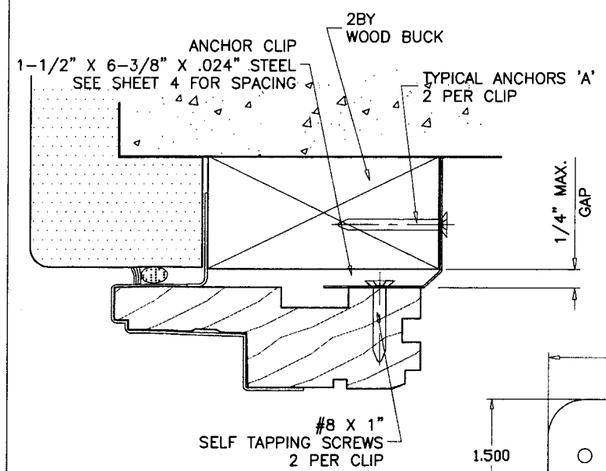

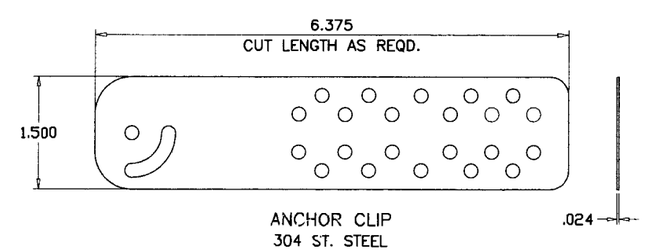

Engr: DR. HUMAYOUN FAROOQ
STRUCTURES
FLA. PE # 16557
C.A.N. 3538

WAR 1 2 2007

PRODUCT REVISED
is complying with the Florida
Building Code
Acceptance No. 07-0820.02
Expiration Date SEPT. 19, 2012
By Manuel Perez
Miami Dade Product Control
Division

CLIP INSTALLATION DETAILS

AL-FAROOQ CORPORATION
ENGINEERS & PRODUCT DEVELOPMENT
1235 S.W. 87 AVE
MIAMI, FLORIDA 33174
TEL. (305) 264-8100 FAX. (305) 262-6978
COMP-ANL\W01-46AC

'PERMA-SHIELD' VINYL CLAD WD. CASEMENT WDW. (L.M.I.)

ANDERSEN CORPORATION
100 FOURTH AVE. NORTH
BAYPORT, MN. 55003-1096
TEL. (800) 426-7691 FAX (-)

revisions:

no	date	by	description
A	08.09.02		REV. PER BCCO COMMENTS
B	08.20.03		WDW. HT. 48" WAS 52-13/16"
C	10.29.04		NO CHANGE THIS SHEET
D	02.06.07		UPDATED FOR 2004 FBC

date: 07-23-01
scale: 1/2" = 1"
dr. by: HAMID
chk. by:

drawing no.
W01-46

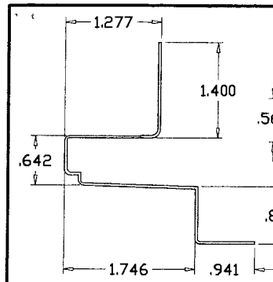

VINYL CLADDING

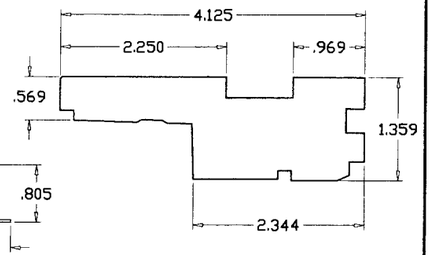

FRAME HEAD/SILL

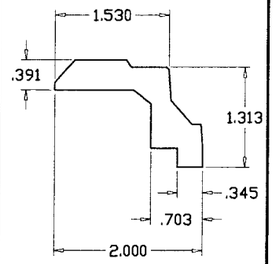

VENT STOP SILL

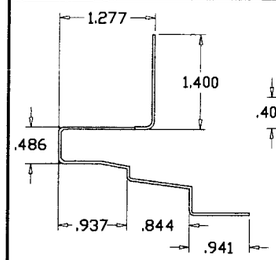

VINYL CLADDING

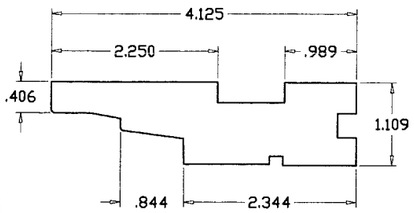

FRAME JAMB

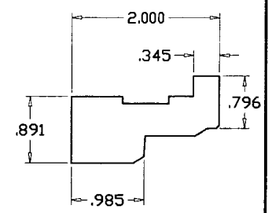

VENT STOP HEAD

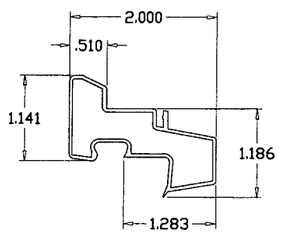

VINYL CLADDING

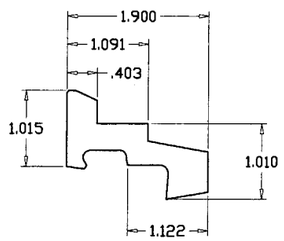

VENT RAIL/STILE

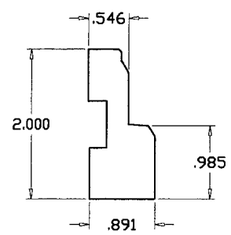

VENT STOP JAMB

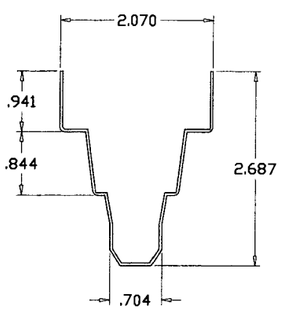

VINYL CLADDING

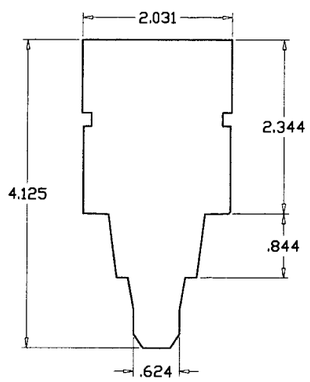

CENTER POST

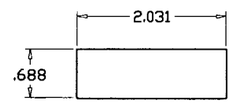

CENTER POST CASING

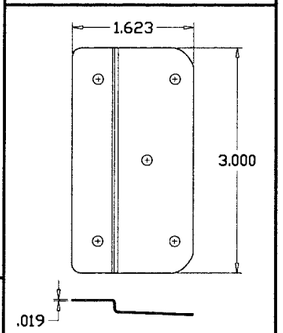

STATIONARY SASH CLIP

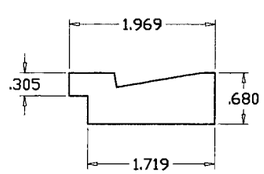

EXTENSION JAMB (HEAD/JAMB/SILL)

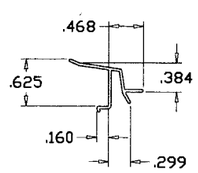

GLAZING BEAD

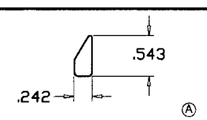

SASH REINFORCING BAR

ITEM #	NUMBER	QUANTITY	DESCRIPTION	MATERIAL	MANF./SUPPLIER/REMARKS
1	30835	AS REQD.	FRAME HEAD/SILL	WOOD	ANDERSEN
2	30838	AS REQD.	FRAME JAMB	WOOD	ANDERSEN
3	–	OPTIONAL	EXTENSION JAMBS	WOOD	ANDERSEN
4	30839	1	POST MULLION	WOOD	ANDERSEN
5	30056	1	CASING MULLION	–	–
6	–	–	–	–	–
7	30013	4/ SASH	SASH RAIL/STILE	WOOD	ANDERSEN
8	–	2/ WDW.	TRIM STOP JAMB	WOOD	ANDERSEN
9	30846/48	1/ WDW.	TRIM STOP HEAD	WOOD	ANDERSEN
10	30843/45	1/ WDW.	TRIM STOP SILL	WOOD	ANDERSEN
11	30184	AS REQD.	GLAZING BEAD	PVC	–
12	30810/12	1/ SASH	ROTO OPERATOR	STEEL	AMEROCK CORP.
13	30442	1/ SASH	SNUGGER	ALUMINUM	–
14	#8 X 1/2"	–	SNUGGER SCREWS	–	AT 1–1/2" FROM ENDS & 12" O.C.
15	30053	–	STATIONARY SASH CLIP	GALV. STEEL	–
16	1361409	2/ SASH	HINGE ASEMBLY AT TOP & BOTTOM OF SASH	STEEL	AMEROCK CORP.
17	–	AS REQD.	LOCK W/ KEEPERS ON SASH	STEEL	AMEROCK CORP.
18	30213	AS REQD.	WEATHERSTRIP STILE	–	–
19	30021	AS REQD.	WATERBAR WEATHERSTRIP	–	–
20	30871	1/ SASH	SASH REINFORCING BAR	ALUMINUM	FOR 64–13/16" & 71–7/8" WDW. HEIGHTS ONLY
21	#8 X 5/8"	–	REINFORCING BAR SCREWS	–	AT 11" O.C. MAX.
22	–	AS REQD.	BRAD NAILS 1–1/2" LONG	GALV. STEEL	–
23	30172	–	FOAM WEATHERSTRIPPING	–	–

ALL WOOD TO BE PONDEROSA PINE OR EQUAL

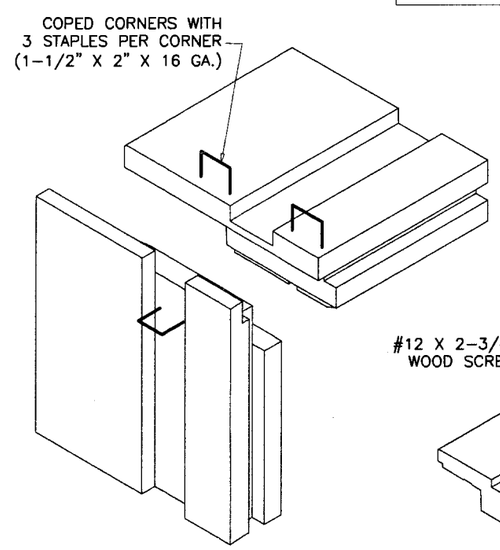

FRAME CORNERS

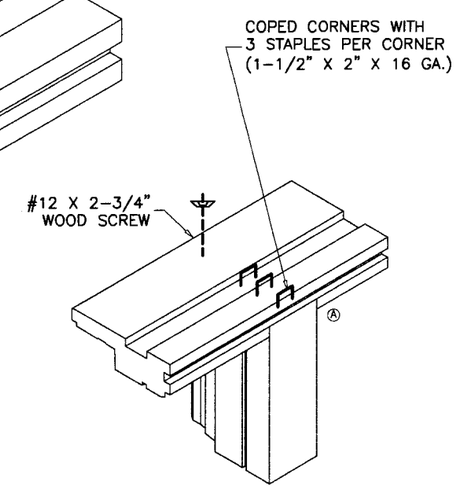

CENTER POST CORNER

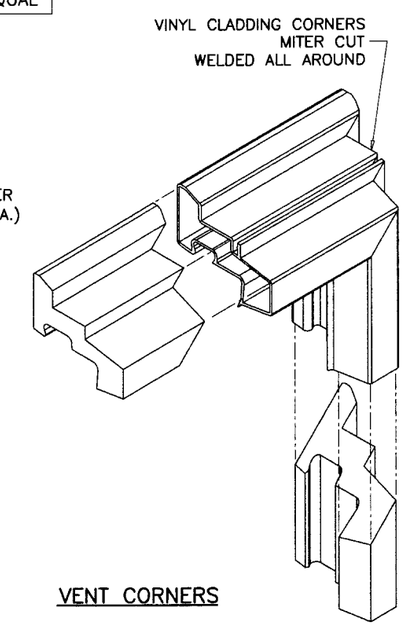

VENT CORNERS

Engr: DR. HUMAYOUN FAROOQ
STRUCTURES
FLA. PE # 16557
C.A.N. 3538

MAR 1 2 2007

PRODUCT REVISED
as complying with the Florida
Building Code
Acceptance No. 07-0820.02
Expiration Date SEPT. 13, 2012
By Manuel Perez
Miami-Dade Product Control
Division

AL-FAROOQ CORPORATION
ENGINEERS & PRODUCT DEVELOPMENT
1235 S.W. 87 AVE
MIAMI, FLORIDA 33174
TEL. (305) 264-8100 FAX. (305) 262-6978

COMP–ANL\W01–46AC

'PERMA-SHIELD' VINYL CLAD WD. CASEMENT WDW. (L.M.I.)

ANDERSEN CORPORATION
100 FOURTH AVE. NORTH
BAYPORT, MN. 55003–1096
TEL. (800) 426–7691 FAX (–)

revisions:

no	date	by	description
A	08.09.02		REV. PER BCCO COMMENTS
B	08.20.03		NO CHANGE THIS SHEET
C	10.29.04		ALT. ANCHOR CLIP ADDED
D	02.06.07		UPDATED FOR 2004 FBC

date: 07–23–01
scale: 1/2" = 1"
dr. by: HAMID
chk. by:

drawing no.
W01–46

sheet 6 of 6