MIAMI-DADE COUNTY, FLORIDA
METRO-DADE FLAGLER BUILDING
140 WEST FLAGLER STREET, SUITE 1603
MIAMI, FLORIDA 33130-1563
(305) 375-2901 FAX (305) 372-6339

BUILDING CODE COMPLIANCE OFFICE (BCCO)
PRODUCT CONTROL DIVISION

NOTICE OF ACCEPTANCE (NOA)

www.miamidade.gov/buildingcode

Jeld-Wen, Inc. (OR)
3737 Lakeport Boulevard
Klamath Falls, OR 97601

SCOPE:

This NOA is being issued under the applicable rules and regulations governing the use of construction materials. The documentation submitted has been reviewed by Miami-Dade County Product Control Division and accepted by the Board of Rules and Appeals (BORA) to be used in Miami Dade County and other areas where allowed by the Authority Having Jurisdiction (AHJ).

This NOA shall not be valid after the expiration date stated below. The Miami-Dade County Product Control Division (In Miami Dade County) and/or the AHJ (in areas other than Miami Dade County) reserve the right to have this product or material tested for quality assurance purposes. If this product or material fails to perform in the accepted manner, the manufacturer will incur the expense of such testing and the AHJ may immediately revoke, modify, or suspend the use of such product or material within their jurisdiction. BORA reserves the right to revoke this acceptance, if it is determined by Miami-Dade County Product Control Division that this product or material fails to meet the requirements of the applicable building code.

This product is approved as described herein, and has been designed to comply with the Florida Building Code, including the High Velocity Hurricane Zone.

DESCRIPTION: Series 6'8" S/E Outswing Opaque Steel Door w/o Sidelites – L.M.I.- w Sidelites – N.I.

APPROVAL DOCUMENT: Drawing No. **S-2127**, titled "Up to 12'-0" x 6'-8" Steel Edge Outswing Opaque Steel Impact Door W/3'-0" Non-Impact Sidelites", sheets 1 through 5 of 5, dated 12/18/2001 with revision # C dated 07/09/2007, prepared by PTC, LLC, dated 08/09/2007, signed and sealed by Eric S. Nielsen, P.E., bearing the Miami-Dade County Product Control Revision stamp with the Notice of Acceptance number and expiration date by the Miami-Dade County Product Control Division.

MISSILE IMPACT RATING: Large and Small Missile Impact Resistant

LIMITATION: Sidelites Are Requiring Miami–Dade County Approved Impact Resistant Shutters.

LABELING: Each unit shall bear a permanent label with the manufacturer's name or logo, city, state and following statement: "Miami-Dade County Product Control Approved", unless otherwise noted herein.

RENEWAL of this NOA shall be considered after a renewal application has been filed and there has been no change in the applicable building code negatively affecting the performance of this product.

TERMINATION of this NOA will occur after the expiration date or if there has been a revision or change in the materials, use, and/or manufacture of the product or process. Misuse of this NOA as an endorsement of any product, for sales, advertising or any other purposes shall automatically terminate this NOA. Failure to comply with any section of this NOA shall be cause for termination and removal of NOA.

ADVERTISEMENT: The NOA number preceded by the words Miami-Dade County, Florida, and followed by the expiration date may be displayed in advertising literature. If any portion of the NOA is displayed, then it shall be done in its entirety.

INSPECTION: A copy of this entire NOA shall be provided to the user by the manufacturer or its distributors and shall be available for inspection at the job site at the request of the Building Official.

This NOA **revises and renews NOA # 02-0111.02** and consists of this page 1 and evidence pages E-1 and E-2, as well as approval document mentioned above.

The submitted documentation was reviewed by **Manuel Perez, P.E.**

PRODUCT CONTROL ACCEPTED

Jeld-Wen, Inc. (OR)

NOTICE OF ACCEPTANCE: EVIDENCE SUBMITTED

A. DRAWINGS

1. Manufacturer's die drawings and sections.
2. Drawing No **S-2127**, titled "Up to 12'-0" x 6'-8" Steel Edge Outswing Opaque Steel Impact Door W/3'-0" Non-Impact Sidelites", sheets 1 through 5 of 5, dated 12/18/2001 with revision # C dated 07/09/2007, prepared by PTC, LLC, dated 08/09/2007, signed and sealed by Eric S. Nielsen, P.E.

B. TESTS

1. Test reports on: 1) Air Infiltration Test, per PA 202-94
   2) Uniform Static Air Pressure Test, Loading per PA 202-94
   3) Water Resistance Test, per PA 202-94
   4) Large Missile Impact Test per PA 201-94
   5) Cyclic Wind Pressure Loading per PA 203-94
   6) Forced Entry Test, per PA 202-94

   Along with marked-up drawings and installation diagram of DoorCraft Outswing and Inswing opaque steel edge steel door, prepared by Certified Testing Laboratories, Test Report No. **CTLA-717WA**, dated 11/17/2001, signed and sealed by Ramesh C. Patel, P.E.
   (Submitted under approval No.02-0111.02)
2. Test reports on: 1) Tensile Test, per ASTM D 638-03, E8/A370 or B557 along with marked-up drawings and installation diagram, prepared by Certified Testing Laboratories, Test Report No. **CTLA-719G**, dated 06/04/2001, signed and sealed by Ramesh C. Patel, P.E.
   (Submitted under approval No.02-0111.02)
3. Test reports on: 1) Tensile Test, per ASTM D 638-03, E8/A370 or B557 along with marked-up drawings and installation diagram, prepared by Certified Testing Laboratories, Test Report No. **CTLA-1484G**, dated 11/29/2001, signed and sealed by Ramesh C. Patel, P.E.
   (Submitted under approval No.02-0111.02)

C. CALCULATIONS

1. Anchor verification calculations and structural analysis, complying with FBC-2004, dated 07/27/2007, prepared by PTC, LLC, dated 08/09/2007, signed and sealed by Eric S. Nielsen, P.E.
   Complies with ASTM E1300 - 02

D. QUALITY ASSURANCE

1. Miami Dade Building Code Compliance Office (BCCO).

Manuel Perez, P.E.
Product Control Examiner
NOA No. 07-0820.08
Expiration Date: August 22, 2012
Approval Date: January 03, 2008

NOTICE OF ACCEPTANCE: EVIDENCE SUBMITTED

E. MATERIAL CERTIFICATIONS

1. Notice of Acceptance No. **07-0828.01** issued to Trinity Glass International. for "Component Approvals - Plastics - N.I." dated 09/27/2007, expiring on 07/03/2012.
2. Notice of Acceptance No. **07-0801.05** issued to ODL, Inc. for "ODL "HP Polypropylene" High Performance Door Lite Material-Component Approval" dated 09/27/2007, expiring on 01/17/2011.

F. STATEMENTS

1. Statement letter of conformance, no financial interest and compliance, dated 08/09/2007, prepared by PTC, LLC, signed and sealed by Eric S. Nielsen, P.E.
2. Statement letter of addendum, dated April 01, 2002 by Certified Testing Laboratories, Test Report No. **CTLA-717WA**, dated 04/10/2002, signed and sealed by Ramesh C. Patel, P.E.

G. OTHER

1. Notice of Acceptance No. **02-0111.02**, issued to Jeld-Wen, Inc. for their Series "Steel Edge Opaque Double Door W/3'-0" Non-Impact Sidelites Up to 151" x 6'-8" Outswing Unit", approved on 08/22/2002 and expiring on 08/22/2007.

Manuel Perez, P.E.
Product Control Examiner
NOA No. 07-0820.08
Expiration Date: August 22, 2012
Approval Date: January 03, 2008

JELD-WEN® Steel

6'-8" STEEL EDGE OUTSWING OPAQUE STEEL IMPACT DOOR
W/ 3'-0" NON-IMPACT SIDELITES

PRODUCT REVISED
as complying with the Florida Building Code
Acceptance No 07-0820.08
Expiration Date 08/22/2012
By Miami-Dade Product Control Division

GENERAL NOTES

1. THIS PRODUCT IS DESIGNED TO COMPLY WITH THE 2004 FLORIDA BUILDING CODES (W/ 2005 & 2006 SUPPLEMENTS) AND "HIGH VELOCITY HURRICANE ZONE" (HVHZ) REQUIREMENTS.
2. WOOD BUCKS BY OTHERS, MUST BE ANCHORED PROPERLY TO TRANSFER LOADS TO THE STRUCTURE.
3. PRODUCT ANCHORS SHALL BE AS LISTED AND SPACED PER ANCHOR LOCATION DRAWINGS. ANCHOR EMBEDMENT TO BASE MATERIAL SHALL BE BEYOND WALL DRESSING OR STUCCO.
4. SEE TABLE 1 ON THIS SHEET FOR DESIGN PRESSURE RATING.
5. THIS PRODUCT MEETS THE WATER REQUIREMENTS FOR MIAMI-DADE COUNTY.
6. MIAMI-DADE APPROVED IMPACT RESISTANT SHUTTERS ARE REQUIRED AT SIDELITES ONLY.

RESIDENTIAL INSULATED STEEL DOOR

(Common to all frame conditions)

Door Leaf Construction:

Face sheets: 24 ga. (0.020") minimum thickness, Galvanized steel A-525 commercial quality - AKDQ per ASTM 620 with yield strength Fy(ave.)=26,755 psi.

Core design: Expanded polystyrene with 1.0 to 1.25 lbs./c.f. density, by Jeld-Wen, Inc.

Panel Construction: The active and inactive door panels are constructed from (2) 24 ga. (0.020") thick galvanized steel skins with roll formed edges to receive the 1.73" wide x 1.219" thick roll formed glavanized steel side stiles/top rail. The tops of the steel panels are bent at a ninety-degree angle to overlap the 0.25" top rail and side stiles. The bottom rail is 0.021" roll formed steel 1.67" wide x 1.21" high formed to receive door bottom sweeps when required. The steel bottom is butted to the side stiles. The side stiles have a tab, which is bent 90° over the bottom rail and secured with a 0.25" X 0.5" 16ga. rivet at each corner. The bottoms of the steel panels are bent at a ninety-degree angle to overlap the bottom rail 0.25". Each hinge location on the hinge stile is internally reinforced with a 1.131" wide x 1.213" deep x 12.404" long piece of pressed fiberboard, (MDF board). The interior cavity of each door is filled with polystyrene. The face sheet is glued to the polystyrene.

Sash Construction: The sash is constructed from (2) 24GA. (0.020" min.) galvanized steel. The edges of the face sheet are bent 90° over the polystyrene core and and glued to it. The sashes are routed to receive the ODL (Spartech Polycom PP5530 C13) lite frame. The units are glazed with 0.125" tempered glass. The lite frames are sealed with QSD glazing compound on the exterior.

Frame Construction: The frames are constructed from Ponderosa Pine jambs measuring 1.25" wide x 4.5625" deep. The head jambs are mortised and butt joined to the side jambs and attached with (3) 16GA. 2" x 7/16" crown wire staples. The units use a bump face threshold measuring 4.041" x 1.0" or an aluminum bump high dam threshold measuring 5.25" wide x 1.75" high. The threshold is attached to the frame with (3) 16GA. 2" x 7/16" crown wire staples.

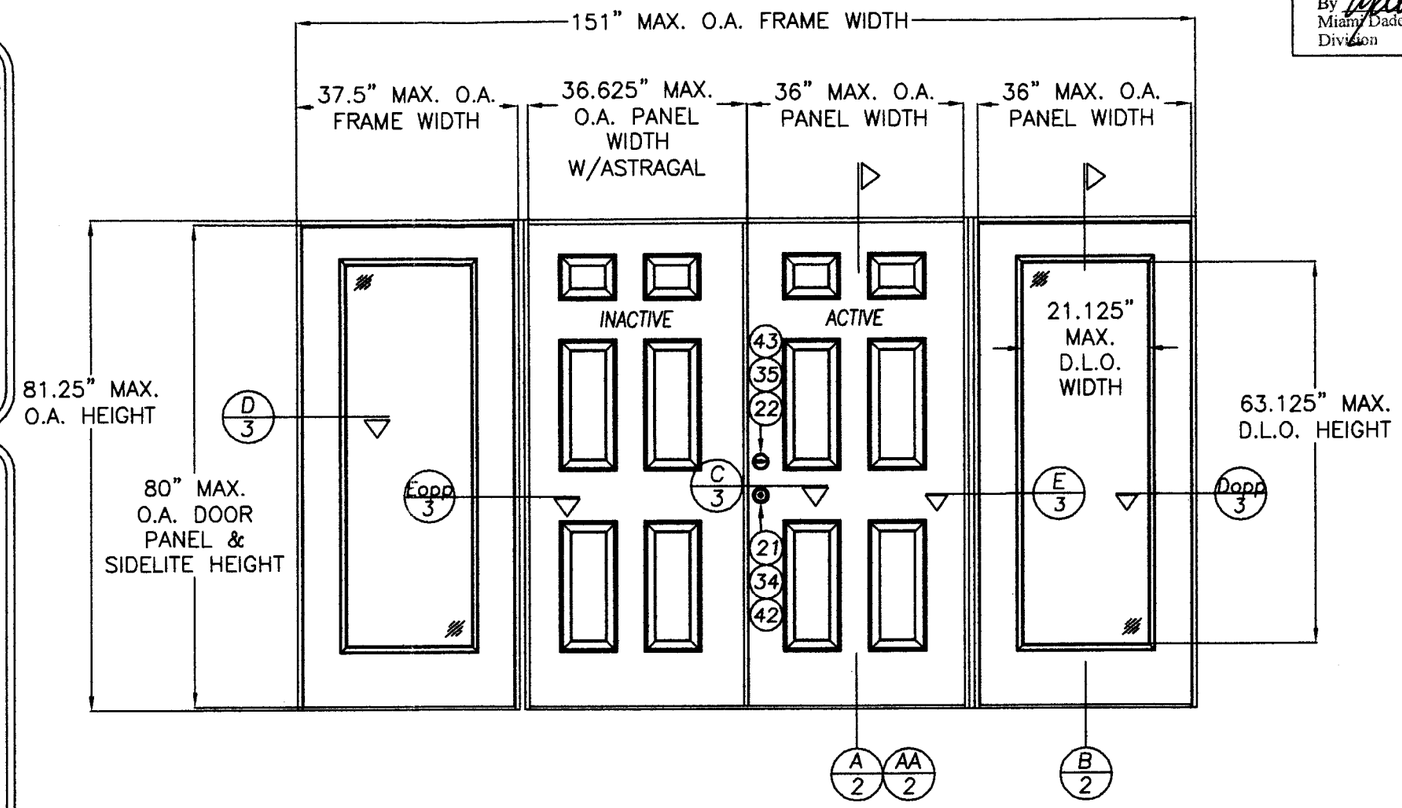

DOUBLE IMPACT OUTSWING DOOR SYSTEM WITH NON-IMPACT SIDELITES (OXXO)
VIEWED FROM INTERIOR

TABLE 1

DESIGN PRESSURE RATING WHERE WATER INFILTRATION REQUIREMENT IS NEEDED		
UNIT TYPE	WITH HIGH DAM THRESHOLD	WITH PEMKO LOW PROFILE THRESHOLD
DOUBLE W/SIDELITES	+60.0 psf -60.0 psf	+57.0 psf -57.0 psf

TABLE OF CONTENTS

SHEET #	DESCRIPTION
1	GENERAL NOTES & TYPICAL ELEVATION
2	VERTICAL SECTIONS & BILL OF MATERIALS
3	HORIZONTAL SECTIONS, NOTES & GLAZING DETAIL
4	ANCHORING LOCATIONS & DETAILS
5	UNIT COMPONENTS

Eric S. Nielson
Florida P. E. No. 41323
8/9/07
PTC, LLC
1535 Cogswell Street, Suite C25
Rockledge, Florida 32955
FBPE Certificate of Authorization NO. 25935

PREPARED BY:

PTC, LLC
Phone 321.690.1788
Fax 321.690.1789

JELD-WEN, INC.
3737 LAKEPORT BLVD.
KLAMATH FALLS, OR. 97601
PH. 541.882.3451

PRODUCT: UP TO 12'-0" X 6'-8" STEEL EDGE OUTSWING OPAQUE STEEL IMPACT DOOR W/3'-0" NON-IMPACT SIDELITES

PART OR ASSEMBLY: GENERAL NOTES & TYPICAL ELEVATION

#	DATE	REVISIONS	BY
C	07/09/07	GENERAL REVISION	JWJ
B	06/07/02	GENERAL REVISION	WLN
A	03/06/02	GENERAL REVISION	TJH

DATE: 07/09/07
SCALE: NTS
DWG. BY: JWJ
CHK. BY: S. Saffell
DRAWING NO.: S-2127
SHEET 1 OF 5

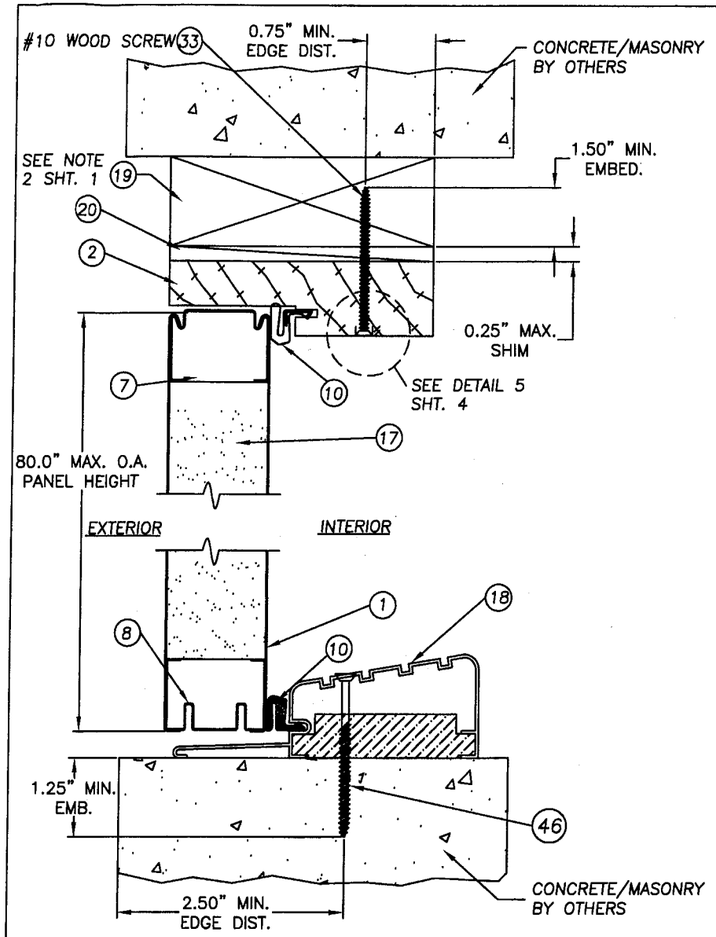

A/2 VERTICAL SECTION
DOOR PANEL W/HIGH DAM THRESHOLD

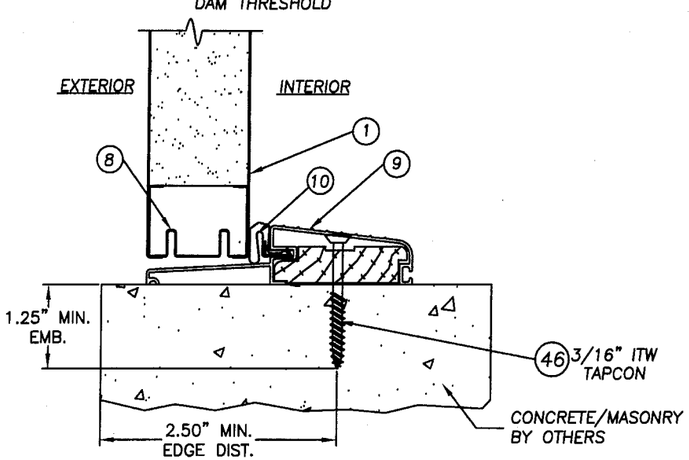

AA/2 VERTICAL SECTION
IMPACT DOOR PANEL W/LOW PROFILE THRESHOLD

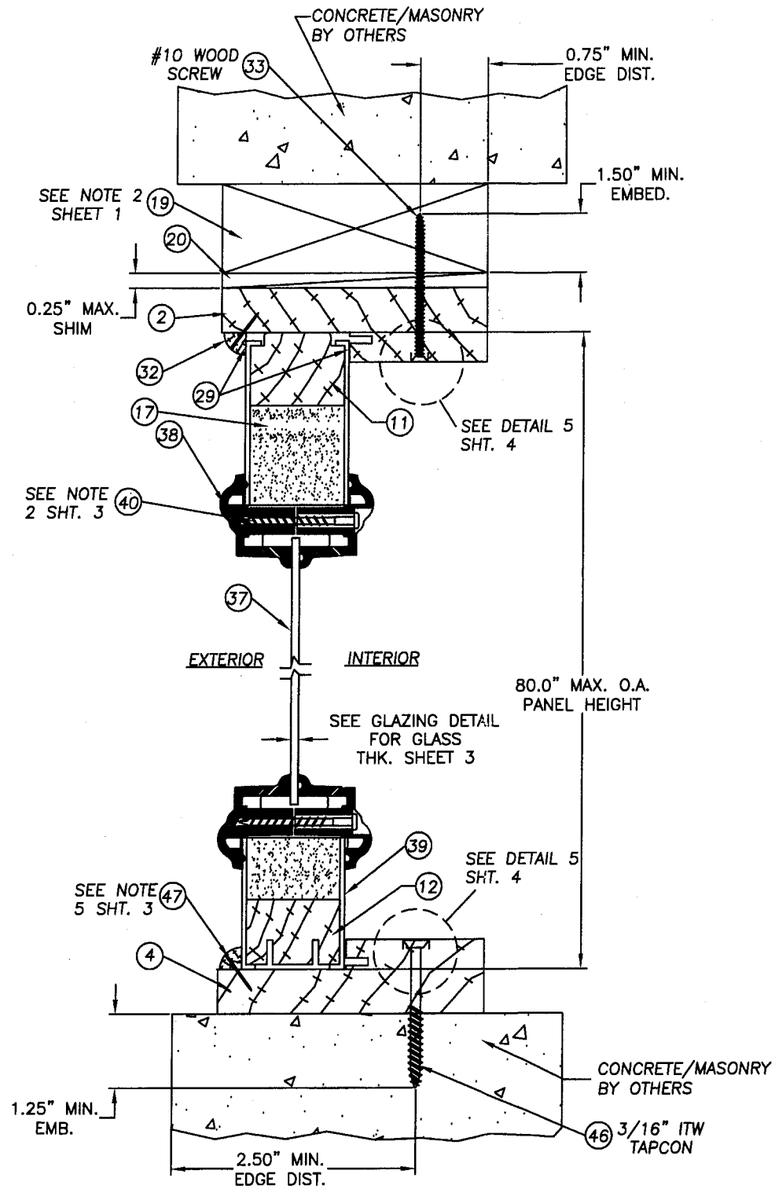

B/2 VERTICAL SECTION
NON-IMPACT SIDELITE SASH (SHUTTERS REQUIRED AT SIDELITE)

PRODUCT REVISED
as complying with the Florida Building Code
Acceptance No 07-0820.08
Expiration Date 08/22/2012
By Miami-Dade Product Control Division

ITEM	DESCRIPTION	MATERIAL
1	DOOR, STEEL EDGE 1.75" THK. 24GA. (.020" MIN.)	STEEL
2	HEAD JAMB (PONDEROSA FINGER JOINTED PINE)	WOOD
3	HINGE JAMB (PONDEROSA FINGER JOINTED PINE)	WOOD
4	SIDELITE JAMB (PONDEROSA FINGER JOINTED PINE)	WOOD
5	4" x 4" BUTT HINGE 12ga.	STEEL
6	#9 X 1" PFH WOOD SCREW (HINGE TO DOOR)	STEEL
7	DOOR PANEL TOP RAIL	STEEL
8	DOOR PANEL BOTTOM RAIL (THK. MIN. 24GA.)	STEEL
9	OUTSWING BUMPER THRESHOLD (BY PEMKO)	ALUM.
10	COMPRESSION WEATHERSTRIP (SCHLEGEL Q-LON QDS 650)	FOAM
11	SIDELITE PANEL TOP RAIL	WOOD
12	SIDELITE PANEL BOTTOM RAIL	WOOD
13	SIDELITE PANEL SIDE STILE	WOOD
14	#10 x 1 1/2" PFH WOOD SCREW	STEEL
15	LOCK BLOCK	WOOD
16	DOOR PANEL SIDE STILE	STEEL
17	EXPANDED POLYSTYRENE (1.0 to 1.25 lb./c.f. DENSITY) BY JELD-WEN	FOAM
18	HIGH DAM BUMP THRESHOLD BY IMPERIAL .051" ALUM.	ALUM.
19	2x SUB BUCK	WOOD
20	SHIM (0.25" MAX. THK. HIGH DENSITY PLASTIC OR GREATER)	–
21	KWIKSET 400 SERIES KNOB	–
22	KWIKSET TITAN 700 SERIES DEADBOLT	–
23	1/4" x 1 3/8" MULLION CAP	WOOD
24	#8 x 2" PHILL. FLATHEAD WOOD SCREW	STEEL
25	# 8 x 2 1/2" PHILL. FLATHEAD WOOD SCREW	STEEL
27	16GA. BRAD TRIM NAIL 1" L.	STEEL
28	1.131" x 1.131" x 12.4" MDF BOARD	–
29	SILICONE CAULK (CR LAWRENCE 33C)	SILICONE
30	GLAZING COMPOUND (QSD BY ODL)	SILICONE
32	3/8" QUARTER ROUND SIDELITE STOP	WOOD
33	#10 WOOD INSTALLATION SCREW W/ 1.50" MIN. EMBED.	STEEL
34	SCHLAGE KNOB SET #F51	–
35	SCHLAGE DEADBOLT #B360	–
37	1/8" TEMPERED GLASS (BY PPG)	GLASS
38	LITE FRAME 1/8" GLASS (ODL SPARTECH POLYCOM PP5530 C13)	POLYPROP.
39	STEEL SIDELITE PANEL 24GA. (.020" MIN. STEEL)	STEEL
40	#8 x 1 1/2" PLASCREW (LITE FRAME)	STEEL
41	EXTRUDED ALUMINUM ASTRAGAL BY IMPERIAL	ALUM.
42	YALE KNOB HERITAGE SERIES	–
43	YALE DEADBOLT HERITAGE SERIES	–
44	#10 x 1" PHILLIPS FLATHEAD WOOD SCREW	STEEL
45	#8 x 2" PHILLIPS FLATHEAD WOOD SCREW	STEEL
46	3/16" ITW TAPCON W/ 1.25" MIN. EMBED.	STEEL
47	16GA. BRAD TRIM NAIL 3/4" L.	STEEL
48	3/4" THK. x 4 9/16" DEEP PRESSURE TREATED REINFORCEMENT	WOOD

JELD-WEN, INC.
3737 LAKEPORT BLVD.
KLAMATH FALLS, OR. 97601
PH. 541.882.3451

PRODUCT: UP TO 12'-0" X 6'-8" STEEL EDGE OUTSWING OPAQUE STEEL IMPACT DOOR W/ 3'-0" NON-IMPACT SIDELITES

PART OR ASSEMBLY: VERTICAL SECTIONS & BILL OF MATERIALS

#	DATE	REVISIONS	BY
C	07/09/07	GENERAL REVISON	JWJ
B	06/07/02	GENERAL REVISON	WLN
A	03/06/02	GENERAL REVISON	T.H

Eric S. Nielsen
Florida P. E. No. 41323
8/9/07
PTC, LLC
1535 Cogswell Street, Suite C25
Rockledge, Florida 32955
FBPE Certificate of Authorization NO. 25935

PREPARED BY:
PTC
PTC, LLC
Phone 321.690.1788
Fax 321.690.1789

DATE: 07/09/07
SCALE: NTS
DWG. BY: JWJ
CHK. BY: S. Saffell
DRAWING NO.: S-2127
SHEET 2 OF 5

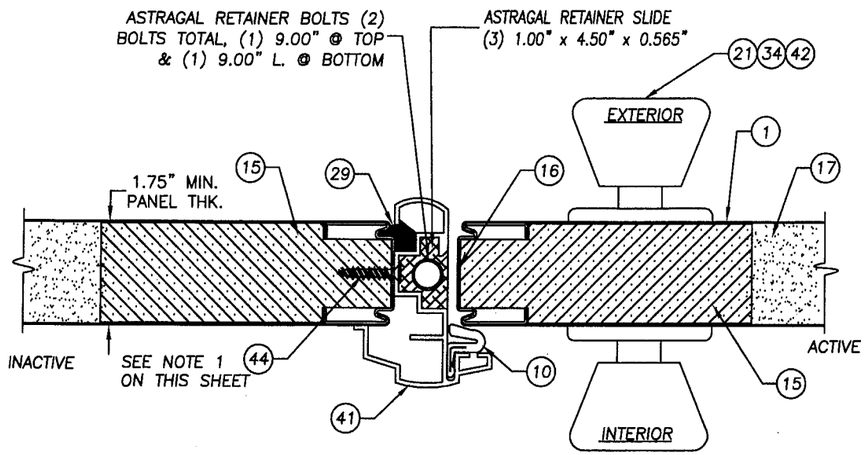

C/3 HORIZONTAL SECTION AT ASTRAGAL (IMPERIAL ASTRAGAL)

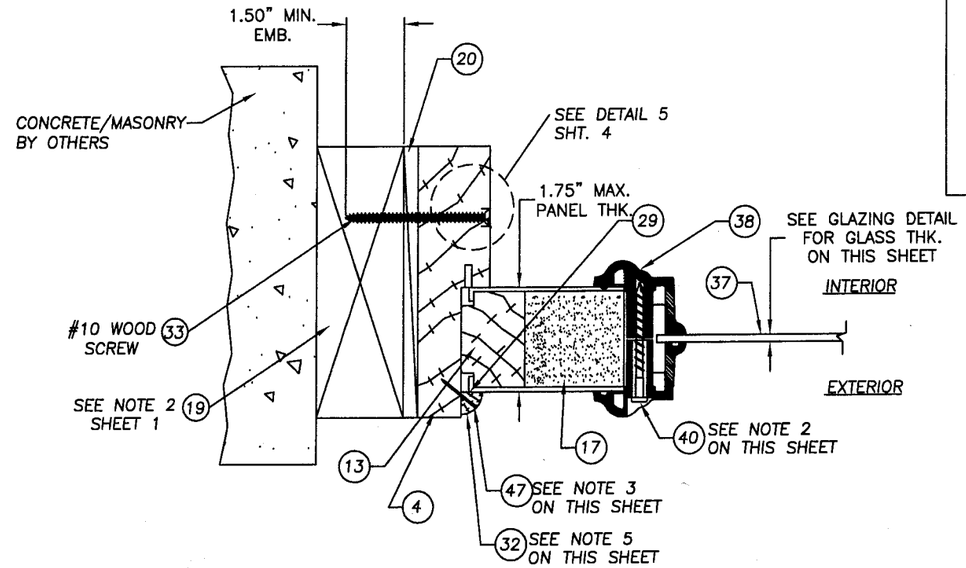

D/3 HORIZONTAL SECTION NON-IMPACT SIDELITE TO BUCK (TYP.) (SHUTTERS REQUIRED AT SIDELITE)

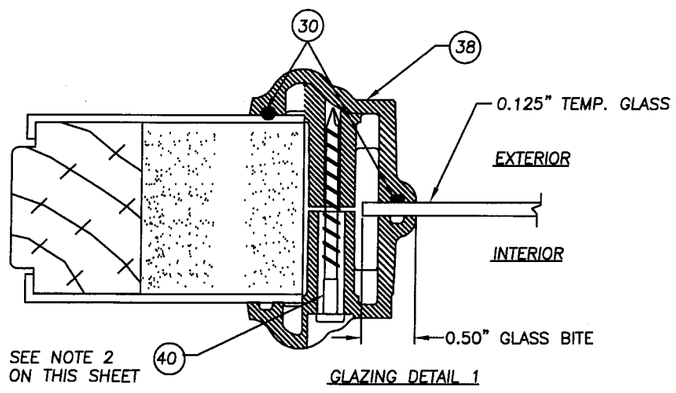

GLAZING DETAIL 1

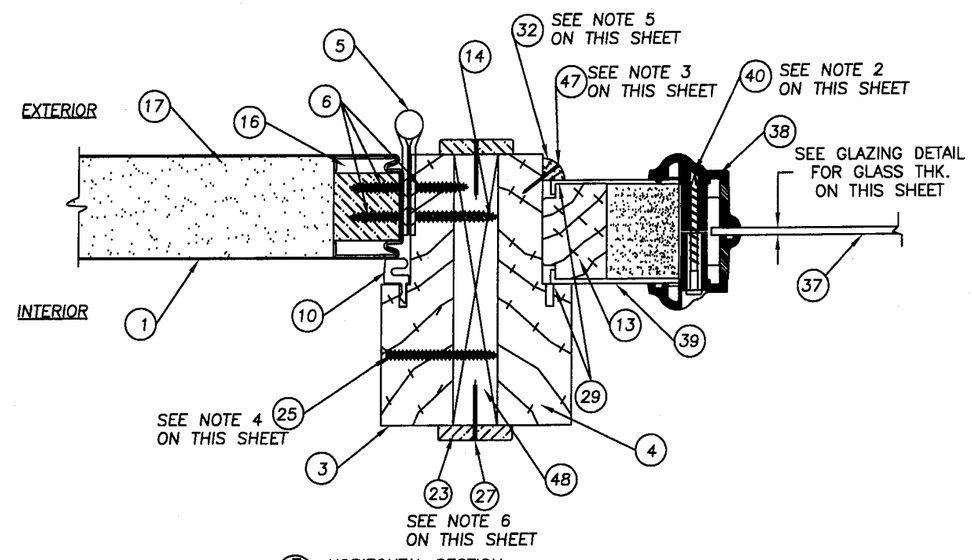

E/3 HORIZONTAL SECTION NON-IMPACT SIDELITE TO HINGE JAMB. (TYP.) (SHUTTERS REQUIRED AT SIDELITE)

NOTES:

1. SPACING FOR ITEM #44, THE #10 x 1" PFH SCREW ATTACHING THE IMPERIAL ASTRAGAL TO THE INACTIVE DOOR IS AS FOLLOWS: FROM THE TOP DOWN & BOTTOM UP; 1.0", 2.5", 4.0", 5.5", 13.0", 18.0" & 26.0".
2. SPACING FOR ITEM #40, THE #8 x 1 1/2" PLASCREW IS AS FOLLOWS; TOP & BOTTOM; (2) SCREWS 3.0" IN FROM EACH HORIZONTAL CORNER. FROM THE TOP OF THE FRAME DOWN ON THE SIDES; 3.0", 13.0", 26.0", 39.0", 52.0" & 63.0".
3. SPACING FOR ITEM #47, THE BRAD TRIM NAIL 3/4" L. ATTACHING THE QUARTER ROUND TO THE SIDELITE IS AS FOLLOWS; TOP & BOTTOM; 1.25" IN FROM EACH HORIZONTAL CORNER WITH (1) MORE NAIL IN THE MIDDLE. SIDES; 1.25" FROM EACH END & SIX MORE EQUALLY SPACED ON THE FIELD.
4. SPACING FOR ITEM #25, THE #8 x 2.5" PFH WOOD SCREW ATTACHING THE MULLIONS TOGETHER IS AS FOLLOWS; 6.0" FROM EACH VERTICAL CORNER WITH (4) MORE SCREWS EQUALLY SPACED, A TOTAL OF (6) SCREWS PER EACH VERTICAL MULLION.
5. THE SIDELITE IS SECURED INTO THE SIDELITE JAMB WITH SILICONE CAULK ON THREE SIDES & 3/8" QUARTER ROUND & BRAD TRIM NAIL x 3/4" L.
6. THE MULLION CAP IS ATTACHED TO THE PRESSURE TREATED REINFORCEMENT WITH ITEM #27 A 1" TRIM NAIL SPACED A MAX. OF 12" ON CENTER.
7. USE ITEM #33 WHEN INSTALLING INTO WOOD SUBSTRATE AT HEAD AND JAMBS. USE ITEM #46 WHEN INSTALLING INTO CONCRETE/MASONRY SUBSTRATE AT SIDELITE SILLS. USE ITEM# 25 WHEN INSTALLING INTO MULLIONS.

PRODUCT REVISED
as complying with the Florida Building Code
Acceptance No 07-0820.08
Expiration Date 08/22/2012
By Manuel Perez
Miami-Dade Product Control Division

JELD-WEN, INC.
3737 LAKEPORT BLVD.
KLAMATH FALLS, OR. 97601
PH. 541.882.3451

PRODUCT: UP TO 12'-0" X 6'-8" STEEL EDGE OUTSWING, OPAQUE STEEL IMPACT DOOR W/3'-0" NON-IMPACT SIDELITES

PART OR ASSEMBLY: HORIZONTAL SECTIONS, NOTES & GLAZING DETAIL

#	DATE	REVISIONS	BY
C	07/09/07	GENERAL REVISION	JWJ
B	06/07/02	GENERAL REVISION	WLN
A	03/06/02	GENERAL REVISION	TJH

Eric S. Nielsen
Florida P. E. No. 41323
8/9/07
PTC, LLC
1535 Cogswell Street, Suite C25
Rockledge, Florida 32955
FBPE Certificate of Authorization NO. 25935

PREPARED BY:

PTC

PTC, LLC
Phone 321.690.1788
Fax 321.690.1789

DATE: 07/09/07
SCALE: NTS
DWG. BY: JWJ
CHK. BY: S. Saffell
DRAWING NO.: S-2127
SHEET 3 OF 5

PRODUCT REVISED
as complying with the Florida Building Code
Acceptance No 07-0820.08
Expiration Date 08/22/2012
By Marvin Perez
Miami-Dade Product Control Division

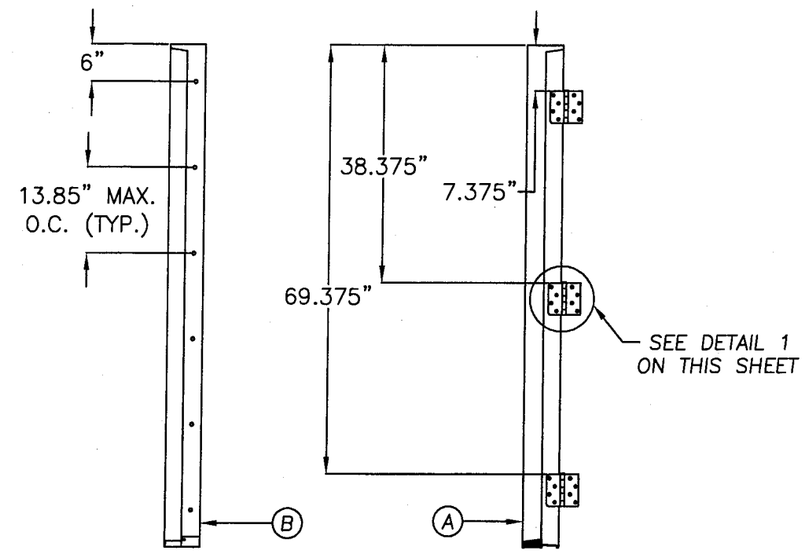

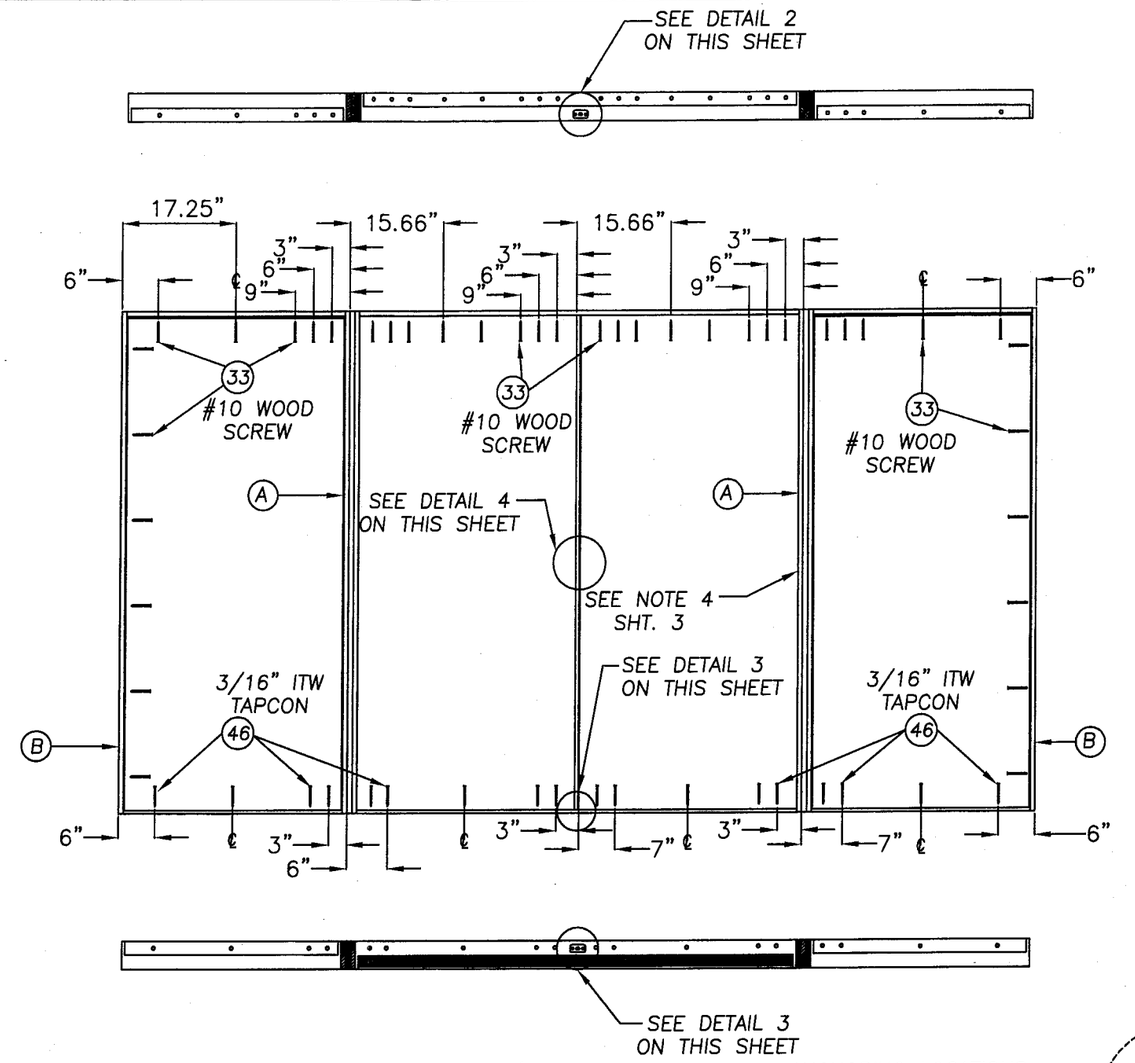

DOUBLE IMPACT OUTSWING DOOR W/ NON-IMPACT SIDELITES ANCHORING LOCATIONS
VIEWED FROM INTERIOR

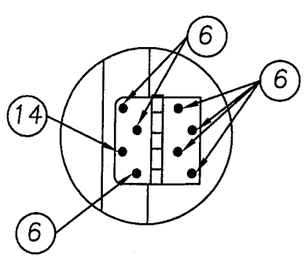

DETAIL 1

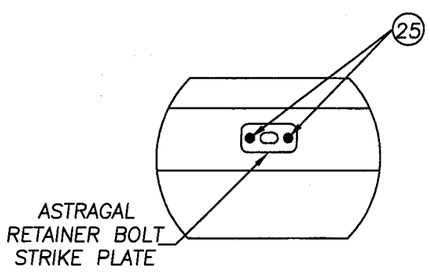

DETAIL 2 (IMPERIAL ASTRAGAL)

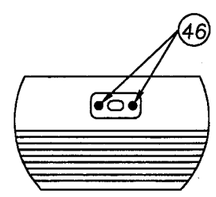

DETAIL 3 (IMPERIAL ASTRAGAL)

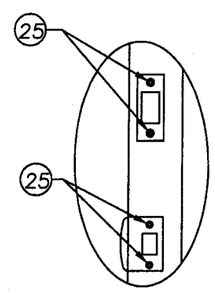

DETAIL 4
STRIKE PLATES
TO ASTRAGAL

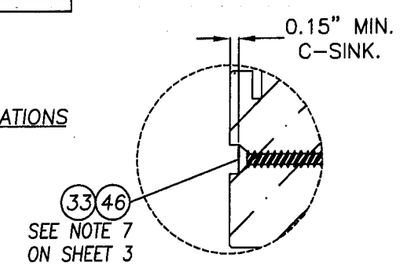

DETAIL 5
COUNTERSINK FOR INSTALLATION ANCHORS

JELD-WEN, INC.
3737 LAKEPORT BLVD.
KLAMATH FALLS, OR. 97601
PH. 541.882.3451

PRODUCT: UP TO 12'-0" x 6'-8" STEEL EDGE OUTSWING, OPAQUE STEEL IMPACT DOOR W/3'-0" NON-IMPACT SIDELITES

PART OR ASSEMBLY: ANCHORING LOCATIONS & DETAILS

#	DATE	REVISIONS	BY
C	07/09/07	GENERAL REVISION	JWJ
B	06/07/02	GENERAL REVISION	WLN
A	03/06/02	GENERAL REVISION	TJH

Eric S. Nielsen
Florida P. E. No. 41323
8/9/07
PTC, LLC
1535 Cogswell Street, Suite C25
Rockledge, Florida 32955
FBPE Certificate of Authorization
NO. 25935

PREPARED BY:
PTC
PTC, LLC
Phone 321.690.1788
Fax 321.690.1789

DATE: 7/09/07
SCALE: NTS
DWG. BY: JWJ
CHK. BY: S. Saffell
DRAWING NO.: S-2127
SHEET 4 OF 5

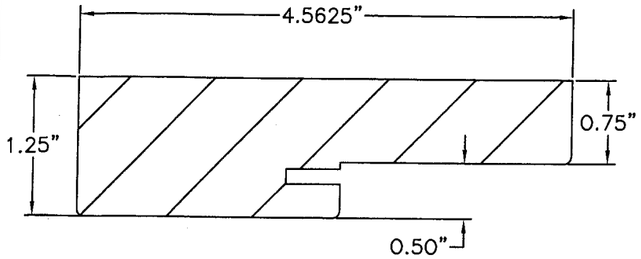

(2)(4)(3) WOOD FRAME

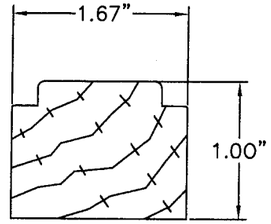

(13)(11) SIDELITE TOP & SIDE STILE

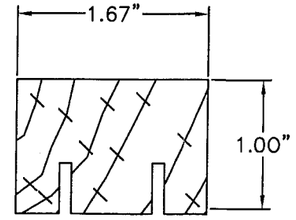

(12) SIDELITE BOTTOM RAIL WOOD

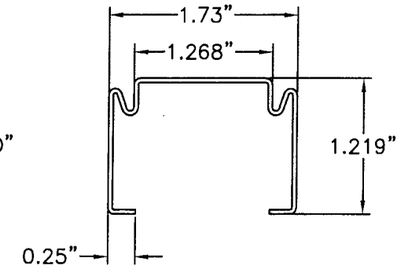

(7)(8)(16) DOOR STEEL EDGE CAP, TOP, LATCH STILE & HINGE STILE 0.021" ROLL FORMED STEEL

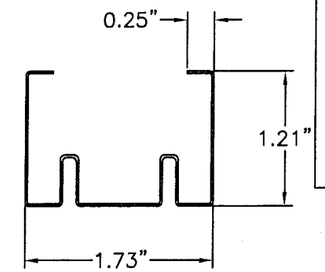

(8) DOOR STEEL EDGE CAP, BOTTOM 0.021" ROLL FORMED STEEL

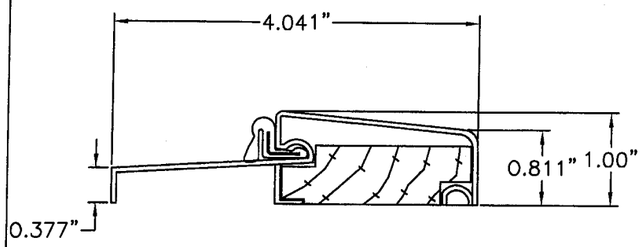

(9) OUTSWING BUMPFACE THRESHOLD LOW PROFILE 0.050" EXTRUDED ALUMINUM

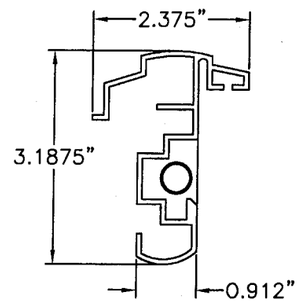

(41) ASTRAGAL IMPERIAL (HURRICANE) ASTRAGAL

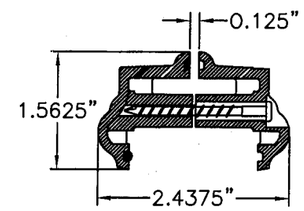

(38) LITE FRAME ODL SPARTECH POLYCOM PP5530 C13

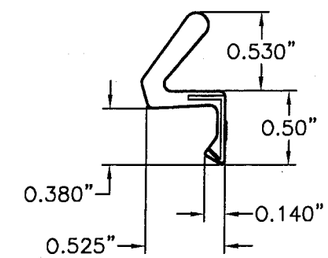

(10) COMPRESSION WEATHERSRTIP SCHLEGEL Q-LON QDS 650

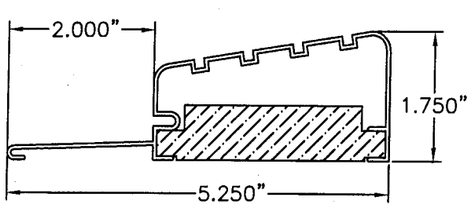

(18) OUTSWING HIGH DAM BUMP FACE ALUMINUM THRSHOLD 0.050" EXTRUDED ALUMINUM

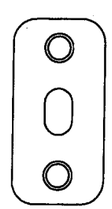

IMPERIAL ASTRAGAL STRIKE PLATE STEEL

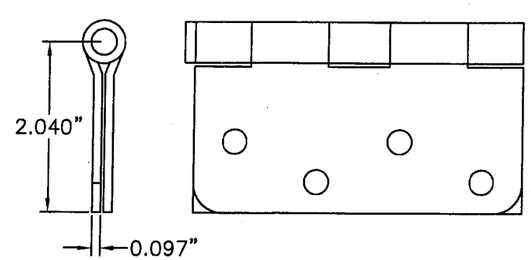

(5) 4" x 4" STEEL DOOR HINGE 0.097" THK. STEEL BY HAGER

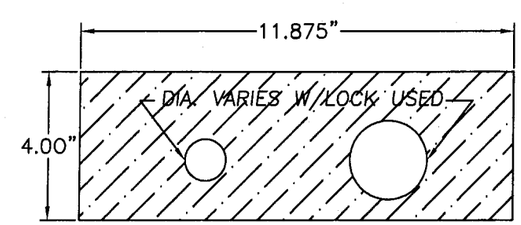

(15) WOOD LOCK BLOCK 1.71" THK.

PRODUCT REVISED
in compliance with the Florida Building Code
Approval No 07-0820.08
Expiration Date 08/22/2012
By Manuel Perez
Miami-Dade Product Control Division

JELD-WEN, INC.
3737 LAKEPORT BLVD.
KLAMATH FALLS, OR. 97601
PH. 541.882.3451

PRODUCT: UP TO 12'-0" X 6'-8" STEEL EDGE OUTSWING OPAQUE STEEL IMPACT DOOR W/3'-0" NON-IMPACT SIDELITES

PART OR ASSEMBLY: UNIT COMPONENTS

#	DATE	REVISIONS	BY
C	07/09/07	GENERAL REVISION	JWJ
B	06/07/02	GENERAL REVISION	WLN
A	03/06/02	GENERAL REVISION	TJH

Eric S. Nielsen
Florida P. E. No. 41323
8/9/07
PTC, LLC
1535 Cogswell Street, Suite C25
Rockledge, Florida 32955
FBPE Certificate of Authorization NO. 25935

PREPARED BY:
PTC
PTC, LLC
Phone 321.690.1788
Fax 321.690.1789

DATE: 07/09/07
SCALE: NTS
DWG. BY: JWJ
CHK. BY: S. Saffell
DRAWING NO.: S-2127
SHEET 5 OF 5