MIAMI-DADE COUNTY, FLORIDA
METRO-DADE FLAGLER BUILDING
140 WEST FLAGLER STREET, SUITE 1603
MIAMI, FLORIDA 33130-1563
(305) 375-2901 FAX (305) 372-6339
www.miamidade.gov/buildingcode

BUILDING CODE COMPLIANCE OFFICE (BCCO)
PRODUCT CONTROL DIVISION

NOTICE OF ACCEPTANCE (NOA)

Andersen Corporation
100 Fourth Avenue North
Bayport, MN 55003

SCOPE:

This NOA is being issued under the applicable rules and regulations governing the use of construction materials. The documentation submitted has been reviewed by Miami-Dade County Product Control Division and accepted by the Board of Rules and Appeals (BORA) to be used in Miami Dade County and other areas where allowed by the Authority Having Jurisdiction (AHJ).

This NOA shall not be valid after the expiration date stated below. The Miami-Dade County Product Control Division (In Miami Dade County) and/or the AHJ (in areas other than Miami Dade County) reserve the right to have this product or material tested for quality assurance purposes. If this product or material fails to perform in the accepted manner, the manufacturer will incur the expense of such testing and the AHJ may immediately revoke, modify, or suspend the use of such product or material within their jurisdiction. BORA reserves the right to revoke this acceptance, if it is determined by Miami-Dade County Product Control Division that this product or material fails to meet the requirements of the applicable building code.

This product is approved as described herein, and has been designed to comply with the Florida Building Code, including the High Velocity Hurricane Zone.

DESCRIPTION: Series "Vinyl Clad Direct Set" Wood Fixed Window – L.M.I.

APPROVAL DOCUMENT: Drawing No. **W05-36**, titled "Vinyl Clad Direct Set Fixed Wood Wdw. (L.M.I.)", sheets 1 through 14 of 14, dated 07/22/2005, with revision A dated 10/08/2007,prepared by Al-Farooq Corporation, dated 11/05/2007, signed and sealed by Humayoun Farooq, P.E., bearing the Miami-Dade County Product Control Renewal stamp with the Notice of Acceptance number and expiration date by the Miami-Dade County Product Control Division.

MISSILE IMPACT RATING: Large and Small Missile Impact Resistant

LABELING: Each unit shall bear a permanent label with the manufacturer's name or logo, city, state and following statement: "Miami-Dade County Product Control Approved", unless otherwise noted herein.

REVISION of this NOA shall be considered after a renewal application has been filed and there has been no change in the applicable building code negatively affecting the performance of this product.

TERMINATION of this NOA will occur after the expiration date or if there has been a revision or change in the materials, use, and/or manufacture of the product or process. Misuse of this NOA as an endorsement of any product, for sales, advertising or any other purposes shall automatically terminate this NOA. Failure to comply with any section of this NOA shall be cause for termination and removal of NOA.

ADVERTISEMENT: The NOA number preceded by the words Miami-Dade County, Florida, and followed by the expiration date may be displayed in advertising literature. If any portion of the NOA is displayed, then it shall be done in its entirety.

INSPECTION: A copy of this entire NOA shall be provided to the user by the manufacturer or its distributors and shall be available for inspection at the job site at the request of the Building Official.

This NOA **renews NOA # 06-0531.01** and consists of this page 1 and evidence pages E-1 and E-2, as well as approval document mentioned above.

The submitted documentation was reviewed by **Jaime D. Gascon, P.E.**

PRODUCT CONTROL ACCEPTED

J. Gascon
11/15/07

Andersen Corporation

NOTICE OF ACCEPTANCE: EVIDENCE SUBMITTED

A. DRAWINGS

1. Manufacturer's die drawings and sections.
2. Drawing No. **W05-36**, titled "Vinyl Clad Direct Set Fixed Wood Wdw. (L.M.I.)", sheets 1 through 14 of 14, dated 07/22/2005, with revision A dated 0/08/2007,prepared by Al-Farooq Corporation, dated 11/05/2007, signed and sealed by Humayoun Farooq, P.E.

B. TESTS

1. Test reports on 1) Air Infiltration Test, per FBC, TAS 202-94
   2) Uniform Static Air Pressure Test, Loading per FBC TAS 202-94
   3) Water Resistance Test, per FBC, TAS 202-94
   4) Large Missile Impact Test per FBC, TAS 201-94
   5) Cyclic Wind Pressure Loading per FBC, TAS 203-94

   along with marked-up drawings and installation diagram of vinyl clad direct set wood fixed window, prepared by Architectural Testing Inc,, Test Report No. **ATI-02-32062.01**, dated 05/05/2000, signed and sealed by Allen N. Reeves, P.E.
   (Submitted under NOA's #06-0531.01)

2. Test reports on 1) Air Infiltration Test, per FBC, TAS 202-94
   2) Uniform Static Air Pressure Test, Loading per FBC TAS 202-94
   3) Water Resistance Test, per FBC, TAS 202-94
   4) Large Missile Impact Test per FBC, TAS 201-94
   5) Cyclic Wind Pressure Loading per FBC, TAS 203-94

   along with marked-up drawings and installation diagram of vinyl clad direct set wood fixed window, prepared by Architectural Testing Inc,, Test Report No. **ATI-02-30992.01**, dated 05/05/2000, signed and sealed by Allen N. Reeves, P.E.
   (Submitted under NOA's #06-0531.01)

3. Test reports on 1) Air Infiltration Test, per FBC, TAS 202-94
   2) Uniform Static Air Pressure Test, Loading per FBC TAS 202-94
   3) Water Resistance Test, per FBC, TAS 202-94
   4) Large Missile Impact Test per FBC, TAS 201-94
   5) Cyclic Wind Pressure Loading per FBC, TAS 203-94

   along with marked-up drawings and installation diagram of vinyl clad fixed elliptical top wood window, prepared by Architectural Testing Inc,, Test Report No. **ATI-02-31053.01**, dated 02/08/1999, signed and sealed by Allen N. Reeves, P.E.
   (Submitted under NOA's #06-0531.01)

Jaime D. Gascon, P.E.
Chief, Product Control Division
NOA No 07-0820.10
Expiration Date: November 05, 2012
Approval Date: December 06, 2007

NOTICE OF ACCEPTANCE: EVIDENCE SUBMITTED

B. TESTS (Continuous)

4. Test reports on 1) Air Infiltration Test, per FBC, TAS 202-94
   2) Uniform Static Air Pressure Test, Loading per FBC TAS 202-94
   3) Water Resistance Test, per FBC, TAS 202-94
   4) Large Missile Impact Test per FBC, TAS 201-94
   5) Cyclic Wind Pressure Loading per FBC, TAS 203-94

   along with marked-up drawings and installation diagram of vinyl clad fixed circle top wood window, prepared by Architectural Testing Inc,, Test Report No. ATI-02-31052.01, dated 02/08/1999, signed and sealed by Allen N. Reeves, P.E.
   (Submitted under NOA's #06-0531.01)

C. CALCULATIONS

1. Anchor Calculations and structural analysis, complying with FBC-2004, prepared by Al-Farooq Corporation, dated March 13, 2006, signed and sealed by Humayoun Farooq, P.E.
   Complies with ASTM E1300-98/02

D. QUALITY ASSURANCE

1. Miami Dade Building Code Compliance Office (BCCO).

E. MATERIAL CERTIFICATIONS

1. Notice of Acceptance No. **06-1205.10** issued to E.I. DuPont DeNemours & Co., Inc. for their "**DuPont Sentry Glass ® Plus**" dated 02/15/07, expiring on 01/14/08.
2. Notice of Acceptance No. **03-0421.01** issued to Solutia Inc. for their "**Saflex HP a polyvinyl butryal interlayer for lamination of glass**" dated 05/22/03, expiring on 04/14/08.

F. STATEMENTS

1. Statement letter of conformance, no financial interest and compliance, dated July 5, 2006, signed and sealed by Humayoun Farooq, P.E.
   (Submitted under NOA's #06-0531.01)

G. OTHER

1. Notice of Acceptance No. **06-0531.01**, issued to Andersen Corporation for their **Series "Vinyl Clad Direct Set" Wood Fixed Window – L.M.I.**, approved on 07/27/2006 and expiring on 11/05/2007.

Jaime D. Gascon, P.E.
Chief, Product Control Division
NOA No 07-0820.10
Expiration Date: November 05, 2012
Approval Date: December 06, 2007

DESIGN LOAD CAPACITY – PSF				
WINDOW DESCRIPTION	UNIT WIDTH INCHES	UNIT HT. INCHES	LAMINATED GLASS	
			EXT.(+)	INT.(–)
CTC1	24–1/8	14–3/8	67.0	82.0
CTCW1	28–3/8	16–1/2	67.0	82.0
CTCX1	31–1/2	18	67.0	82.0
CTCXW1	35–15/16	20–1/4	67.0	82.0
CTC2	48	26–5/16	67.0	82.0
CTCW2	56–1/2	30–9/16	67.0	82.0
CTCX2	62–3/4	33–5/8	67.0	82.0
CTC3	71–7/8	38–1/4	67.0	82.0

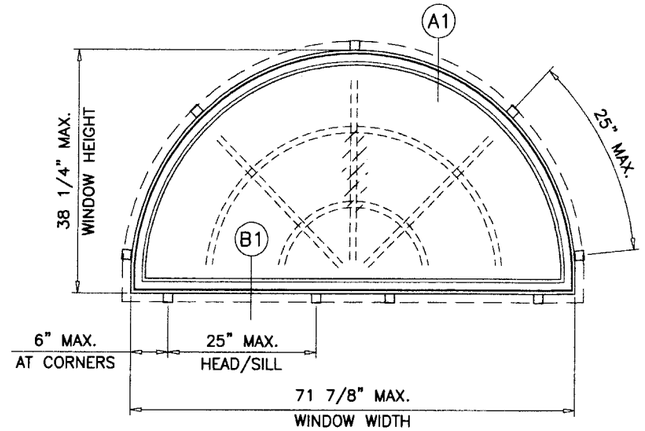

TYPICAL ELEVATION
TESTED UNIT

DESIGN LOAD CAPACITY – PSF				
WINDOW DESCRIPTION	UNIT WIDTH INCHES	UNIT HT. INCHES	LAMINATED GLASS	
			EXT.(+)	INT.(–)
CIR20	24–1/8	24–1/8	67.0	82.0
CIR24	28–3/8	28–3/8	67.0	82.0
CIR30	35–15/16	35–15/16	67.0	82.0

NOTE:
GLASS CAPACITIES ON THIS SHEET
ARE BASED ON
A: ASTM E1300–98 (60 SEC. WIND)
B: ASTM E1300–02 (3 SEC. GUSTS)

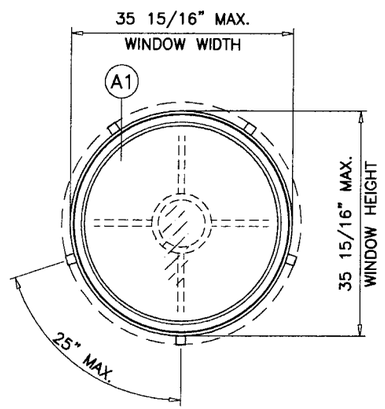

TYPICAL ELEVATION
TESTED UNIT

VINYL CLAD SPECIALTY DIRECT SET WOOD WINDOWS

DESIGN LOAD RATING TO BE AS PER CHARTS SHOWN.

APPROVAL APPLIES TO SINGLE FIXED WINDOWS,

ALSO COMBINATIONS OF FIXED/FIXED OR FIXED WITH OTHER WINDOW TYPES USING MIAMI–DADE COUNTY APPROVED MULLIONS IN BETWEEN.

LOWER DESIGN PRESSURE FROM WINDOWS OR MULLION APPROVAL WILL APPLY TO ENTIRE SYSTEM.

THIS PRODUCT HAS BEEN DESIGNED AND TESTED TO COMPLY WITH THE REQUIREMENTS OF THE FLORIDA BUILDING CODE 2004 EDITION INCLUDING HIGH VELOCITY HURRICANE ZONE.
PRODUCT ALSO COMPLIES WITH REQUIREMENTS OF THE IBC/IRC.

WOOD BUCKS BY OTHERS, MUST BE ANCHORED PROPERLY TO TRANSFER LOADS TO THE STRUCTURE.

ANCHORS SHALL BE AS LISTED, SPACED AS SHOWN ON DETAILS, ANCHORS EMBEDMENT TO BASE MATERIAL SHALL BE BEYOND WALL DRESSING OR STUCCO.

ANCHORING OR LOADING CONDITIONS NOT SHOWN IN THESE DETAILS ARE NOT PART OF THIS APPROVAL.

A LOAD DURATION INCREASE IN ALLOWABLE STRESS IS USED IN DESIGN OF ANCHORS INTO WOOD ONLY.

WINDOWS GLAZED WITH LAMINATED GLASS RATED FOR LARGE MISSILE IMPACT AND REQUIRE NO SHUTTERS.

WINDOW DESCRIPTION
CTC1
CTCW1
CTCX1
CTCXW1
CTC2
CTCW2
CTCX2
CTC3
CIR20
CIR24
CIR30

Engr: DR. HUMAYOUN FAROOQ
STRUCTURES
FLA. PE # 16557
C.A.N. 3538

NOV 0 5 2007

PRODUCT RENEWED
as complying with the Florida Building Code
Acceptance No 07-0820.10
Expiration Date 11/05/2012
By
Miami-Dade Product Control Division

AL-FAROOQ CORPORATION
ENGINEERS & PRODUCT DEVELOPMENT
1235 S.W. 87 AVE
MIAMI, FLORIDA 33174
TEL. (305) 264-8100 FAX. (305) 262-6978
COMP-ANL\W05-36AC

VINYL CLAD DIRECT SET FIXED WOOD WDW. (L.M.I.)

ANDERSEN CORPORATION
100 FOURTH AVE. NORTH
BAYPORT, MN. 55003-1096
TEL. (800) 426-7691 FAX (–)

revisions:			
no	date	by	description
A	10.08.07		REV. PER BCCO COMMENTS

date: 07-22-05
scale: 1/2"=1'-0"
dr. by: HAMID
chk. by:

drawing no.
W05-36

DESIGN LOAD CAPACITY – PSF				
WINDOW DESCRIPTION	UNIT WIDTH INCHES	UNIT HT. INCHES	LAMINATED GLASS	
			EXT.(+)	INT.(–)
CTQC1	24–1/8	24–1/8	67.0	82.0
CTQCW1	28–3/8	28–3/8	67.0	82.0
CTQCX1	31–1/2	31–1/2	67.0	82.0
CTQA3	35–15/16	35–15/16	67.0	82.0

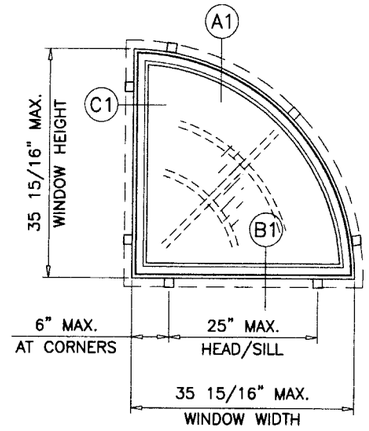

TYPICAL ELEVATION
TESTED UNIT

DESIGN LOAD CAPACITY – PSF				
WINDOW DESCRIPTION	UNIT WIDTH INCHES	UNIT HT. INCHES	LAMINATED GLASS	
			EXT.(+)	INT.(–)
OVL1824	19–3/4	28–3/8	67.0	82.0
OVL2030	24	35–15/16	67.0	82.0
OVL3048	36	56–1/2	67.0	82.0

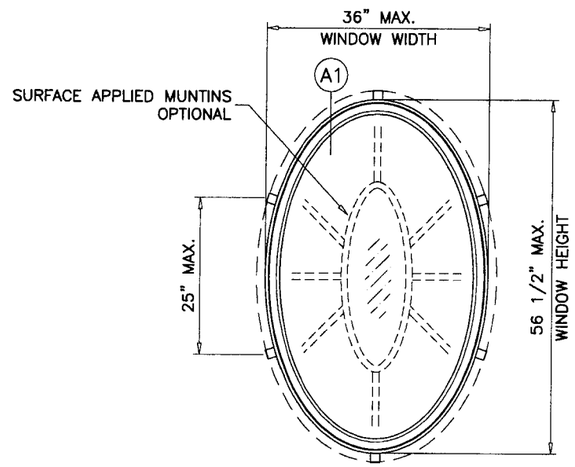

TYPICAL ELEVATION
TESTED UNIT

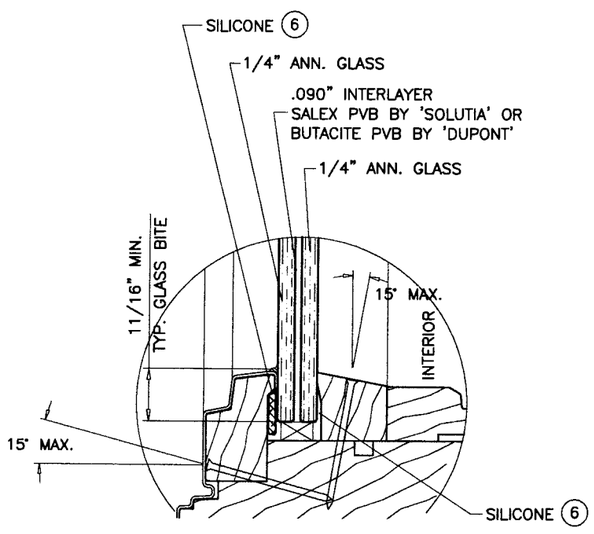

GLAZING DETAIL

WINDOW DESCRIPTION
CTQC1
CTQCW1
CTQCX1
CTQA3
OVL1824
OVL2030
OVL3048

NOTE:
GLASS CAPACITIES ON THIS SHEET ARE BASED ON
A: ASTM E1300–98 (60 SEC. WIND)
B: ASTM E1300–02 (3 SEC. GUSTS)

Engr: DR. HUMAYOUN FAROOQ
STRUCTURES
FLA. PE # 16557
C.A.N. 3538

NOV 0 5 2007

PRODUCT RENEWED
as complying with the Florida Building Code
Acceptance No 07-0820.10
Expiration Date 11/05/2012
By
Miami Dade Product Control Division

AL-FAROOQ CORPORATION
ENGINEERS & PRODUCT DEVELOPMENT
1235 S.W. 87 AVE
MIAMI, FLORIDA 33174
TEL. (305) 264-8100 FAX. (305) 262-6978
COMP-ANL\W05-36AC

VINYL CLAD DIRECT SET FIXED WOOD WDW. (L.M.I.)

ANDERSEN CORPORATION
100 FOURTH AVE. NORTH
BAYPORT, MN. 55003-1096
TEL (800) 426-7691 FAX (-)

revisions:

no	date	by	description
A	10.08.07		REV. PER BCCO COMMENTS

date: 07-22-05
scale: 1/2"=1'-0"
dr. by: HAMID
chk. by:

drawing no.
W05-36

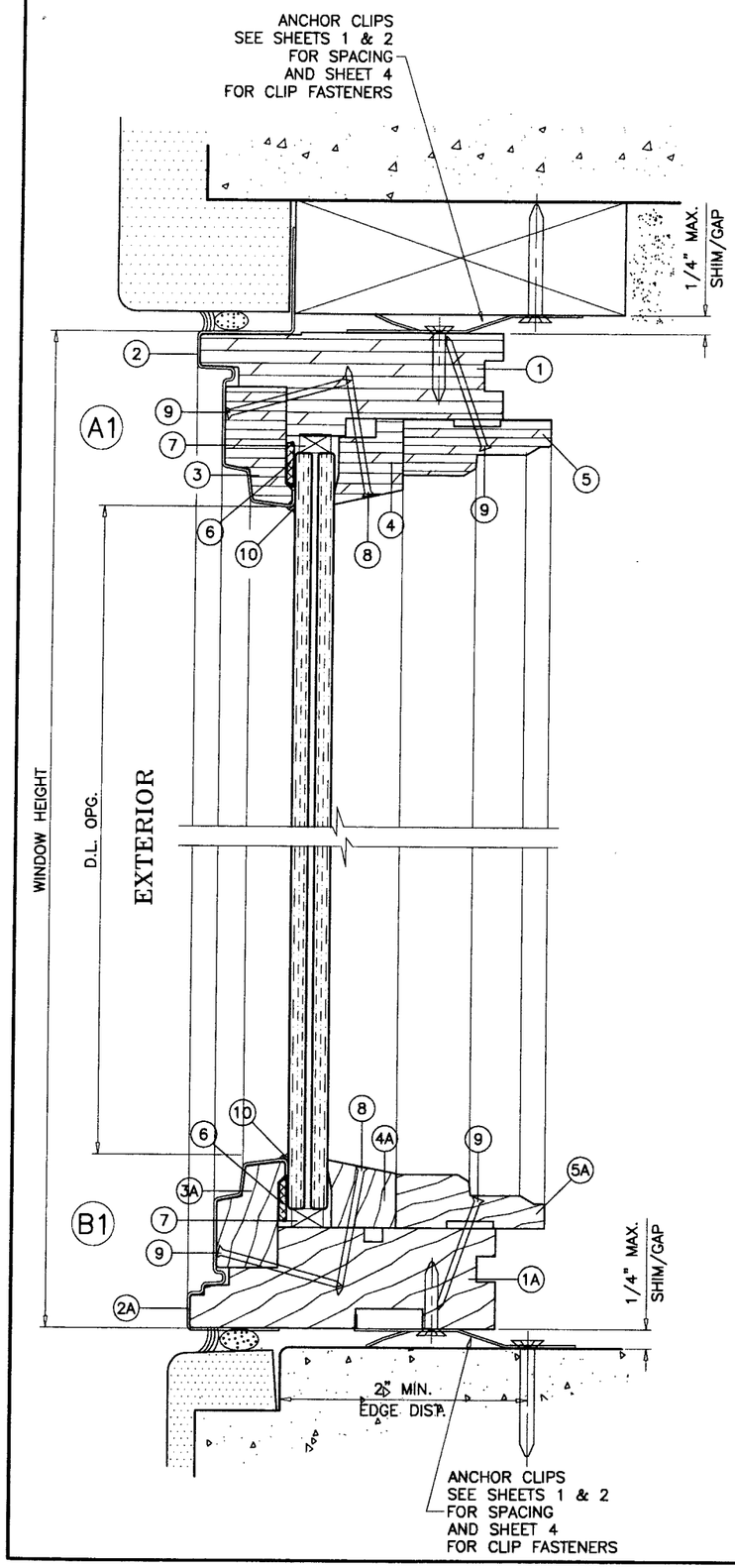

WOOD BUCKS NOT BY ANDERSEN, MUST SUSTAIN LOADS IMPOSED BY GLAZING SYSTEM AND TRANSFER THEM TO THE BUILDING STRUCTURE.

TYPICAL ANCHORS

ANCHORS THRU INSTALLATION CLIPS

A: #8 SMS

INTO 2BY WOOD BUCKS OR WOOD STRUCTURE
1-1/2" MIN. PENETRATION INTO WOOD

B: 1/4" DIA. TAPCONS

INTO 2BY WOOD BUCKS OR WOOD STRUCTURE
1-1/2" MIN. PENETRATION INTO WOOD

THRU WOOD BUCKS INTO MASONRY OR DIRECTLY INTO MASONRY
1-1/4" MIN. EMBED INTO CONC. OR MASONRY

TYPICAL EDGE DISTANCE

INTO CONCRETE AND MASONRY = 2" MIN.
INTO WOOD STRUCTURE = 3/4" MIN.

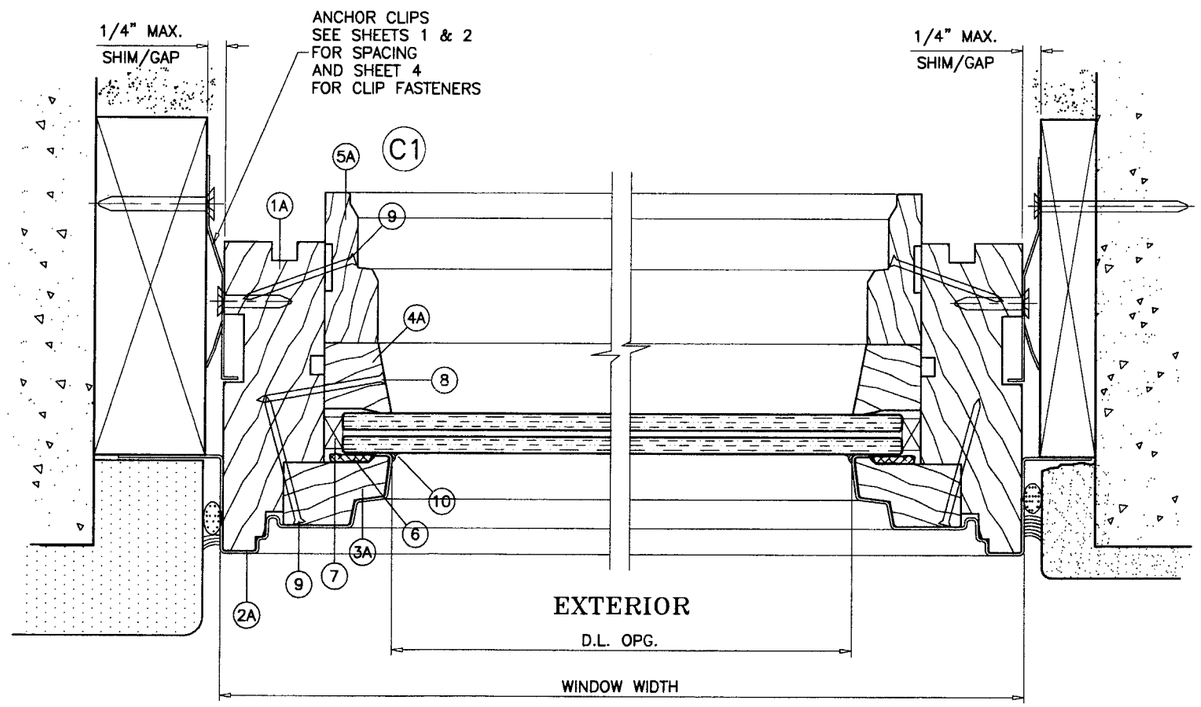

WINDOW DESCRIPTION
CTC1
CTCW1
CTCX1
CTCXW1
CTC2
CTCW2
CTCX2
CTC3
CTQC1
CTQCW1
CTQCX1
CTQA3
CIR20
CIR24
CIR30
OVL1824
OVL2030
OVL3048

Engr: DR. HUMAYOUN FAROOQ
STRUCTURES
FLA. PE # 16557
C.A.N. 3538

NOV 0 5 2007

PRODUCT RENEWED
as complying with the Florida
Building Code
Acceptance No 07-0820.10
Expiration Date 11/05/2012
By
Miami-Dade Product Control
Division

AL-FAROOQ CORPORATION
ENGINEERS & PRODUCT DEVELOPMENT
1235 S.W. 87 AVE
MIAMI, FLORIDA 33174
TEL. (305) 264-8100 FAX. (305) 262-6978
COMP-ANL\W05-36AC

VINYL CLAD DIRECT SET FIXED WOOD WDW. (L.M.I.)

ANDERSEN CORPORATION
100 FOURTH AVE. NORTH
BAYPORT, MN. 55003-1096
TEL. (800) 426-7691 FAX (-)

revisions:

no	date	by	description
A	10.08.07		REV. PER BCCO COMMENTS

date: 07-22-05
scale: 1/2" = 1"
dr. by: HAMID
chk. by:

drawing no.
W05-36

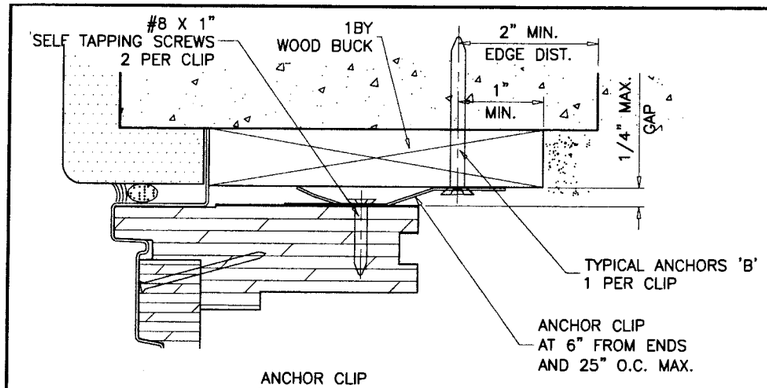

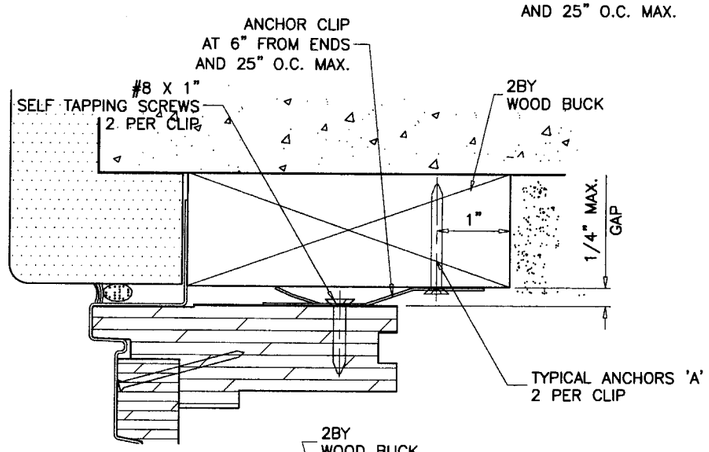

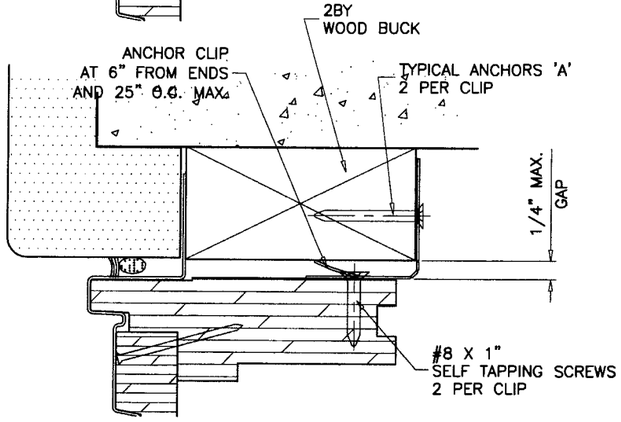

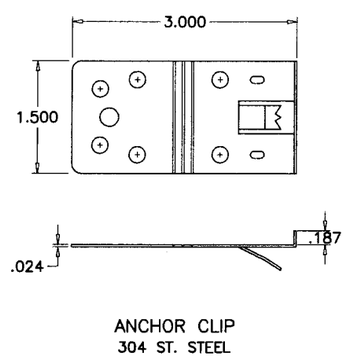

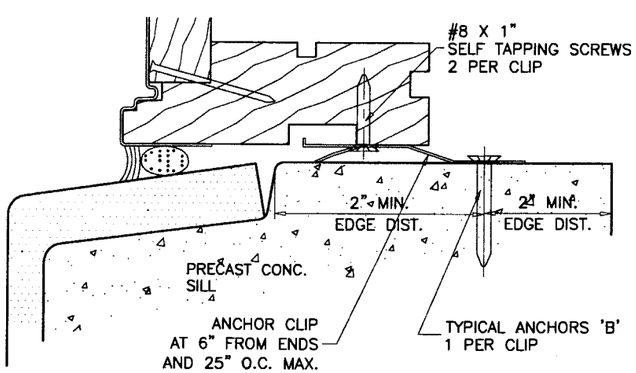

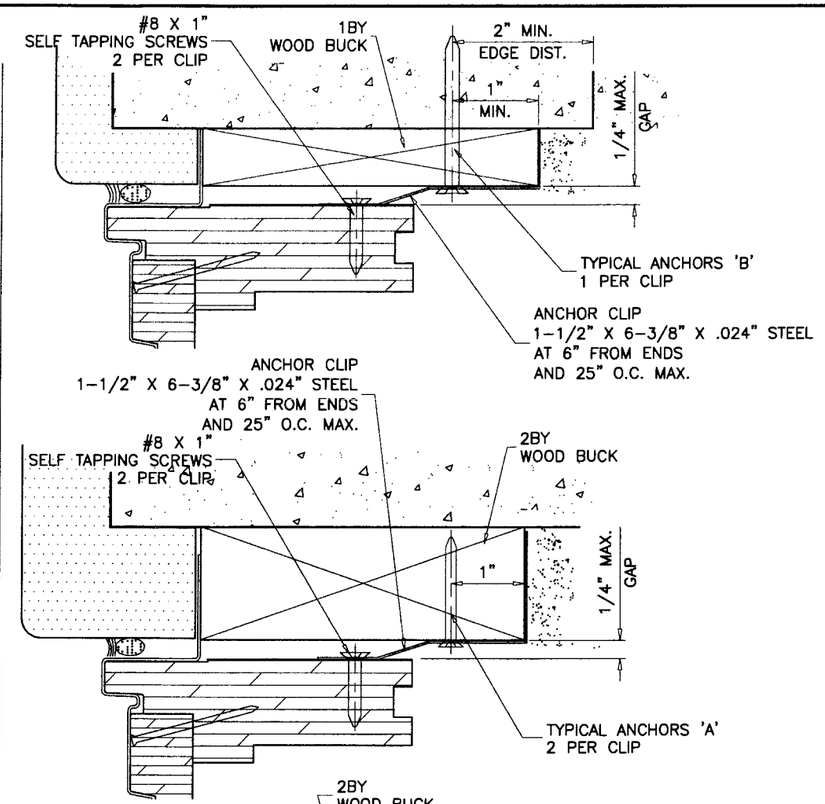

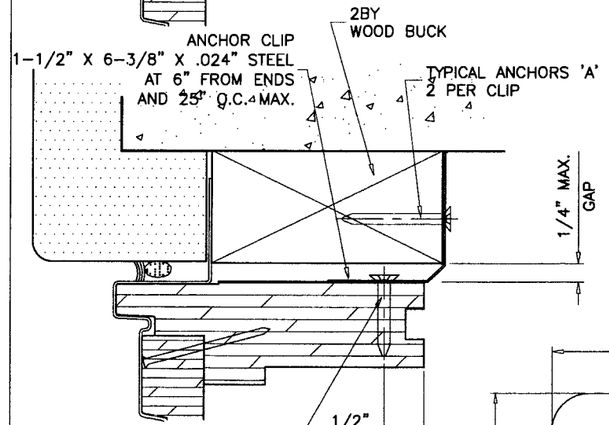

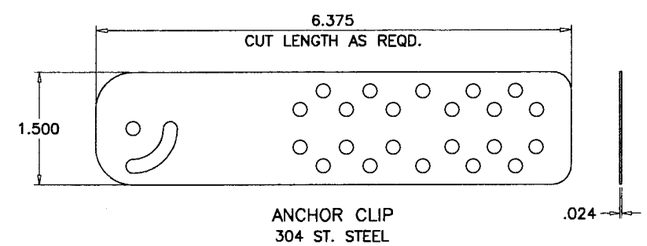

WINDOW DESCRIPTION
CTC1
CTCW1
CTCX1
CTCXW1
CTC2
CTCW2
CTCX2
CTC3
CTQC1
CTQCW1
CTQCX1
CTQA3
CIR20
CIR24
CIR30
OVL1824
OVL2030
OVL3048

Engr: DR. HUMAYOUN FAROOQ
STRUCTURES
FLA. PE # 16557
C.A.N. 3538

NOV 0 5 2007

PRODUCT RENEWED
as complying with the Florida
Building Code
Acceptance No 07-0820.10
Expiration Date 11/05/2012
By
Miami-Dade Product Control
Division

CLIP INSTALLATION DETAILS

AL-FAROOQ CORPORATION
ENGINEERS & PRODUCT DEVELOPMENT
1235 S.W. 87 AVE
MIAMI, FLORIDA 33174
TEL. (305) 264-8100 FAX. (305) 262-6978

COMP-ANL\W05-36AC

VINYL CLAD DIRECT SET FIXED WOOD WDW. (L.M.I.)

ANDERSEN
ANDERSEN CORPORATION
100 FOURTH AVE. NORTH
BAYPORT, MN. 55003-1096
TEL. (800) 426-7691 FAX (-)

revisions:

no	date	by	description
A	10.08.07		REV. PER BCCO COMMENTS

date: 07-22-05
scale: 1/2" = 1"
dr. by: HAMID
chk. by:

drawing no.
W05-36

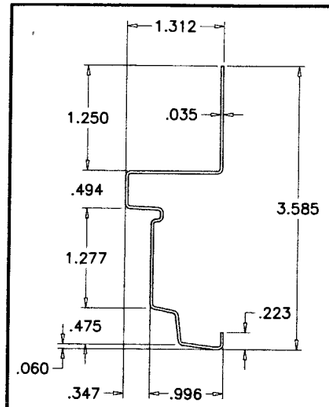

(2) VINYL CLADDING (ARCH)

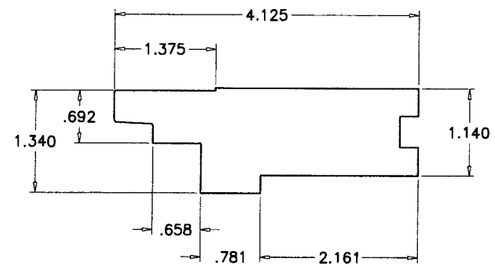

(1) FRAME HEAD/JAMB (ARCH)

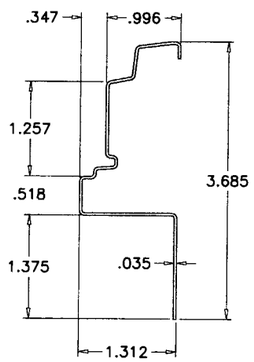

(2A) VINYL CLADDING JAMB/SILL

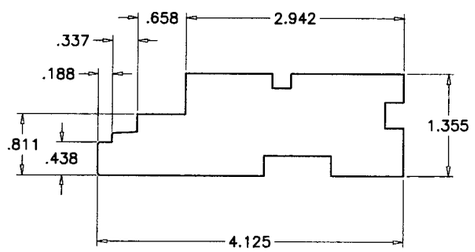

(1A) FRAME JAMB/SILL

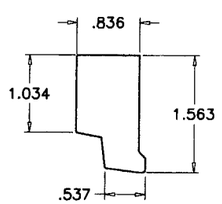

(3) EXTERIOR GLASS STOP (ARCH)

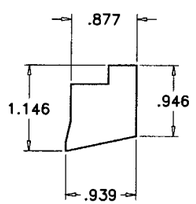

(4) INTERIOR GLASS STOP (ARCH)

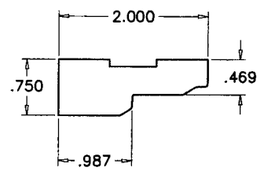

(5) INTERIOR STOP (ARCH)

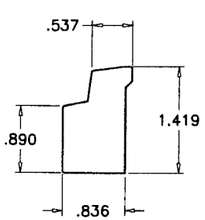

(3A) EXTERIOR GLASS STOP (JAMB/SILL)

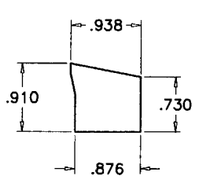

(4A) INTERIOR GLASS STOP (JAMB/SILL)

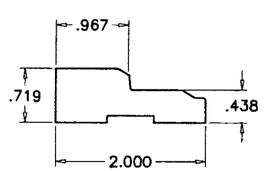

(5A) INTERIOR STOP (JAMB/SILL)

ITEM #	PART NO.	REQD.	DESCRIPTION	MATERIAL	MANF./SUPPLIER/REMARKS
1	27229	AS REQD.	FRAME HEAD/JAMB (ARCH)	WOOD	ANDERSEN
1A	27230	AS REQD.	FRAME JAMB/SILL	WOOD	ANDERSEN
2	27231	AS REQD.	FRAME COVER (ARCH)	VINYL	–
2A	–	AS REQD.	FRAME COVER (JAMB/SILL)	VINYL	–
3	27215	AS REQD.	EXTERIOR GLASS STOP (ARCH)	WOOD	ANDERSEN
3A	27214	AS REQD.	EXTERIOR GLASS STOP (JAMB/SILL)	WOOD	ANDERSEN
4	27082	AS REQD.	INTERIOR GLASS STOP (ARCH)	WOOD	ANDERSEN
4A	27227	AS REQD.	INTERIOR GLASS STOP (JAMB/SILL)	WOOD	ANDERSEN
5	27083	AS REQD.	INTERIOR STOP (ARCH)	WOOD	ANDERSEN
5A	27084	AS REQD.	INTERIOR STOP (JAMB/SILL)	WOOD	ANDERSEN
6	–	AS REQD.	GLAZING COMPOUND	SILICONE	DOW CORNING
7	20065	AS REQD.	SETTING BLOCK SPACER	–	–
8	27255	–	GALVANIZED NAILS AT 7" O.C.	–	16 GA. X 1-3/4"
9	27255	–	GALVANIZED NAILS AT 7" O.C.	–	16 GA. X 1-1/2"
10	–	AS REQD.	FILLET BEAD	SILICONE	DOW OR GE
11	–	–	–	–	–

NON CURVED PROFILES COMPOSED OF YELLOW PINE, PONDEROSA PINE OR EQUAL.
CURVED PROFILES COMPOSED OF LAMINATED YELLOW POPLAR, MAPLE OR SELECT HARD WOODS.

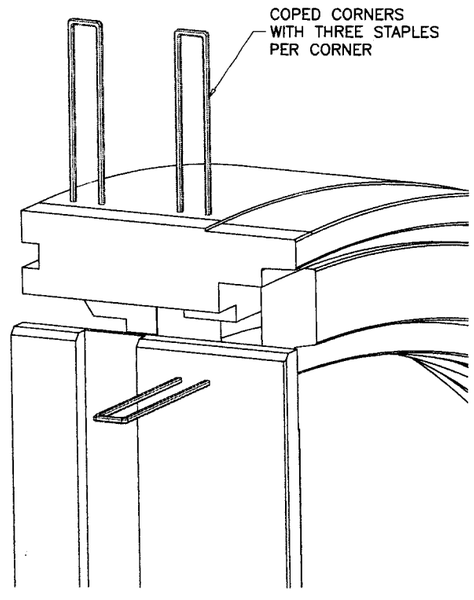

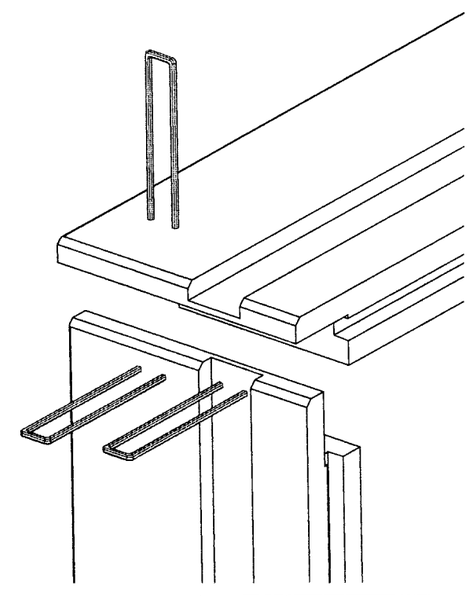

FRAME CORNERS

WINDOW DESCRIPTION
CTC1
CTCW1
CTCX1
CTCXW1
CTC2
CTCW2
CTCX2
CTC3
CTQC1
CTQCW1
CTQCX1
CTQA3
CIR20
CIR24
CIR30
OVL1824
OVL2030
OVL3048

Engr: DR. HUMAYOUN FAROOQ
STRUCTURES
FLA. PE # 16557
C.A.N. 3538

NOV 0 5 2007

PRODUCT RENEWED
as complying with the Florida
Building Code
Acceptance No 07-0820.10
Expiration Date 11/05/2012
By
Miami-Dade Product Control
Division

AL-FAROOQ CORPORATION
ENGINEERS & PRODUCT DEVELOPMENT
1235 S.W. 87 AVE
MIAMI, FLORIDA 33174
TEL. (305) 264-8100 FAX. (305) 262-6978

COMP-ANL\W05-36AC

VINYL CLAD DIRECT SET FIXED WOOD WDW. (L.M.I.)

ANDERSEN CORPORATION
100 FOURTH AVE. NORTH
BAYPORT, MN. 55003-1096
TEL. (800) 426-7691 FAX (-)

revisions:

no	date	by	description
A	10.08.07		REV. PER BCCO COMMENTS

date: 07-22-05
scale: 1/2" = 1"
dr. by: HAMID
chk. by:

drawing no.
W05-36

DESIGN LOAD CAPACITY – PSF				
WINDOW DESCRIPTION	UNIT WIDTH INCHES	UNIT HT. INCHES	LAMINATED GLASS	
			EXT.(+)	INT.(–)
ET8	95–1/4	21	67.0	71.0
ET6	71–1/4	16–3/4	67.0	71.0

NOTE:
GLASS CAPACITIES ON THIS SHEET ARE BASED ON
A: ASTM E1300–98 (60 SEC. WIND)
B: ASTM E1300–02 (3 SEC. GUSTS)

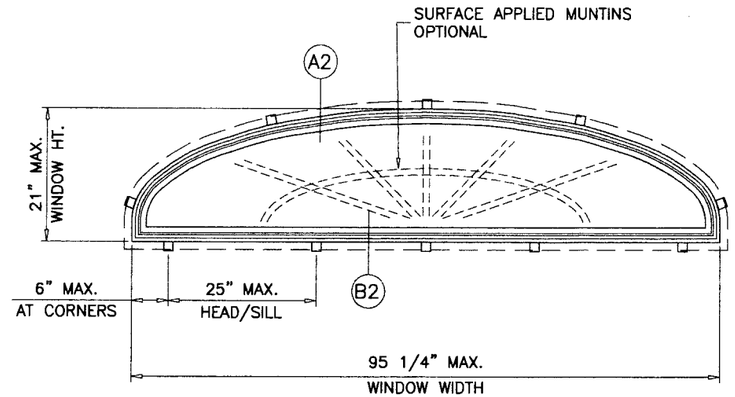

TYPICAL ELEVATION
TESTED UNIT

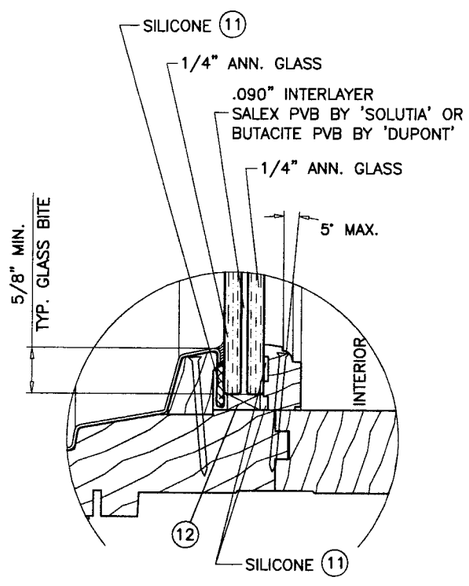

GLAZING DETAIL

WINDOW DESCRIPTION
ET8
ET6

Engr: DR. HUMAYOUN FAROOQ
STRUCTURES
FLA. PE # 16557
C.A.N. 3538

NOV 0 5 2007

PRODUCT RENEWED
as complying with the Florida Building Code
Acceptance No 07-0820.10
Expiration Date 11/05/2012
By
Miami-Dade Product Control Division

AL-FAROOQ CORPORATION
ENGINEERS & PRODUCT DEVELOPMENT
1235 S.W. 87 AVE
MIAMI, FLORIDA 33174
TEL. (305) 264-8100 FAX. (305) 262-6978

COMP–ANL\W05–36AC

VINYL CLAD DIRECT SET FIXED WOOD WDW. (L.M.I.)

ANDERSEN CORPORATION
100 FOURTH AVE. NORTH
BAYPORT, MN. 55003–1096
TEL (800) 426–7691 FAX (–)

revisions:

no	date	by	description
A	10.08.07		REV. PER BCCO COMMENTS

date: 07–22–05
scale: 1/2"=1'–0"
dr. by: HAMID
chk. by:

drawing no.
W05–36

sheet 6 of 14

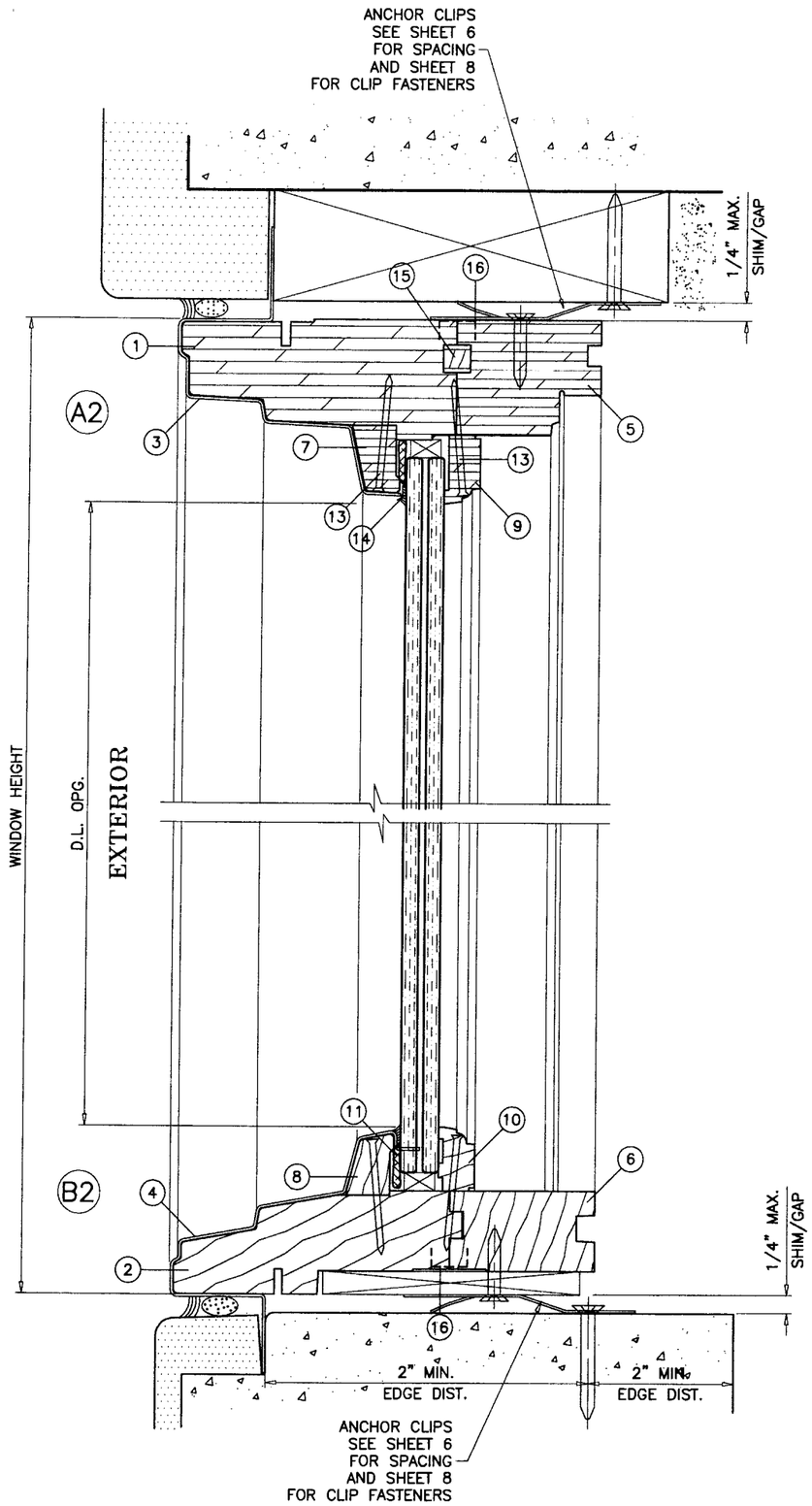

WOOD BUCKS NOT BY ANDERSEN, MUST SUSTAIN LOADS IMPOSED BY GLAZING SYSTEM AND TRANSFER THEM TO THE BUILDING STRUCTURE.

TYPICAL ANCHORS

ANCHORS THRU INSTALLATION CLIPS

A: #8 SMS

INTO 2BY WOOD BUCKS OR WOOD STRUCTURE
1-1/2" MIN. PENETRATION INTO WOOD

B: 1/4" DIA. TAPCONS

INTO 2BY WOOD BUCKS OR WOOD STRUCTURE
1-1/2" MIN. PENETRATION INTO WOOD

THRU WOOD BUCKS INTO MASONRY OR DIRECTLY INTO MASONRY
1-1/4" MIN. EMBED INTO CONC. OR MASONRY

TYPICAL EDGE DISTANCE

INTO CONCRETE AND MASONRY = 2" MIN.
INTO WOOD STRUCTURE = 3/4" MIN.

WINDOW DESCRIPTION
ET8
ET6

Engr: DR. HUMAYOUN FAROOQ
STRUCTURES
FLA. PE # 16557
C.A.N. 3538

NOV 0 5 2007

PRODUCT RENEWED
as complying with the Florida
Building Code
Acceptance No 07-0820.10
Expiration Date 11/05/2012
By
Miami-Dade Product Control
Division

AL-FAROOQ CORPORATION
ENGINEERS & PRODUCT DEVELOPMENT
1235 S.W. 87 AVE
MIAMI, FLORIDA 33174
TEL. (305) 264-8100 FAX. (305) 262-6978

COMP-ANL\W05-36AC

VINYL CLAD DIRECT SET FIXED WOOD WDW. (L.M.I.)

ANDERSEN CORPORATION
100 FOURTH AVE. NORTH
BAYPORT, MN. 55003-1096
TEL. (800) 426-7691 FAX (-)

revisions:

no	date	by	description
A	10.08.07		REV. PER BCCO COMMENTS

date: 07-22-05
scale: 1/2" = 1"
dr. by: HAMID
chk. by:

drawing no.
W05-36

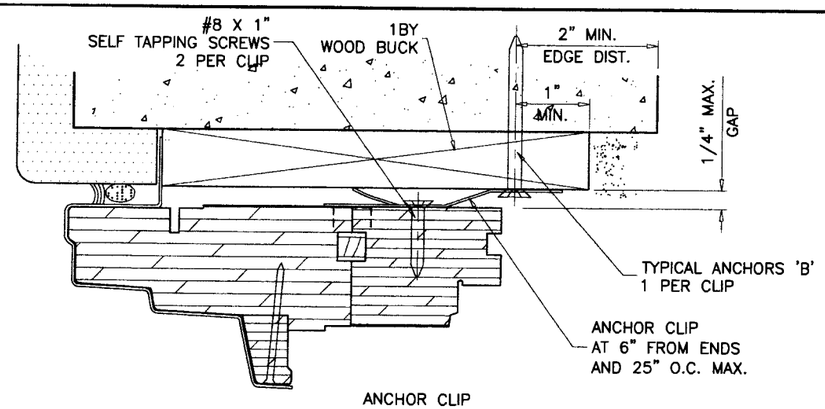

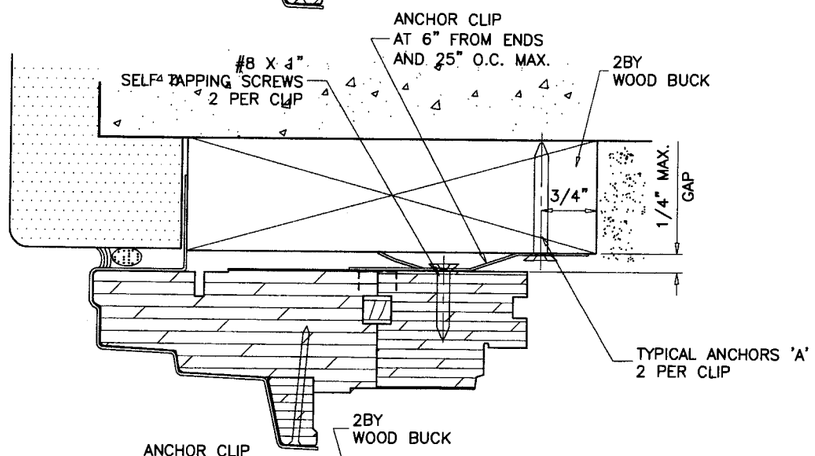

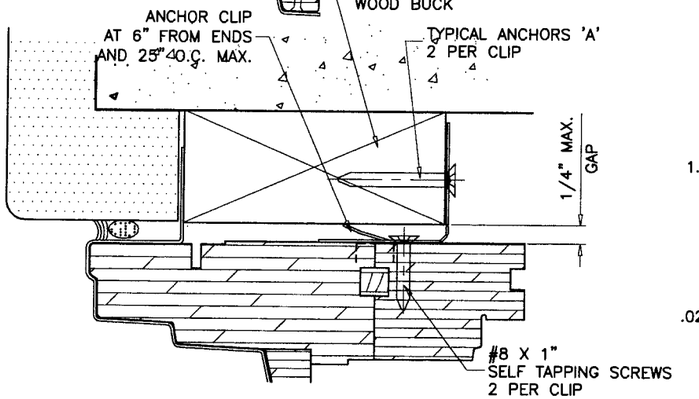

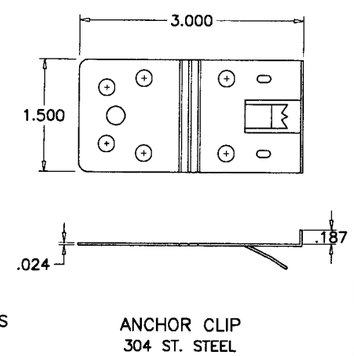

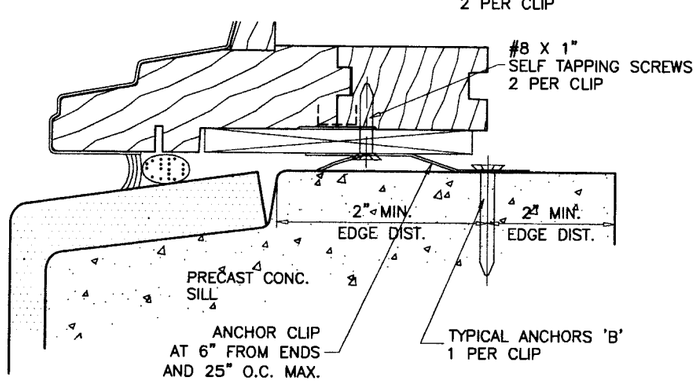

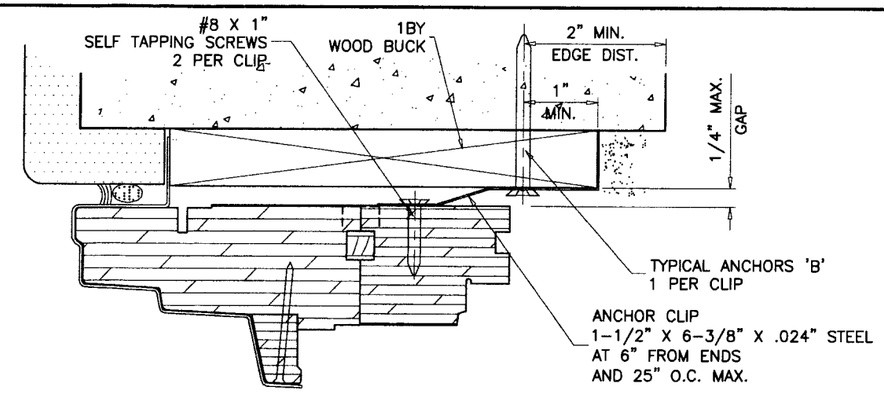

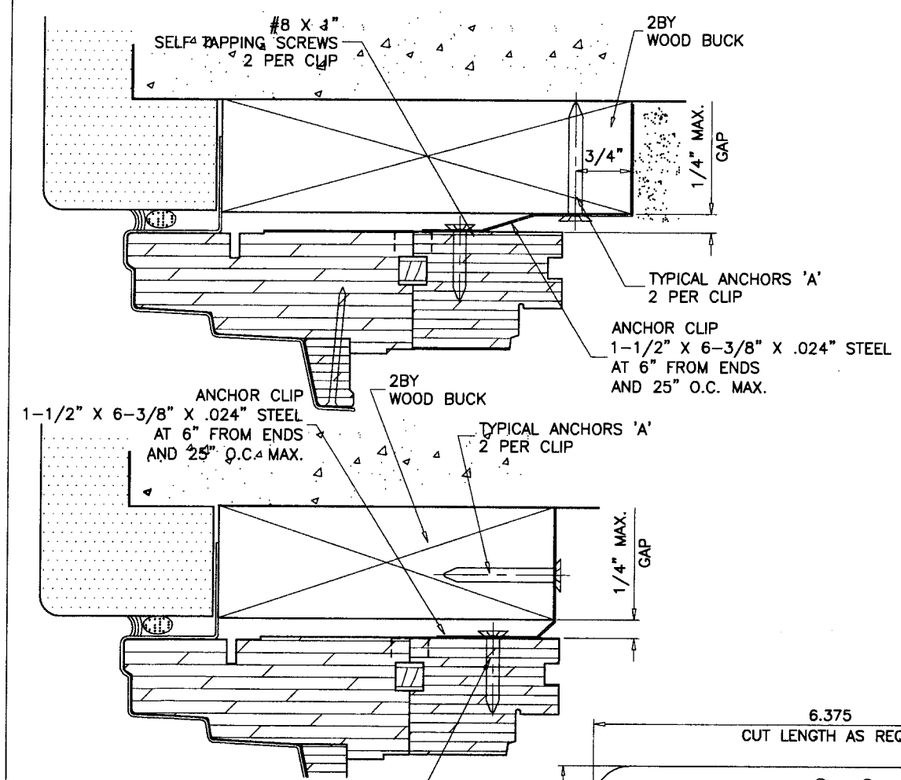

WINDOW DESCRIPTION
ET8
ET6

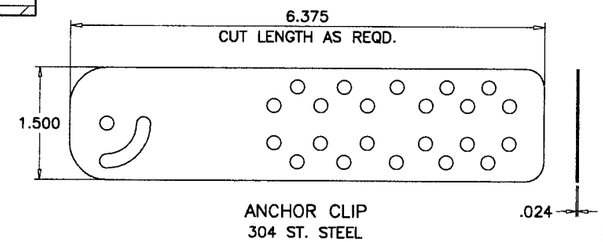

CLIP INSTALLATION DETAILS

Engr: DR. HUMAYOUN FAROOQ
STRUCTURES
FLA. PE # 16557
C.A.N. 3538

NOV 0 5 2007

PRODUCT RENEWED
as complying with the Florida
Building Code
Acceptance No 07-0820.10
Expiration Date 11/05/2012
By
Miami-Dade Product Control
Division

AL-FAROOQ CORPORATION
ENGINEERS & PRODUCT DEVELOPMENT
1235 S.W. 87 AVE
MIAMI, FLORIDA 33174
TEL. (305) 264-8100 FAX. (305) 262-6978
COMP-ANL\W05-36AC

VINYL CLAD DIRECT SET FIXED WOOD WDW. (L.M.I.)

ANDERSEN CORPORATION
100 FOURTH AVE. NORTH
BAYPORT, MN. 55003-1096
TEL (800) 426-7691 FAX (-)

revisions:

no	date	by	description
A	10.08.07		REV. PER BCCO COMMENTS

date: 07-22-05
scale: 1/2" = 1"
dr. by: HAMID
chk. by:

drawing no.
W05-36

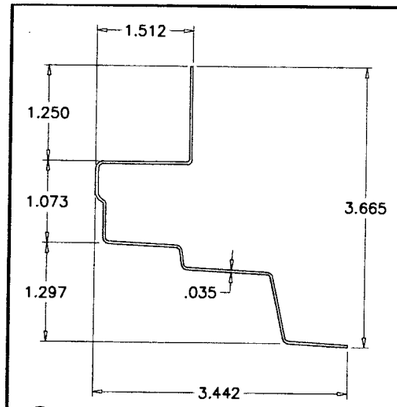

3 VINYL CLADDING (HEAD)

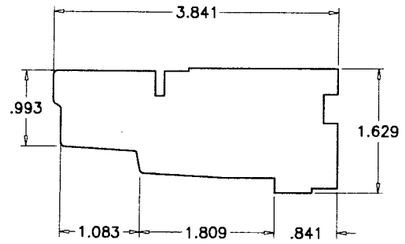

1 FRAME HEAD

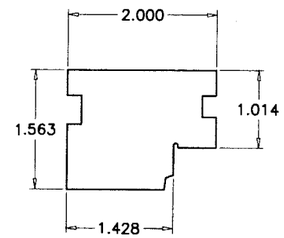

5 INTERIOR FRAME (HEAD)

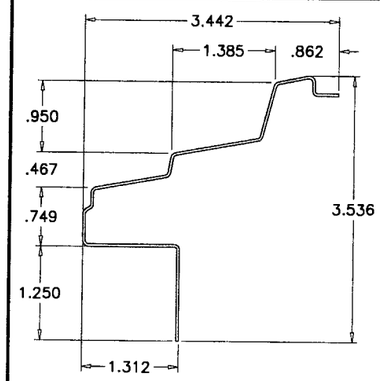

4 VINYL CLADDING (SILL)

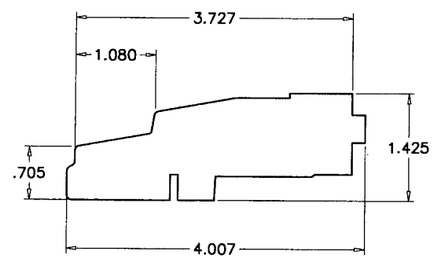

2 FRAME SILL

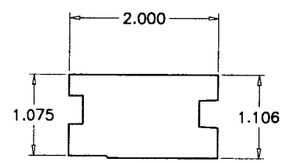

6 INTERIOR FRAME (SILL)

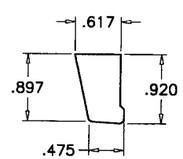

7 EXTERIOR GLASS STOP (HEAD)

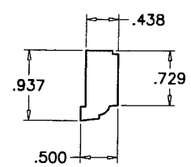

9 INTERIOR GLASS STOP (HEAD)

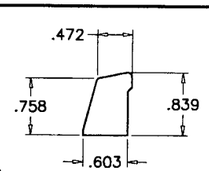

8 EXTERIOR GLASS STOP (SILL)

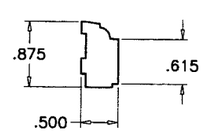

10 INTERIOR GLASS STOP (SILL)

ITEM #	PART NO.	REQD.	DESCRIPTION	MATERIAL	MANF./SUPPLIER/REMARKS
1	53105	1	FRAME HEAD	WOOD	ANDERSEN
2	53103	1	FRAME SILL	WOOD	ANDERSEN
3	53108	1	FRAME COVER (HEAD)	VINYL	–
4	53108	1	FRAME COVER (SILL)	VINYL	–
5	53110	1	FRAME INTERIOR (HEAD)	WOOD	ANDERSEN
6	53111	1	FRAME INTERIOR (SILL)	WOOD	ANDERSEN
7	53115	1	EXTERIOR GLASS STOP (HEAD)	WOOD	ANDERSEN
8	53116	1	EXTERIOR GLASS STOP (SILL)	WOOD	ANDERSEN
9	53071	1	INTERIOR GLASS STOP (HEAD)	WOOD	ANDERSEN
10	53120	–	INTERIOR GLASS STOP (SILL)	WOOD	ANDERSEN
11	–	AS REQD.	GLAZING COMPOUND	SILICONE	DOW
12	20065	AS REQD.	SETTING BLOCK SPACER	–	–
13	27255	–	GALVANIZED NAILS AT 7" O.C.	–	16 GA. X 1-3/4"
14	–	AS REQD.	FILLET BEAD	SILICONE	DOW OR GE
15	53180	AS REQD.	SPLINE	PVC FOAM	–
16	4220150	AS REQD.	3/8" CORRUGATED STAPLES	STEEL	–

NON CURVED PROFILES COMPOSED OF YELLOW PINE, PONDEROSA PINE OR EQUAL.
CURVED PROFILES COMPOSED OF LAMINATED YELLOW POPLAR, MAPLE OR SELECT HARD WOODS.

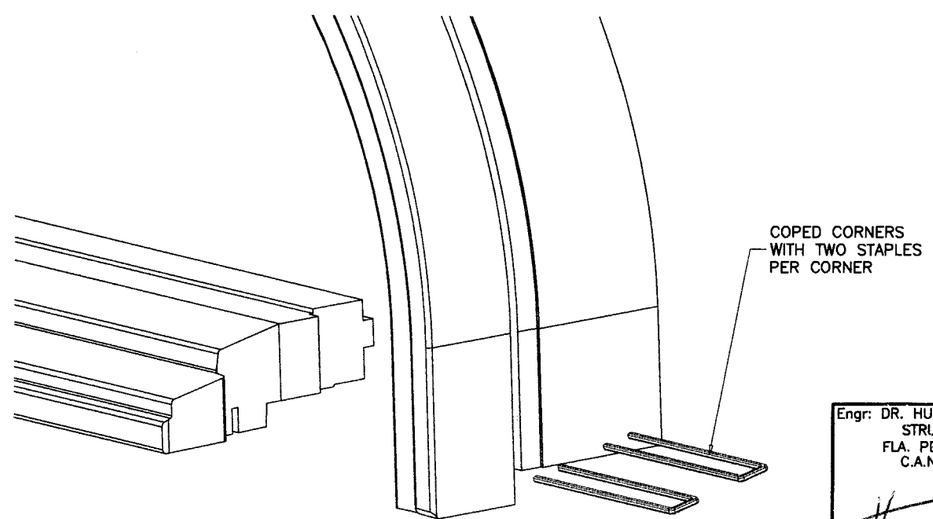

FRAME CORNERS

WINDOW DESCRIPTION
ET8
ET6

Engr: DR. HUMAYOUN FAROOQ
STRUCTURES
FLA. PE # 16557
C.A.N. 3538

NOV 0 5 2007

PRODUCT RENEWED
as complying with the Florida
Building Code
Acceptance No 07-0820.10
Expiration Date 11/05/2012
By
Miami-Dade Product Control
Division

AL-FAROOQ CORPORATION
ENGINEERS & PRODUCT DEVELOPMENT
1235 S.W. 87 AVE
MIAMI, FLORIDA 33174
TEL. (305) 264-8100 FAX. (305) 262-6978
COMP-ANL\W05-36AC

VINYL CLAD DIRECT SET FIXED WOOD WDW. (L.M.I.)

ANDERSEN CORPORATION
100 FOURTH AVE. NORTH
BAYPORT, MN. 55003-1096
TEL. (800) 426-7691 FAX (-)

revisions:

no	date	by	description
A	10.08.07		REV. PER BCCO COMMENTS

date: 07-22-05
scale: 1/2" = 1"
dr. by: HAMID
chk. by:

drawing no.
W05-36

DESIGN LOAD CAPACITY – PSF				
WINDOW DESCRIPTION	UNIT WIDTH INCHES	UNIT HT. INCHES	LAMINATED GLASS EXT.(+)	LAMINATED GLASS INT.(–)
PTR3010	35–15/16	12	67.0	75.0
PTR3510	40–13/16		67.0	75.0
PTR4010	48		67.0	75.0
PTR4510	52–13/16		67.0	75.0
PTR5010	59–7/8		67.0	75.0
PTR5510	64–13/16		67.0	75.0
PTR6010	71–7/8		67.0	75.0
P3030	35–15/16	35–15/16	67.0	75.0
P3530	40–13/16		67.0	75.0
P4030	48		67.0	75.0
P4530	52–13/16		67.0	75.0
P5030	59–7/8		67.0	75.0
P5530	64–13/16		67.0	75.0
P6030	71–7/8		67.0	75.0
P3035	35–15/16	40–13/16	67.0	75.0
P3535	40–13/16		67.0	75.0
P4035	48		67.0	75.0
P4535	52–13/16		67.0	75.0
P5035	59–7/8		67.0	75.0
P5535	64–13/16		67.0	75.0
P6035	71–7/8		67.0	75.0
P3040	35–15/16	48	67.0	75.0
P3540	40–13/16		67.0	75.0
P4040	48		67.0	75.0
P4540	52–13/16		67.0	75.0
P5040	59–7/8		67.0	75.0
P5540	64–13/16		67.0	75.0
P6040	71–7/8		67.0	75.0
P3045	35–15/16	52–13/16	67.0	75.0
P3545	40–13/16		67.0	75.0
P4045	48		67.0	75.0
P4545	52–13/16		67.0	75.0
P5045	59–7/8		67.0	75.0
P5545	64–13/16		67.0	75.0
P6045	71–7/8		67.0	75.0
P3050	35–15/16	59–7/8	67.0	75.0
P3550	40–13/16		67.0	75.0
P4050	48		67.0	75.0
P4550	52–13/16		67.0	75.0
P5050	59–7/8		67.0	75.0
P5550	64–13/16		67.0	75.0
P6050	71–7/8		67.0	75.0
P3055	35–15/16	64–13/16	67.0	75.0
P3555	40–13/16		67.0	75.0
P4055	48		67.0	75.0
P4555	52–13/16		67.0	75.0
P5055	59–7/8		67.0	73.9
P3060	35–15/16	71–7/8	67.0	75.0
P3560	40–13/16		67.0	75.0
P4060	48		67.0	75.0
P4560	52–13/16		67.0	75.0
P5060	59–7/8		65.7	65.7

GLASS CAPACITIES ON THIS CHART ARE BASED ON ASTM E1300–98 (60 SEC. WIND)

DESIGN LOAD CAPACITY – PSF				
WINDOW DESCRIPTION	UNIT WIDTH INCHES	UNIT HT. INCHES	LAMINATED GLASS EXT.(+)	LAMINATED GLASS INT.(–)
PTR3010	35–15/16	12	67.0	75.0
PTR3510	40–13/16		67.0	75.0
PTR4010	48		67.0	75.0
PTR4510	52–13/16		67.0	75.0
PTR5010	59–7/8		67.0	75.0
PTR5510	64–13/16		67.0	75.0
PTR6010	71–7/8		67.0	75.0
P3030	35–15/16	35–15/16	67.0	75.0
P3530	40–13/16		67.0	75.0
P4030	48		67.0	75.0
P4530	52–13/16		67.0	75.0
P5030	59–7/8		67.0	75.0
P5530	64–13/16		67.0	75.0
P6030	71–7/8		67.0	75.0
P3035	35–15/16	40–13/16	67.0	75.0
P3535	40–13/16		67.0	75.0
P4035	48		67.0	75.0
P4535	52–13/16		67.0	75.0
P5035	59–7/8		67.0	75.0
P5535	64–13/16		67.0	75.0
P6035	71–7/8		67.0	75.0
P3040	35–15/16	48	67.0	75.0
P3540	40–13/16		67.0	75.0
P4040	48		67.0	75.0
P4540	52–13/16		67.0	75.0
P5040	59–7/8		67.0	75.0
P5540	64–13/16		67.0	75.0
P6040	71–7/8		67.0	75.0
P3045	35–15/16	52–13/16	67.0	75.0
P3545	40–13/16		67.0	75.0
P4045	48		67.0	75.0
P4545	52–13/16		67.0	75.0
P5045	59–7/8		67.0	75.0
P5545	64–13/16		67.0	75.0
P6045	71–7/8		67.0	75.0
P3050	35–15/16	59–7/8	67.0	75.0
P3550	40–13/16		67.0	75.0
P4050	48		67.0	75.0
P4550	52–13/16		67.0	75.0
P5050	59–7/8		67.0	75.0
P5550	64–13/16		67.0	75.0
P6050	71–7/8		67.0	75.0
P3055	35–15/16	64–13/16	67.0	75.0
P3555	40–13/16		67.0	75.0
P4055	48		67.0	75.0
P4555	52–13/16		67.0	75.0
P5055	59–7/8		67.0	75.0
P3060	35–15/16	71–7/8	67.0	75.0
P3560	40–13/16		67.0	75.0
P4060	48		67.0	75.0
P4560	52–13/16		67.0	75.0
P5060	59–7/8		67.0	75.0

GLASS CAPACITIES ON THIS CHART ARE BASED ON ASTM E1300–02 (3 SEC. GUSTS)

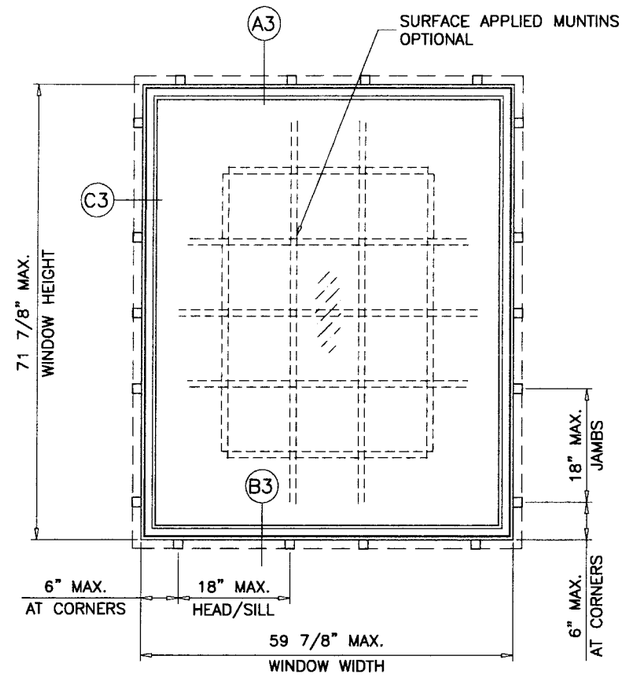

TYPICAL ELEVATION
TESTED UNIT

WINDOW DESCRIPTION
PTR3010
PTR3510
PTR4010
PTR4510
PTR5010
PTR5510
PTR6010
P3030
P3530
P4030
P4530
P5030
P5530
P6030
P3035
P3535
P4035
P4535
P5035
P5535
P6035
P3040
P3540
P4040
P4540
P5040
P5540
P6040
P3045
P3545
P4045
P4545
P5045
P5545
P6045
P3050
P3550
P4050
P4550
P5050
P5550
P6050
P3055
P3555
P4055
P4555
P5055
P3060
P3560
P4060
P4560
P5060

Engr: DR. HUMAYOUN FAROOQ
STRUCTURES
FLA. PE # 16557
C.A.N. 3538

NOV 0 5 2007

PRODUCT RENEWED
as complying with the Florida
Building Code
Acceptance No 07-0820.10
Expiration Date 11/05/2012
By
Miami/Dade Product Control
Division

AL-FAROOQ CORPORATION
ENGINEERS & PRODUCT DEVELOPMENT
1235 S.W. 87 AVE
MIAMI, FLORIDA 33174
TEL. (305) 264-8100 FAX. (305) 262-6978

COMP–ANL\W05–36AC

VINYL CLAD DIRECT SET FIXED WOOD WDW. (L.M.I.)

ANDERSEN CORPORATION
100 FOURTH AVE. NORTH
BAYPORT, MN. 55003–1096
TEL. (800) 426–7691 FAX (–)

revisions:			
no	date	by	description
A	10.08.07		REV. PER BCCO COMMENTS

date: 07–22–05
scale: 1/2"=1'–0"
dr. by: HAMID
chk. by:

drawing no.
W05–36

DESIGN LOAD CAPACITY – PSF				
WINDOW DESCRIPTION	UNIT WIDTH INCHES	UNIT HT. INCHES	LAMINATED GLASS	
			EXT.(+)	INT.(–)
CTR1510	17	12	67.0	75.0
CTR1810	20–1/2		67.0	75.0
CTR2010	24–1/8		67.0	75.0
CTR2410	28–3/8		67.0	75.0
CTR2810	31–1/2		67.0	75.0
CTR3010	33–15/16		67.0	75.0
CTR2910	33–3/4		67.0	75.0
CTR3410	40–3/4		67.0	75.0
CTR4010	48		67.0	75.0
CTR4810	56–1/2		67.0	75.0
CTR5210	64–3/4		67.0	75.0
CTR51110	71–5/8		67.0	75.0
CTR6010	71–7/8		67.0	75.0
CTR7010	84–5/8		67.0	75.0

NOTE:
GLASS CAPACITIES ON THIS SHEET ARE BASED ON
A: ASTM E1300–98 (60 SEC. WIND)
B: ASTM E1300–02 (3 SEC. GUSTS)

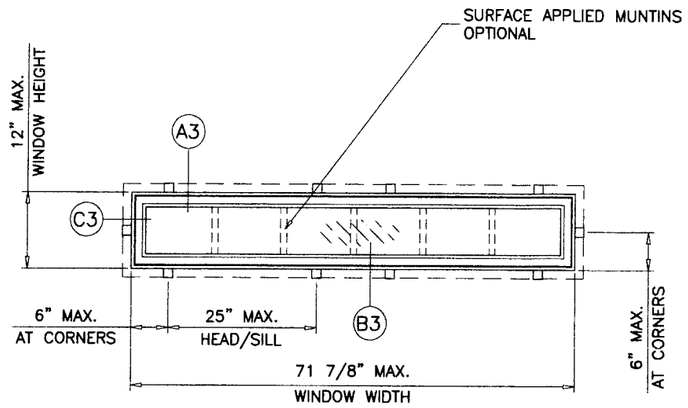

TYPICAL ELEVATION
TESTED UNIT

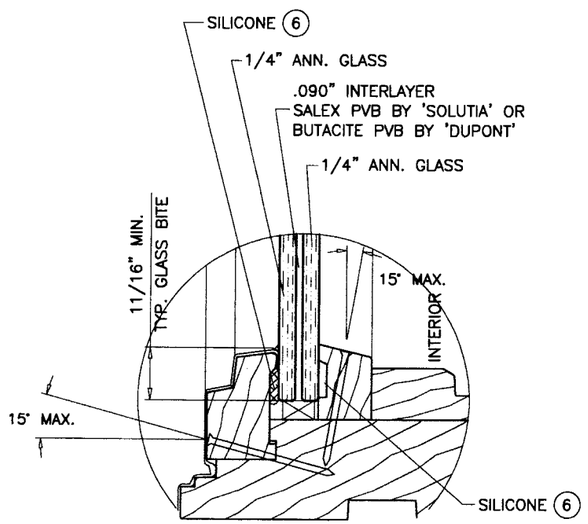

GLAZING DETAIL

WINDOW DESCRIPTION
CTR1510
CTR1810
CTR2010
CTR2410
CTR2810
CTR3010
CTR2910
CTR3410
CTR4010
CTR4810
CTR5210
CTR51110
CTR6010
CTR7010

Engr: DR. HUMAYOUN FAROOQ
STRUCTURES
FLA. PE # 16557
C.A.N. 3538

NOV 05 2007

PRODUCT RENEWED
as complying with the Florida Building Code
Acceptance No 07-0820.10
Expiration Date 11/05/2012
By
Miami-Dade Product Control Division

AL-FAROOQ CORPORATION
ENGINEERS & PRODUCT DEVELOPMENT
1235 S.W. 87 AVE
MIAMI, FLORIDA 33174
TEL. (305) 264-8100 FAX. (305) 262-6978
COMP-ANL\W05-36AC

VINYL CLAD DIRECT SET FIXED WOOD WDW. (L.M.I.)

ANDERSEN CORPORATION
100 FOURTH AVE. NORTH
BAYPORT, MN. 55003-1096
TEL. (800) 426-7691 FAX (–)

revisions:			
no	date	by	description
A	10.08.07		REV. PER BCCO COMMENTS

date: 07-22-05
scale: 1/2"=1'-0"
dr. by: HAMID
chk. by:

drawing no. W05-36

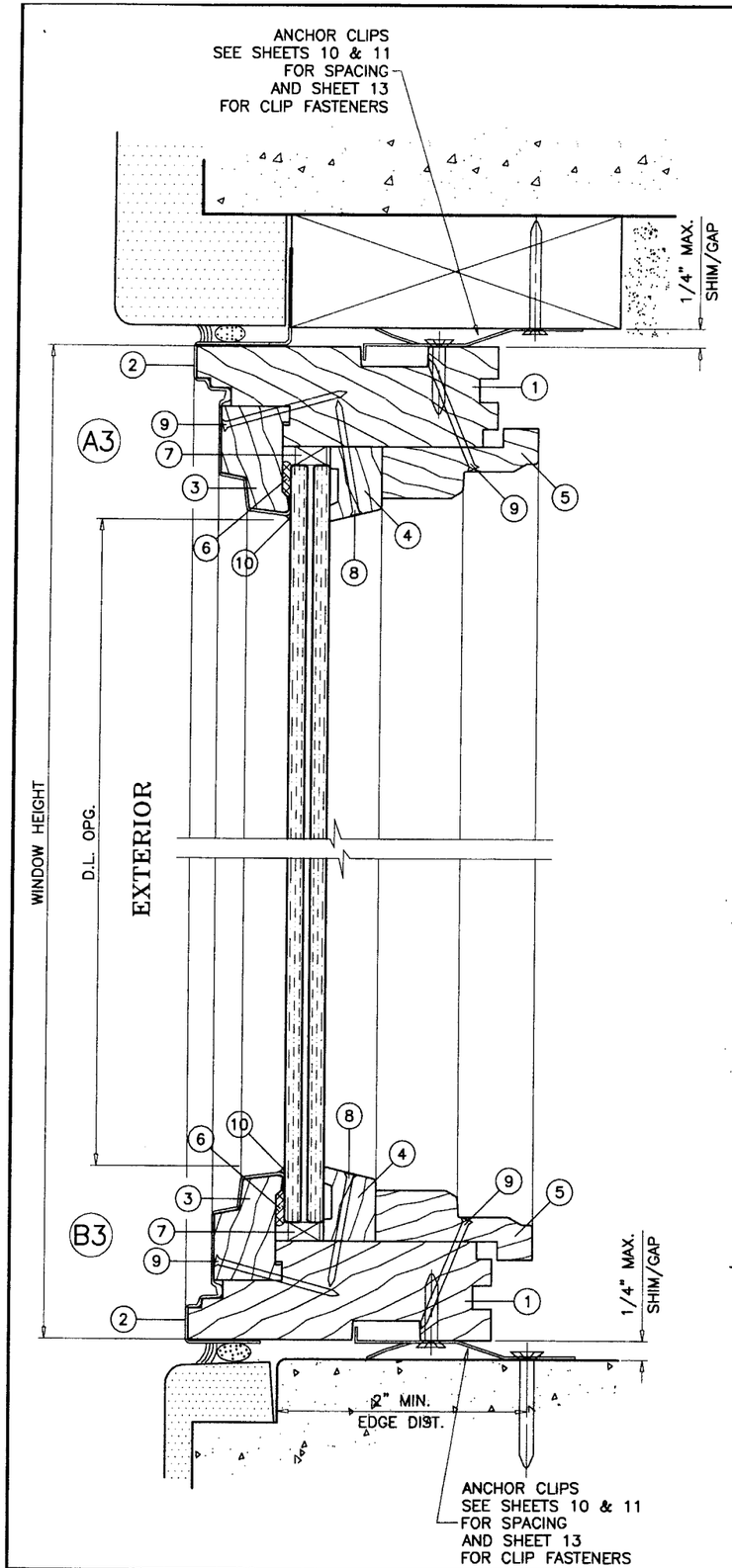

WOOD BUCKS NOT BY ANDERSEN, MUST SUSTAIN LOADS IMPOSED BY GLAZING SYSTEM AND TRANSFER THEM TO THE BUILDING STRUCTURE.

TYPICAL ANCHORS

ANCHORS THRU INSTALLATION CLIPS

A: #8 SMS

INTO 2BY WOOD BUCKS OR WOOD STRUCTURE
1-1/2" MIN. PENETRATION INTO WOOD

B: 1/4" DIA. TAPCONS

INTO 2BY WOOD BUCKS OR WOOD STRUCTURE
1-1/2" MIN. PENETRATION INTO WOOD

THRU WOOD BUCKS INTO MASONRY OR DIRECTLY INTO MASONRY
1-1/4" MIN. EMBED INTO CONC. OR MASONRY

TYPICAL EDGE DISTANCE

INTO CONCRETE AND MASONRY = 2" MIN.
INTO WOOD STRUCTURE = 3/4" MIN.

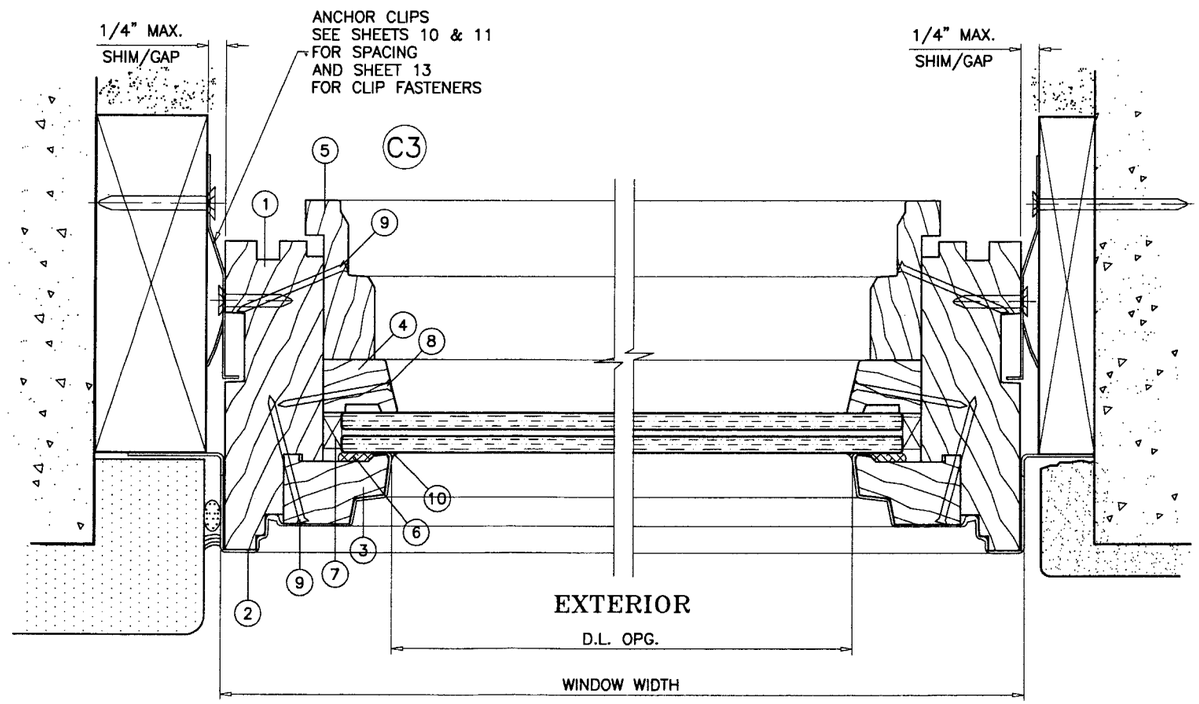

WINDOW DESCRIPTION
CTR1510
CTR1810
CTR2010
CTR2410
CTR2810
CTR3010
CTR2910
CTR3410
CTR4010
CTR4810
CTR5210
CTR51110
CTR6010
CTR7010

WINDOW DESCRIPTION
PTR3010
PTR3510
PTR4010
PTR4510
PTR5010
PTR5510
PTR6010
P3030
P3530
P4030
P4530
P5030
P5530
P6030
P3035
P3535
P4035
P4535
P5035
P5535
P6035
P3040
P3540
P4040
P4540
P5040
P5540
P6040
P3045
P3545
P4045
P4545
P5045
P5545
P6045
P3050
P3550
P4050
P4550
P5050
P5550
P6050
P3055
P3555
P4055
P4555
P5055
P3060
P3560
P4060
P4560
P5060

Engr: DR. HUMAYOUN FAROOQ
STRUCTURES
FLA. PE # 16557
C.A.N. 3538

NOV 0 5 2007

PRODUCT RENEWED
as complying with the Florida
Building Code
Acceptance No 07-0820.10
Expiration Date 11/05/2012
By
Miami-Dade Product Control
Division

AL-FAROOQ CORPORATION
ENGINEERS & PRODUCT DEVELOPMENT
1235 S.W. 87 AVE
MIAMI, FLORIDA 33174
TEL. (305) 264-8100 FAX. (305) 262-6978

COMP-ANL\W05-36AC

VINYL CLAD DIRECT SET FIXED WOOD WDW. (L.M.I.)

ANDERSEN CORPORATION
100 FOURTH AVE. NORTH
BAYPORT, MN. 55003-1096
TEL. (800) 426-7691 FAX (-)

revisions:

no	date	by	description
A	10.08.07		REV. PER BCCO COMMENTS

date: 07-22-05
scale: 1/2" = 1"
dr. by: HAMID
chk. by:

drawing no.
W05-36

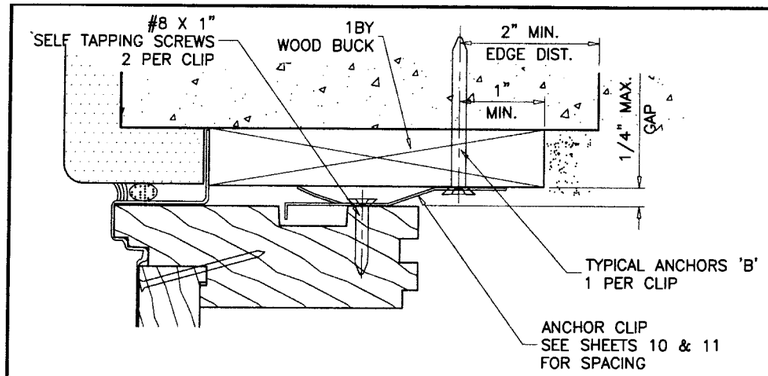

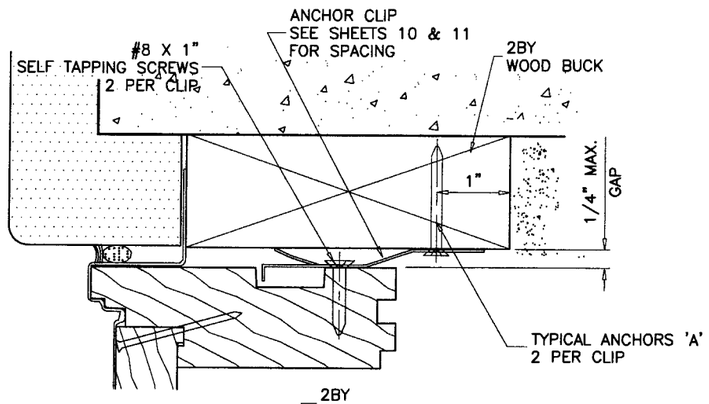

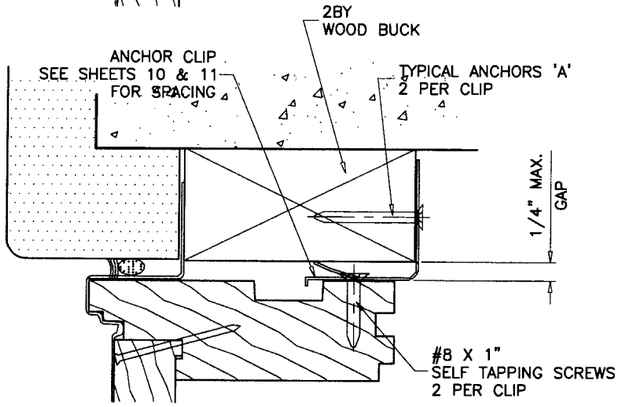

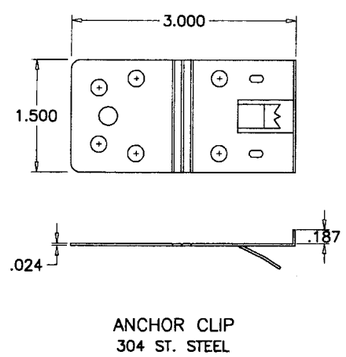

ANCHOR CLIP
304 ST. STEEL

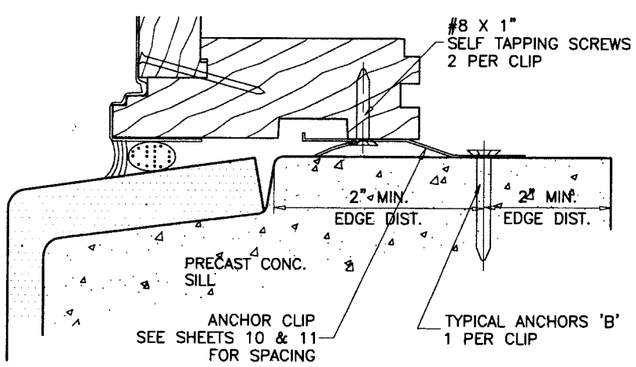

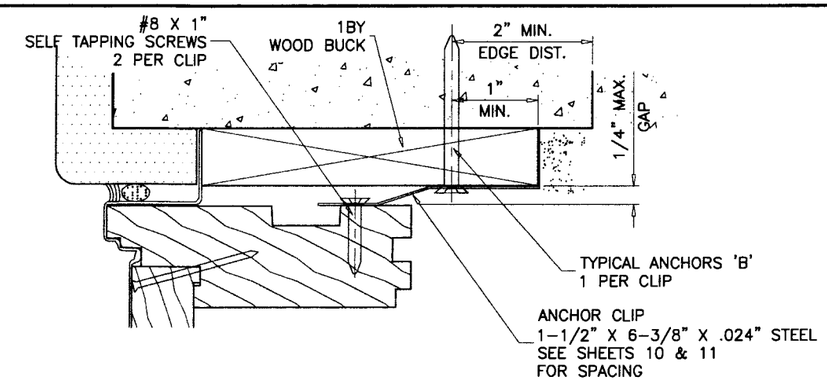

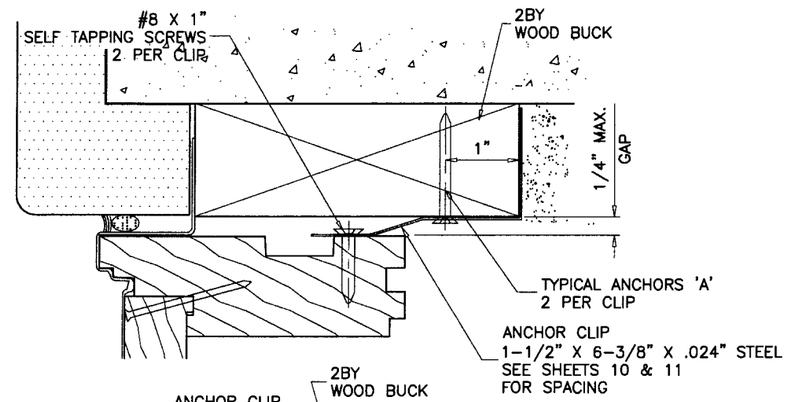

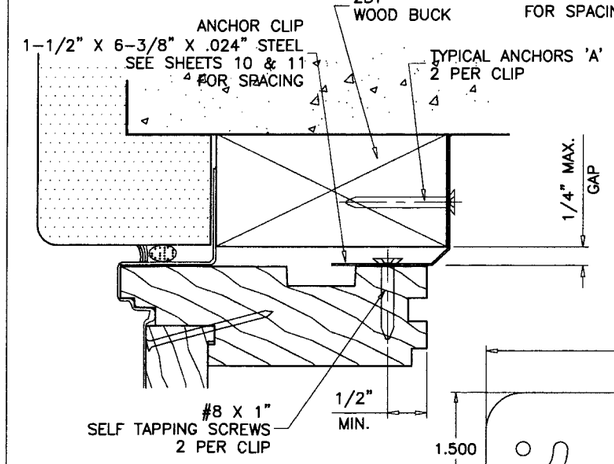

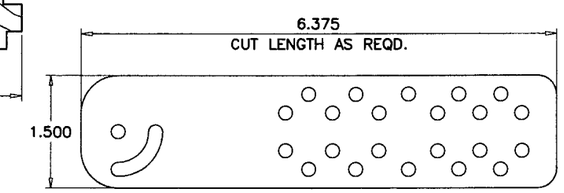

ANCHOR CLIP
304 ST. STEEL

WINDOW DESCRIPTION
CTR1510
CTR1810
CTR2010
CTR2410
CTR2810
CTR3010
CTR2910
CTR3410
CTR4010
CTR4810
CTR5210
CTR51110
CTR6010
CTR7010

WINDOW DESCRIPTION
PTR3010
PTR3510
PTR4010
PTR4510
PTR5010
PTR5510
PTR6010
P3030
P3530
P4030
P4530
P5030
P5530
P6030
P3035
P3535
P4035
P4535
P5035
P5535
P6035
P3040
P3540
P4040
P4540
P5040
P5540
P6040
P3045
P3545
P4045
P4545
P5045
P5545
P6045
P3050
P3550
P4050
P4550
P5050
P5550
P6050
P3055
P3555
P4055
P4555
P5055
P3060
P3560
P4060
P4560
P5060

Engr: DR. HUMAYOUN FAROOQ
STRUCTURES
FLA. PE # 16557
C.A.N. 3538

NOV 0 5 2007

PRODUCT RENEWED
as complying with the Florida
Building Code
Acceptance No 07-0820.10
Expiration Date 11/05/2012
By
Miami Dade Product Control
Division

CLIP INSTALLATION DETAILS

AL-FAROOQ CORPORATION
ENGINEERS & PRODUCT DEVELOPMENT
1235 S.W. 87 AVE
MIAMI, FLORIDA 33174
TEL. (305) 264-8100 FAX. (305) 262-6978

COMP-ANL\W05-36AC

VINYL CLAD DIRECT SET FIXED WOOD WDW. (L.M.I.)

ANDERSEN CORPORATION
100 FOURTH AVE. NORTH
BAYPORT, MN. 55003-1096
TEL. (800) 426-7691 FAX (-)

revisions:

no	date	by	description
A	10.08.07		REV. PER BCCO COMMENTS

date: 07-22-05
scale: 1/2" = 1"
dr. by: HAMID
chk. by:

drawing no.
W05-36

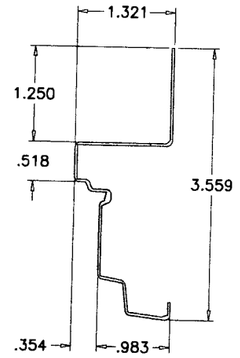

(2) VINYL CLADDING HEAD/JAMB/SILL

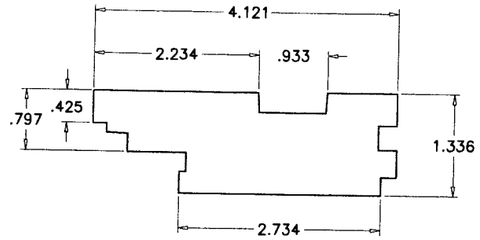

(1) FRAME HEAD/JAMB/SILL

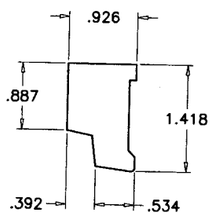

(3) EXTERIOR GLASS STOP (HEAD/JAMB/SILL)

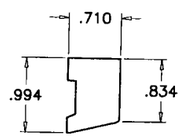

(4) INTERIOR GLASS STOP (HEAD/JAMB/SILL)

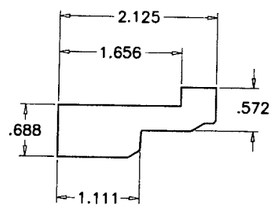

(5) INTERIOR STOP (HEAD/JAMB/SILL)

ITEM #	PART NO.	REQD.	DESCRIPTION	MATERIAL	MANF./SUPPLIER/REMARKS
1	30394	AS REQD.	FRAME HEAD/JAMB/SILL	WOOD	ANDERSEN
2	30377	AS REQD.	FRAME COVER (HEAD/JAMB/SILL)	VINYL	–
3	30395	AS REQD.	EXTERIOR GLASS STOP (HEAD/JAMB/SILL)	WOOD	ANDERSEN
4	30397	AS REQD.	INTERIOR GLASS STOP (HEAD/JAMB/SILL)	WOOD	ANDERSEN
5	30666/30667	AS REQD.	INTERIOR STOP (HEAD/JAMB/SILL)	WOOD	ANDERSEN
6	–	AS REQD.	GLAZING COMPOUND	SILICONE	DOW
7	20065	AS REQD.	SETTING BLOCK SPACER	PVC	–
8	27255	–	GALVANIZED NAILS AT 7" O.C.	–	16 GA. X 1–3/4"
9	27255	–	GALVANIZED NAILS AT 7" O.C.	–	16 GA. X 1–1/2"
10	–	AS REQD.	FILLET BEAD	SILICONE	DOW OR GE

PROFILES COMPOSED OF YELLOW PINE, PONDEROSA PINE OR EQUAL.

WINDOW DESCRIPTION
PTR3010
PTR3510
PTR4010
PTR4510
PTR5010
PTR5510
PTR6010
P3030
P3530
P4030
P4530
P5030
P5530
P6030
P3035
P3535
P4035
P4535
P5035
P5535
P6035
P3040
P3540
P4040
P4540
P5040
P5540
P6040
P3045
P3545
P4045
P4545
P5045
P5545
P6045
P3050
P3550
P4050
P4550
P5050
P5550
P6050
P3055
P3555
P4055
P4555
P5055
P3060
P3560
P4060
P4560
P5060

WINDOW DESCRIPTION
CTR1510
CTR1810
CTR2010
CTR2410
CTR2810
CTR3010
CTR2910
CTR3410
CTR4010
CTR4810
CTR5210
CTR51110
CTR6010
CTR7010

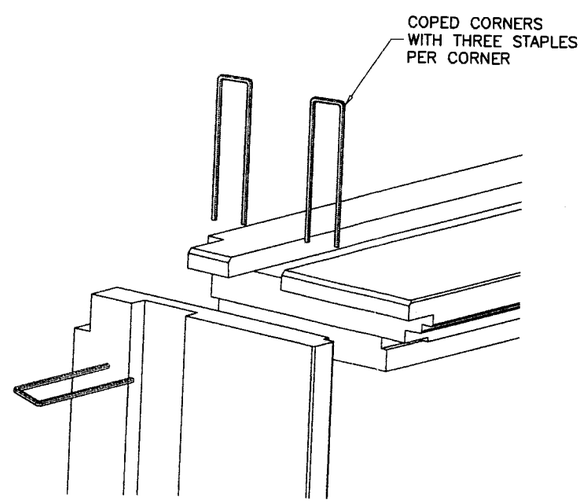

FRAME CORNERS

Engr: DR. HUMAYOUN FAROOQ
STRUCTURES
FLA. PE # 16557
C.A.N. 3538

NOV 0 5 2007

PRODUCT RENEWED
as complying with the Florida
Building Code
Acceptance No 07-0820.10
Expiration Date 11/05/2012
By
Miami-Dade Product Control
Division

AL-FAROOQ CORPORATION
ENGINEERS & PRODUCT DEVELOPMENT
1235 S.W. 87 AVE
MIAMI, FLORIDA 33174
TEL. (305) 264-8100 FAX. (305) 262-6978
COMP–ANL\W05–36AC

VINYL CLAD DIRECT SET FIXED WOOD WDW. (L.M.I.)

ANDERSEN CORPORATION
100 FOURTH AVE. NORTH
BAYPORT, MN. 55003–1096
TEL. (800) 426–7691 FAX (–)

revisions:

no	date	by	description
A	10.08.07		REV. PER BCCO COMMENTS

date: 07–22–05
scale: 1/2" = 1"
dr. by: HAMID
chk. by:

drawing no.
W05–36

sheet 14 of 14