MIAMI-DADE COUNTY

BUILDING CODE COMPLIANCE OFFICE (BCCO)
PRODUCT CONTROL DIVISION

MIAMI-DADE COUNTY, FLORIDA
METRO-DADE FLAGLER BUILDING
140 WEST FLAGLER STREET, SUITE 1603
MIAMI, FLORIDA 33130-1563
(305) 375-2901 FAX (305) 375-2908
www.miamidade.gov/buldingcode

NOTICE OF ACCEPTANCE (NOA)

Nebraska Plastics, Inc.
PO Box 45
Cozad, NE 69130

SCOPE:

This NOA is being issued under the applicable rules and regulations governing the use of construction materials. The documentation submitted has been reviewed by Miami-Dade County Product Control Division and accepted by the Board of Rules and Appeals (BORA) to be used in Miami Dade County and other areas where allowed by the Authority Having Jurisdiction (AHJ).

This NOA shall not be valid after the expiration date stated below. The Miami-Dade County Product Control Division (In Miami Dade County) and/or the AHJ (in areas other than Miami Dade County) reserve the right to have this product or material tested for quality assurance purposes. If this product or material fails to perform in the accepted manner, the manufacturer will incur the expense of such testing and the AHJ may immediately revoke, modify, or suspend the use of such product or material within their jurisdiction. BORA reserves the right to revoke this acceptance, if it is determined by Miami-Dade County Product Control Division that this product or material fails to meet the requirements of the applicable building code.

This product is approved as described herein, and has been designed to comply with the Florida Building Code, including the High Velocity Hurricane Zone.

DESCRIPTION: Country Estate Fence for HVHZ.

APPROVAL DOCUMENT: Drawing No. **NP 1270/75**, titled "Lakeland/Lakeland II, Hollingsworth II/IIA, Lakeview, Melbourne", sheets 1 through 6 of 6, dated from 02/21/07 to 04/13/07, with no revision, prepared by Nebraska Plastics, Inc., signed and sealed by Richard Boyette, P.E., bearing the Miami-Dade County Product Control Approval stamp with the Notice of Acceptance number and approval date by the Miami-Dade County Product Control Division.

MISSILE IMPACT RATING: None

LABELING: Each unit shall bear a permanent label with the manufacturer's name or logo, city, state and following statement: "Miami-Dade County Product Control Approved", unless otherwise noted herein.

RENEWAL of this NOA shall be considered after a renewal application has been filed and there has been no change in the applicable building code negatively affecting the performance of this product.

TERMINATION of this NOA will occur after the expiration date or if there has been a revision or change in the materials, use, and/or manufacture of the product or process. Misuse of this NOA as an endorsement of any product, for sales, advertising or any other purposes shall automatically terminate this NOA. Failure to comply with any section of this NOA shall be cause for termination and removal of NOA.

ADVERTISEMENT: The NOA number preceded by the words Miami-Dade County, Florida, and followed by the expiration date may be displayed in advertising literature. If any portion of the NOA is displayed, then it shall be done in its entirety.

INSPECTION: A copy of this entire NOA shall be provided to the user by the manufacturer or its distributors and shall be available for inspection at the job site at the request of the Building Official.

This NOA consists of this page 1, evidence page E-1, as well as approval document mentioned above.

The submitted documentation was reviewed by **Carlos M. Utrera, P.E.**

PRODUCT CONTROL ACCEPTED

11/7/07

Nebraska Plastics, Inc.

NOTICE OF ACCEPTANCE: EVIDENCE SUBMITTED

A. DRAWINGS

1. Drawing No. **NP 1270/75**, titled "Lakeland/Lakeland II, Hollingsworth II/IIA, Lakeview, Melbourne", sheets 1 through 6 of 6, dated from 02/21/07 to 04/13/07, with no revision, prepared by Nebraska Plastics, Inc., signed and sealed by Richard Boyette, P.E.

B. TESTS

1. Test reports on 1) Dynamic Wind Load Testing,
   2) Static Load Post Testing,
   3) Artificial Outdoor Exposure per ASTM G 155-05a,
   4) Tensile Testing per ASTM D 638-03,
   5) Rate of Burning per ASTM D 635-06,
   6) Smoke Density per ASTM D 2843-99,
   7) Self Ignition Temperature per ASTM 1929-96,

   along with marked-up drawings and installation diagram of a 6' high PVC fence system, prepared by Architectural Testing, Inc., Report No. **67645.01-119-18**, dated 06/21/07, signed and sealed by Joseph A. Reed, P.E.

C. CALCULATIONS

1. Fence foundation calculations, dated 10/22/07, prepared, signed and sealed by Richard Boyette, P.E.

D. QUALITY ASSURANCE

1. Miami Dade Building Code Compliance Office (BCCO).

E. MATERIAL CERTIFICATIONS

1. None.

F. STATEMENTS

1. Statement letter of code conformance, dated 07/23/07, signed and sealed by Richard Boyette, P.E.
2. Statement letter of no financial interest, dated 07/23/07, signed and sealed by Richard Boyette, P.E.
3. Laboratory code compliance letter for Test Report No. **67645.01-119-18**, issued by Architectural Testing, Inc., dated 06/21/07, signed and sealed by Joseph A. Reed, P.E.

11/7/07

Carlos M. Utrera, P.E.
Product Control Examiner
NOA No 07-0820.11
Expiration Date: November 29, 2012
Approval Date: November 29, 2007

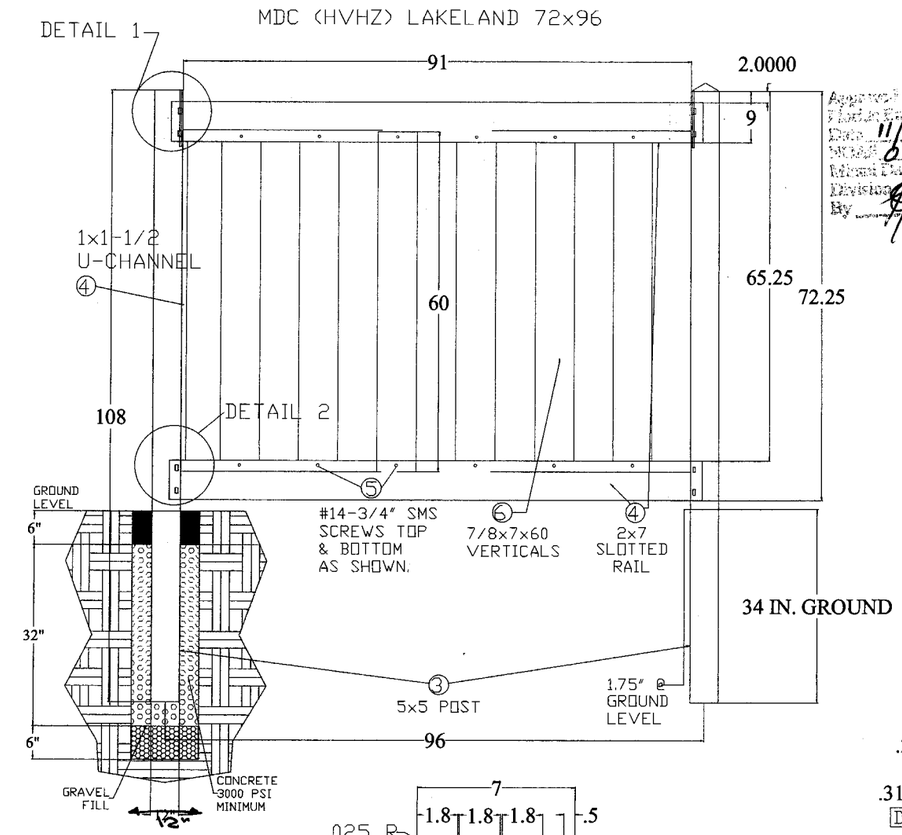

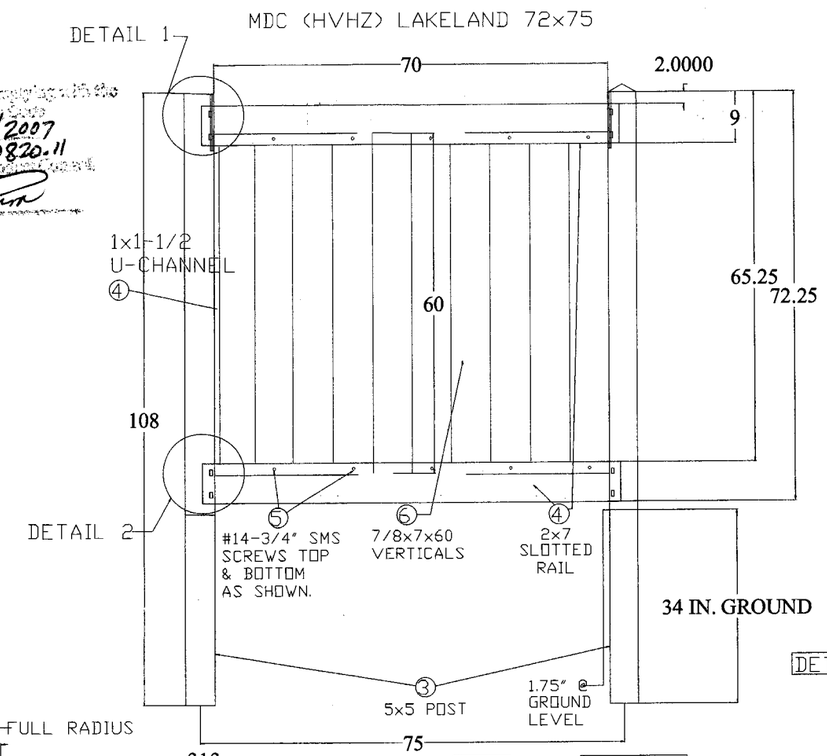

Approved as complying with the Florida Building Code
Date: 11/29/2007
07-0820.11
Division
By

Note: This drawing contains details for fence that will be installed on a High Velocity Hurricane Zone (HVHZ).

Note: This fence system is designed to withstand a 75 mph sustained wind and a 90 mph wind gust for 3 seconds in compliance with section 1612.2.1 of the Florida building code.

Note: For use in HVHZ only. Use (12-#14x3/4" screws for the 8' fence section and 10-#14x3/4" screws for the 6'3" fence section) screwed directly through the 2x3.5 rail and the 2x7 rail into the 60" board 1/2" from the opening of the top and bottom rail as shown on the drawing

RICHARD BOYETTE
FL PE # 42485
4031 COCONUT BLVD
ROYAL PALM BCH FL 33411
561-790-5766

APPROVED OCT 25 2007

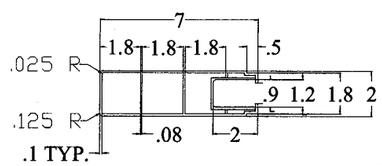

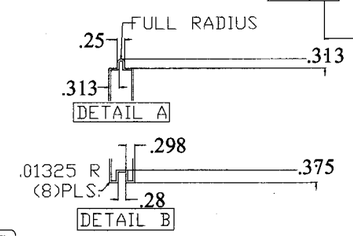

1/2" x 8" dowel inserted through pre-drilled hole 2" from each end of top horizontal. 4 notches on each end of each horizontal top and bottom.

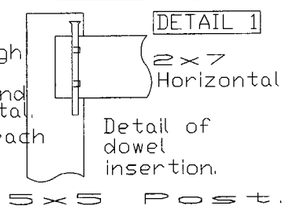

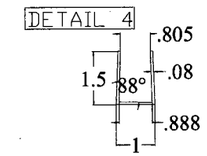

1 x 1.5 U-Channel 56.25"
(1 per section)

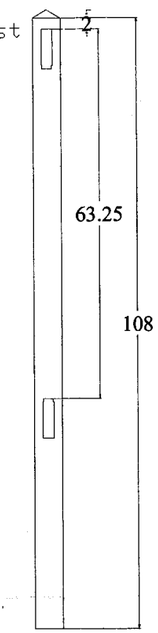

2x7 Slotted T&B rail
With 7/8x7 vertical
inserted

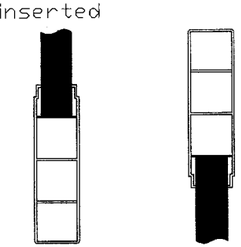

DETAIL 1 & 2

95" HORIZONTAL FOR 8' SECTION (13 VERTICALS)

SLOT OPENING .9

DETAIL 2

74" HORIZONTAL FOR 6' SECTION
(10 VERTICALS)

SLOT OPENING .9

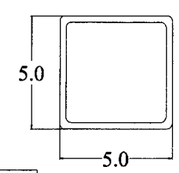

DETAIL 3
5x5 Post Cross Section
Heavy Wall Post .280 Wall
Thickness (8' Center)
D-Post .170-.205 Wall
Thickness (6'-3" Center)

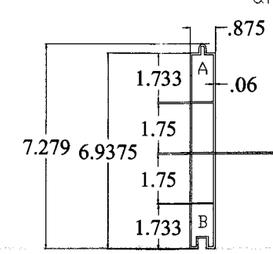

6.9375" T&G CROSS SECTION
NOTE: T&G PANEL 64"LONG.

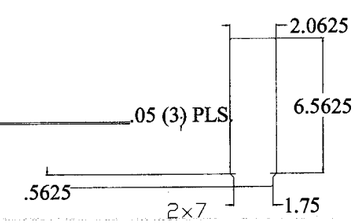

2x7
Routing
Dimensions

NEBRASKA PLASTICS, INC
COZAD - NE.

PVC Material Specifications:		
Description	Test	Properties
Rate of Burning	ASTM D 635	Class CC1
Self Ignition Temperature (Flash Ignition)	ASTM D 1929	741°F>650°F
Self Ignition Termperature (Spontaneous Ignition)	ASTM D 1929	858°F>650°F
Average Smoke Density Rating	ASTM D 2843	65.8<75
Tensile Strength (Differnece Exposed and Unexposed)	ASTM D 638	+2%<+10%

	Description: (MDC) LAKELAND	
Tolerance	Dwg. #: NP 1270	Date: 04/01/07
(Unless Noted)	Sheet #: 1 of 6	Drawn By: Jay Ice
Frctns ±1/32	Scale: None	Revision: 2
Decimals ±.031	Part #: Refer To Drawing	
Angles ±1°	Prod. Lne: PF	Approved By: LLS
	Material: P.V.C.	

MDC (HVHZ) HOLLINGSWORTH II 72x96

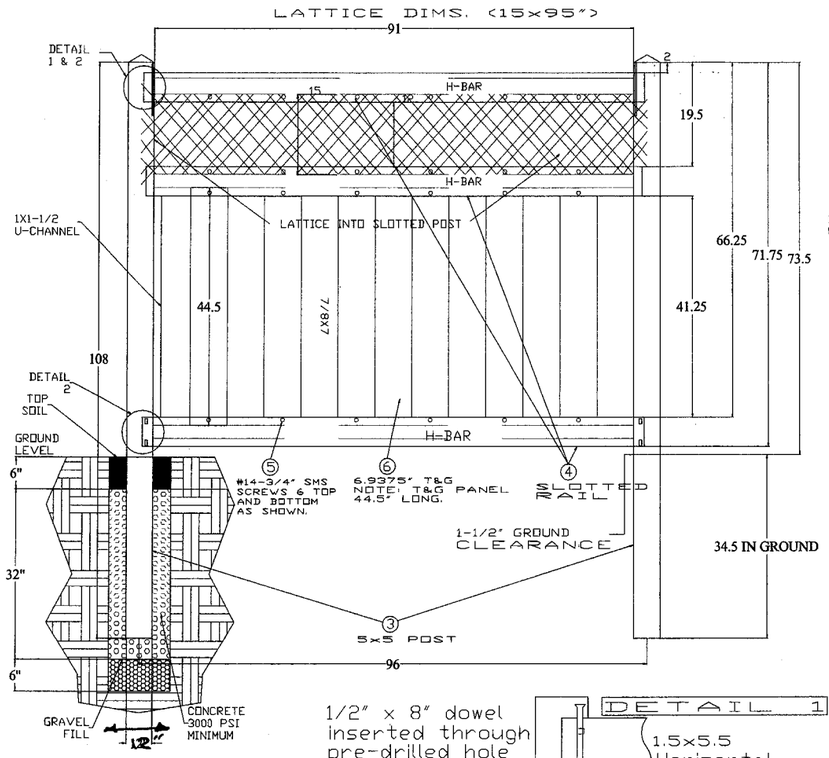

MDC (HVHZ) HOLLINGSWORTH II 72x75

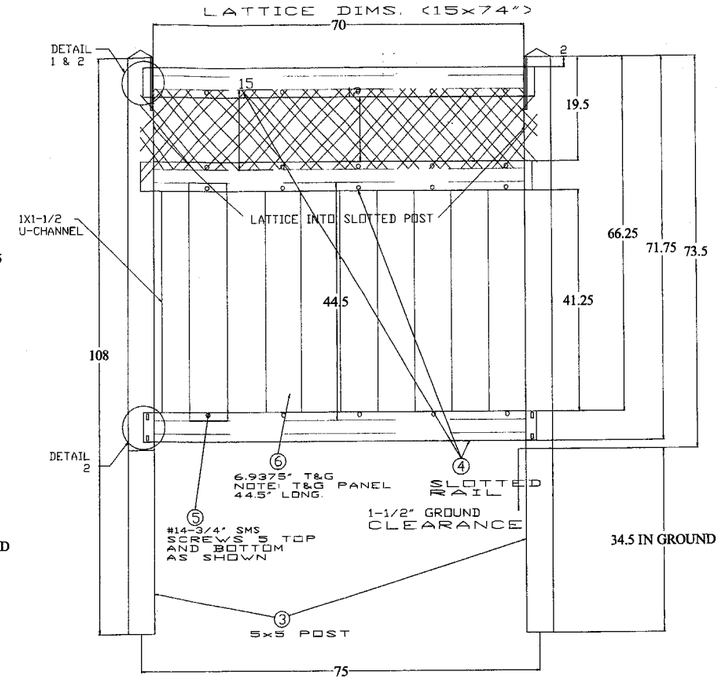

Note: This drawing contains details for fence that will be installed on a High Velocity Hurricane Zone (HVHZ).

Note: This fence system is designed to withstand a 75 mph sustained wind and a 90 mph wind gust for 3 seconds in compliance with section 1612.2.1 of the Florida building code.

Note: For use in HVHZ only. Use (28-#14x3/4" screws for the 8' fence section and 20-#14x3/4" screws for the 6' 3" fence section) screwed directly through the 1.5x5.5 rail and into the .875x7 vertical approx. 1/2" from the opening of the top and bottom rail as shown on the drawing.

RICHARD BOYETTE
FL PE # 42485
4031 COCONUT BLVD
ROYAL PALM BCH FL 33411
561-790-5766

APPROVED OCT 25 2007

1/2" x 8" dowel inserted through pre-drilled hole 2" from each end of top horizontal. 4 notches on each end of each horizontal top and bottom.

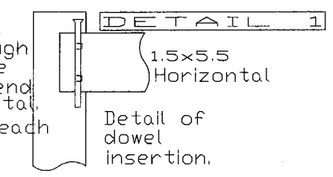

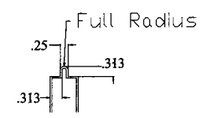

DETAIL A

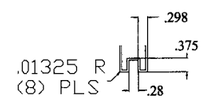

DETAIL B

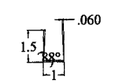

1x1.5 U-Channel 41.5" (1 per section)

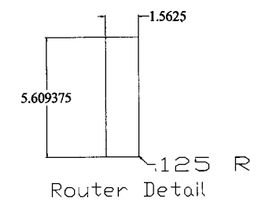

Router Detail

TOP, MID. & BOTTOM RAIL

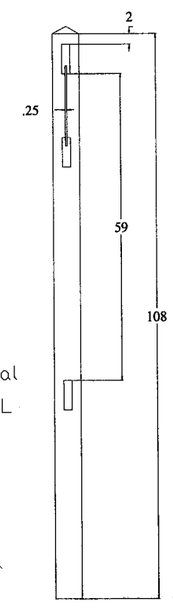

5x5 Post

Approved as complying with the Florida Building Code
Date 11/29/2007
NOA# 07-0820.11
Miami Dade Product Control Division
By

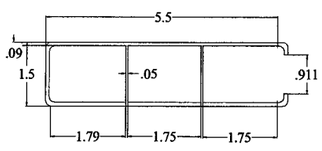

Slotted Rail Cross Section

NOTE: Two notches per side at each end. (8 total per rail). The rails are inserted into routed holes on each post held by notches punched into each rail.

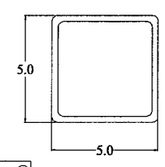

DETAIL 3

5x5 Post Cross Section
Heavy Wall Post .280 Wall Thickness (8' Center)
D-Post .170-.205 Wall Thickness (6'-3" Center)

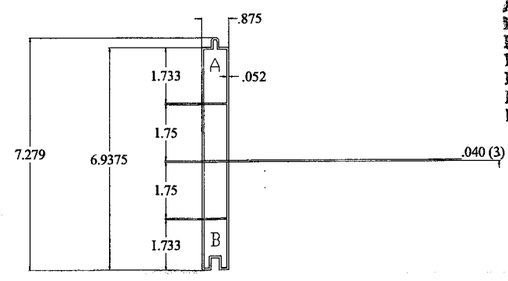

6.9375" T&G CROSS SECTION
NOTE: T&G PANEL 44" LONG.

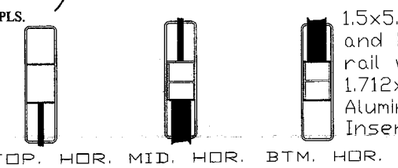

DETAIL 2

1.5x5.5 Mid. and bottom rail with 1.712x1.26x.065 Aluminum H-Bar Insert.

NEBRASKA PLASTICS, INC
COZAD - NE.

PVC Material Specifications:

Description	Test	Properties
Rate of Burning	ASTM D 635	Class CC1
Self Ignition Temperature (Flash Ignition)	ASTM D 1929	741°F>650°F
Self Ignition Termperature (Spontaneous Ignition)	ASTM D 1929	858°F>650°F
Average Smoke Density Rating	ASTM D 2843	65.8<75
Tensile Strength (Differnece Exposed and Unexposed)	ASTM D 638	+2%<+10%

	Description: (MDC) HOLLINGSWORTH II			
Tolerance	Dwg. #:	NP 1271	Date:	04/13/07
(Unless Noted)	Sheet #:	2 of 6	Drawn By:	Jay Ice
Fractions ±1/32	Scale:	None	Revision:	1
Decimals ±.031	Part #: Refer To Drawing			
Angles ±1°	Prod. Lne:	PF	Approved By:	LLS
	Material:	P.V.C.		

MDC (HVHZ) HOLLINGSWORTH IIA 72x96
LATTICE DIMENSIONS (13.5" X 95")

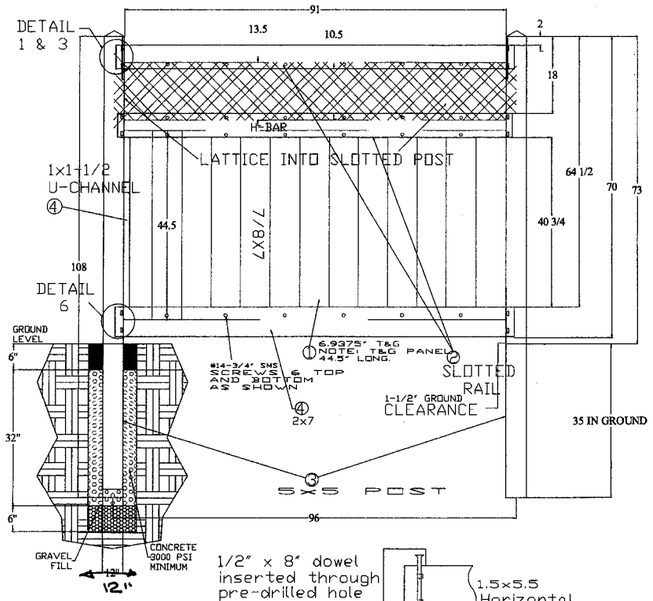

1/2" x 8" dowel inserted through pre-drilled hole 2" from each end of top horizontal.
4 notches on each end of each horizontal top and bottom.

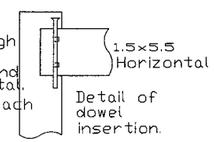

Detail of dowel insertion.

5 X 5 POST
DETAIL 1

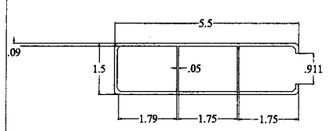

Slotted Rail Cross Section

NOTE: Two notches per side at each end (8 total per rail). The rails are inserted into routed holes on each post held by notches punched into each rail.

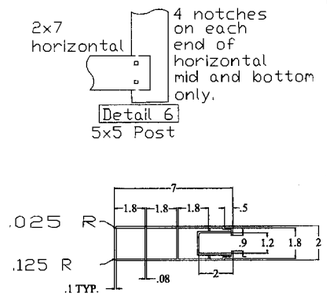

74" HORIZONTAL FOR 6-3' SECTION
Slot Opening .90

95" HORIZONTAL FOR 8' SECTION
Slot Opening .90

DETAIL 2

MDC (HVHZ) HOLLINGSWORTH IIA 72x75
LATTICE DIMENSIONS (13.5" X 74")

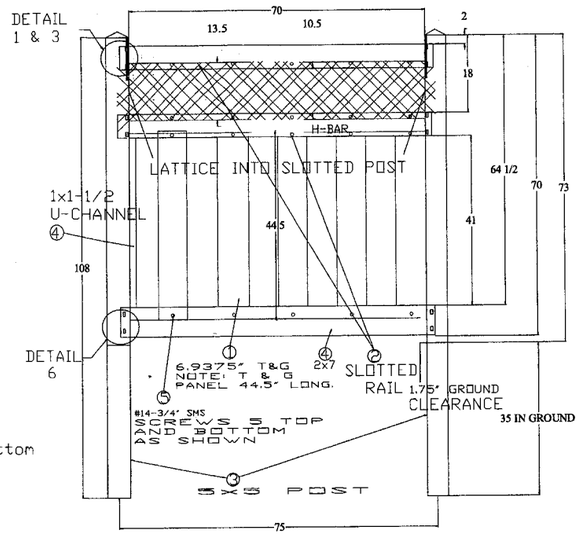

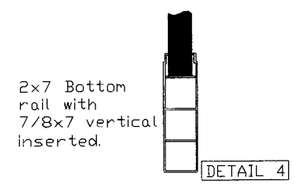

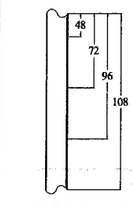

5x5 D-Post Cross Section
.170-.205 Wall Thickness (6'-3' Center)
(Use Same Post Hole Routings As The 5x5 Heavy Wall Post)

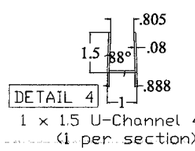

DETAIL 4
1 x 1.5 U-Channel 41.5"
(1 per section)

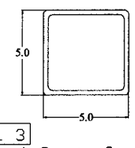

DETAIL 3
5x5 Post Cross Section
Heavy Wall Post .280 Wall Thickness (8' Center)
D-Post .170-.205 Wall Thickness (6'-3" Center)

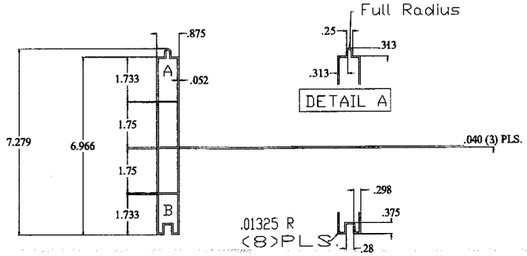

6.966" T&G CROSS SECTION
NOTE:T&G PANEL 44.5" LONG.

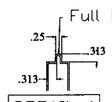

DETAIL A

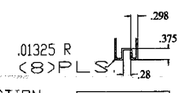

DETAIL B

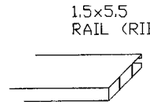

1.5x5.5
RAIL (RIBBED)

TOP & MIDDLE RAIL

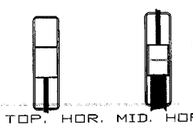

TOP. HOR. MID. HOR.

1.5x5.5 Top & Middle Rail with 1.712x1.26x.065 Aluminum H-Bar Insert. (Middle Only)

DETAIL 2

Note: This drawing contains details for fence that will be installed on a High Velocity Hurricane Zone (HVHZ).

Note: This fence system is designed to withstand a 75 mph sustained wind and a 90 mph wind gust for 3 seconds in compliance with section 1612.2.1 of the Florida building code.

Note: For use in HVHZ only. Use (28-#14x3/4" screws for the 8' fence section and 20-#14x3/4" screws for the 6' 3" fence section) screwed directly through the 1.5x5.5 & 2x7 rail & Lattice into the 7/8x7 vertical approx. 1/2" from the opening of the top and bottom rail as shown on the drawing.

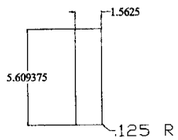

1.5x5.,5 Routing Dimensions

2x7 Routing Dimensions

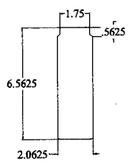

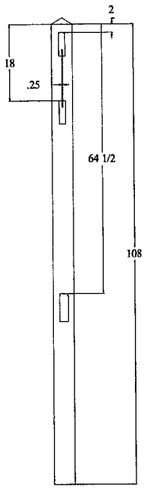

5x5 Post

RICHARD BOYETTE
FL PE # 42485
4031 COCONUT BLVD
ROYAL PALM BCH FL 33411
561-790-5766

APPROVED OCT 25 2007

Approved as complying with the Florida Building Code
Date 11/29/2007
NOA# 07-0820.11
Miami Dade Product Control Division
By

NP
NEBRASKA PLASTICS, INC
COZAD · NE

PVC Material Specifications:

Description	Test	Properties
Rate of Burning	ASTM D 635	Class CC1
Self Ignition Temperature (Flash Ignition)	ASTM D 1929	741°F>650°F
Self Ignition Termperature (Spontaneous Ignition)	ASTM D 1929	858°F>650°F
Average Smoke Density Rating	ASTM D 2843	65.8<75
Tensile Strength (Differnece Exposed and Unexposed)	ASTM D 638	+2%<+10%

	Description:	(MDC) HOLLINGSWORTH IIA	
Tolerance	Dwg. #:	NP 1272	Date: 03/30/07
(Unless Noted)	Sheet #:	3 of 6	Drawn By: Jay Ice
Fractions ±1/32	Scale:	None	Revision: 1
Decimals ±.031	Part #:	Refer To Drawing	
Angles ±1°	Prod. Lne:	PF	Approved By: LLS
	Material:	P.V.C.	

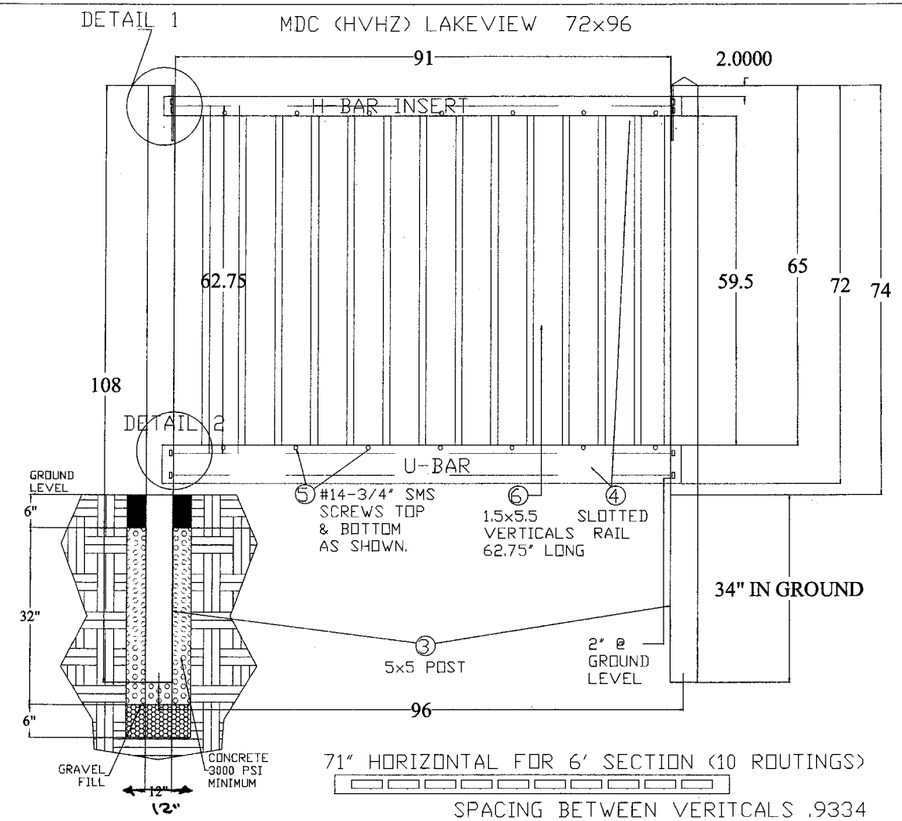

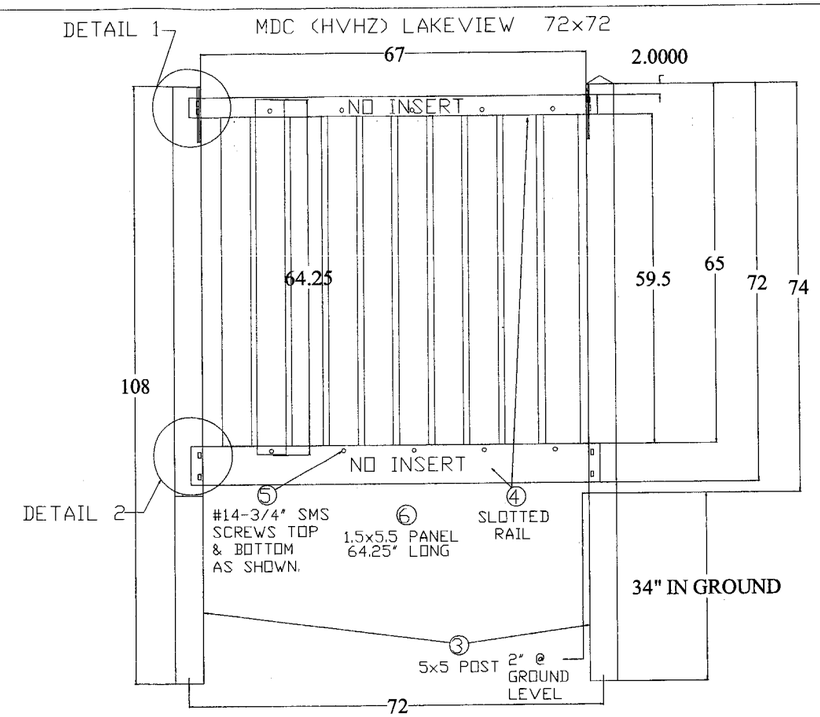

Note: This drawing contains details for fence that will be installed on a High Velocity Hurricane Zone (HVHZ).

Note: This fence system is designed to withstand a 75 mph sustained wind and a 90 mph wind gust for 3 seconds in compliance with section 1612.2.1 of the Florida building code.

Note: For use in HVHZ only Use (14-#14x3/4" screws for the 8' fence section and 10-#14x3/4" screws for the 6' fence section) screwed directly through the 2x3.5 rail and the 2x7 rail into the 1.5x5.5 1/2" from the opening of the top and bottom rail as shown on the drawing

RICHARD BOYETTE
FL PE # 42485
4031 COCONUT BLVD
ROYAL PALM BCH FL 33411
561-790-5766

APPROVED OCT 25 2007

71" HORIZONTAL FOR 6' SECTION (10 ROUTINGS)

SPACING BETWEEN VERITCALS .9334

95" HORIZONTAL FOR 8' SECTION (14 ROUTINGS)

DETAIL 2

ROUTED HOLE 1.5625x5.609375 (BOTH RAILS) SPACING BETWEEN VERITCALS 1.09

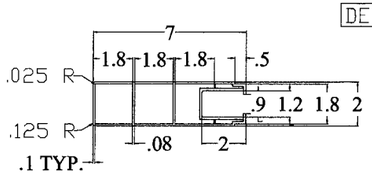

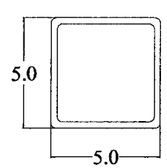

DETAIL 3

5x5 Post Cross Section Heavy Wall Post .280 Wall Thickness (8' Center). D-Post .170-.205 Wall Thickness (6'3" Center)

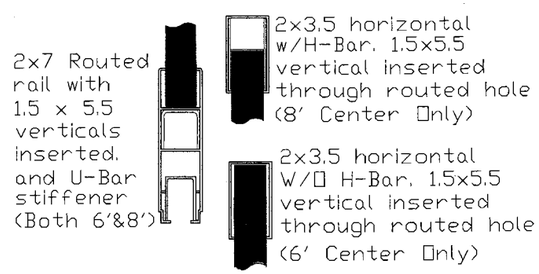

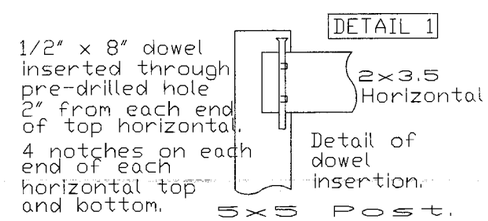

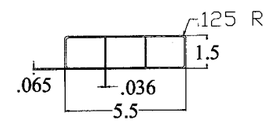

1.5x5.5 RESIDENTIAL RAIL (RIBBED)

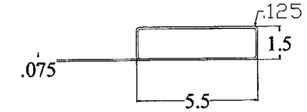

1.5x5.5 RESIDENTIAL RAIL (HOLLOW)

Approved as complying with the Florida Building Code
Date 11/29/2007
NOA# 07-0820.11
Miami-Dade Product Control Division
By

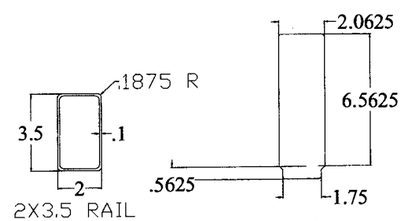

2X3.5 RAIL CROSS SECTION

2x7 Routing Dimensions

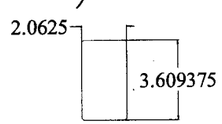

2X3.5 Routing dimensions

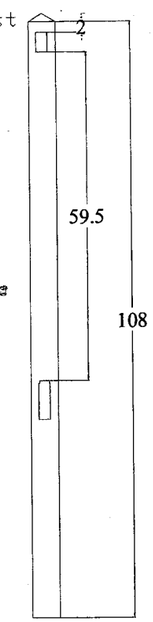

NEBRASKA PLASTICS, INC
COZAD - NE.

PVC Material Specifications:		
Description	Test	Properties
Rate of Burning	ASTM D 635	Class CC1
Self Ignition Temperature (Flash Ignition)	ASTM D 1929	741°F>650°F
Self Ignition Termperature (Spontaneous Ignition)	ASTM D 1929	858°F>650°F
Average Smoke Density Rating	ASTM D 2843	65.8<75
Tensile Strength (Differnece Exposed and Unexposed)	ASTM D 638	+2%<+10%

	Description:	(MDC) LAKEVIEW	
Tolerance	Dwg. #: NP 1273	Date: 04/10/07	
(Unless Noted)	Sht. #: 4 of 6	Drawn By: Jay Ice	
Frctns. ±1/32	Scale: None	Revision: 1	
Decimals ±.031	Part #:	Refer To Drawing	
Angles ±1°	Prod. Lne: PF	Approved By: LLS	
	Material:	P.V.C.	

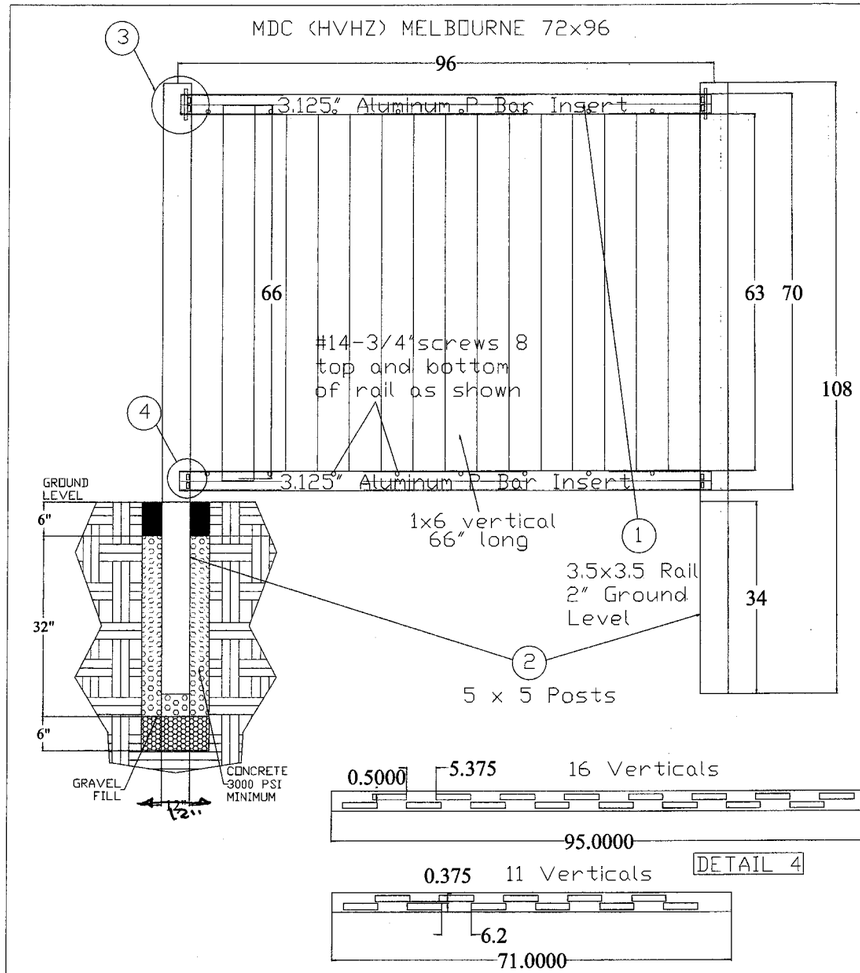

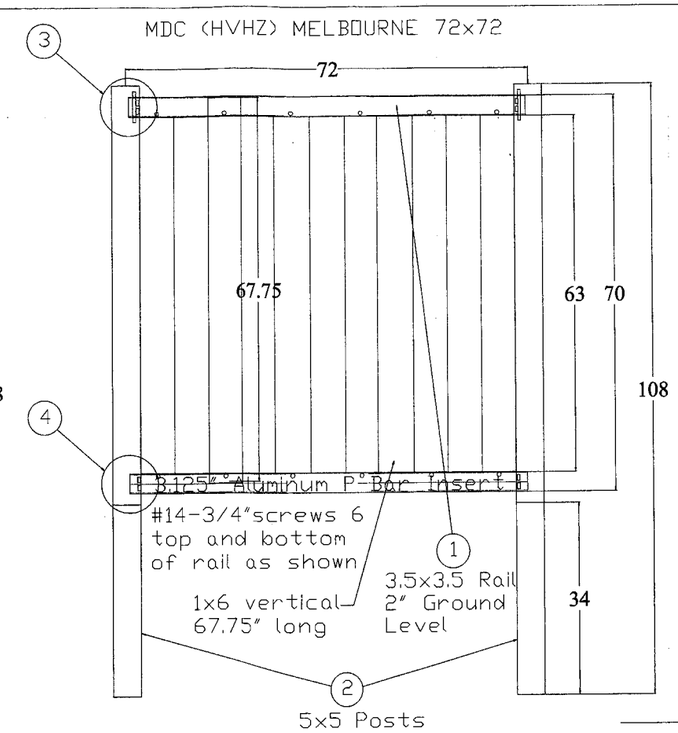

Note: This drawing contains details for fence that will be installed on a High Velocity Hurricane Zone (HVHZ).

Note: This fence system is designed to withstand a 75 mph sustained wind and a 90 mph wind gust for 3 seconds in compliance with section 1612.2.1 of the Florida building code.

Note: For use in HVHZ only. Use (16-#14x3/4" screws for the 8' fence section and 12-#14x3/4" screws for the 6' fence section) screwed directly through the 3.5x3.5 rail and into the 6" board 1/2" from the opening of the top and bottom 3.5x3.5 rail as shown on the drawing.

RICHARD BOYETTE
FL PE # 42485
4031 COCONUT BLVD
ROYAL PALM BCH FL 33411
561-790-5766

APPROVED OCT 2 5 2007

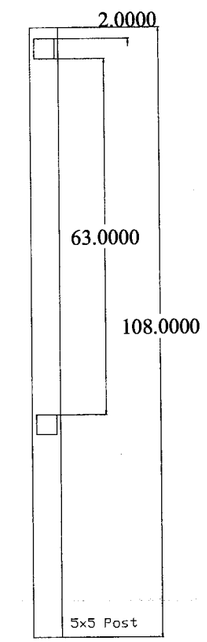

Approved as complying with the Florida Building Code
Date 11/29/2007
NOA# 07-0820.11
Miami-Dade County Product Control Division
By

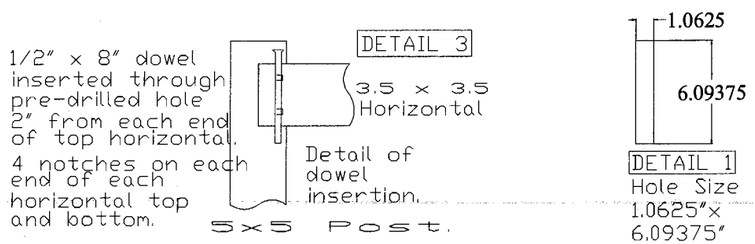

PVC Material Specifications:		
Description	Test	Properties
Rate of Burning	ASTM D 635	Class CC1
Self Ignition Temperature (Flash Ignition)	ASTM D 1929	741°F>650°F
Self Ignition Termperature (Spontaneous Ignition)	ASTM D 1929	858°F>650°F
Average Smoke Density Rating	ASTM D 2843	65.8<75
Tensile Strength (Differnece Exposed and Unexposed)	ASTM D 638	+2%<+10%

	Description:	(MDC) MELBOURNE	
Tolerance	Dwg. #:	NP 1274	Date: 04/12/07
(Unless Noted)	Sheet #:	5 of 6	Drawn By: Jay Ice
Frctns. ±1/32	Scale:	None	Revision: 1
Decimals ±.031	Part #:	Refer To Drawing	
Angles ±1°	Prod. Lne:	PF	Approved By: LLS
	Material:	P.V.C.	

NP
NEBRASKA PLASTICS, INC
COZAD - NE.

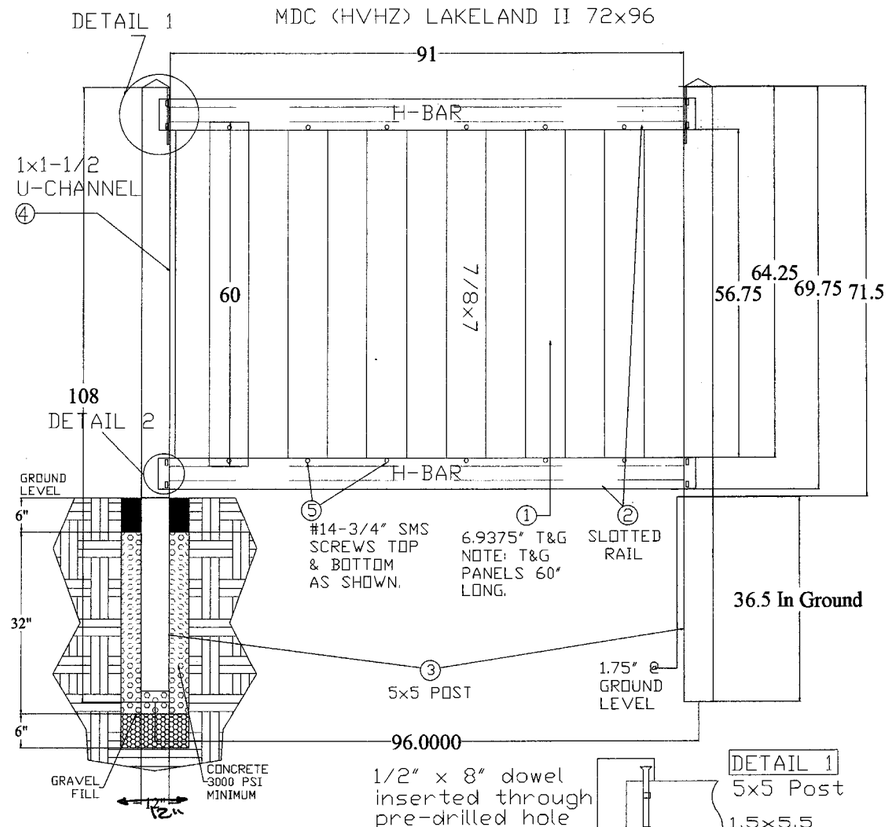

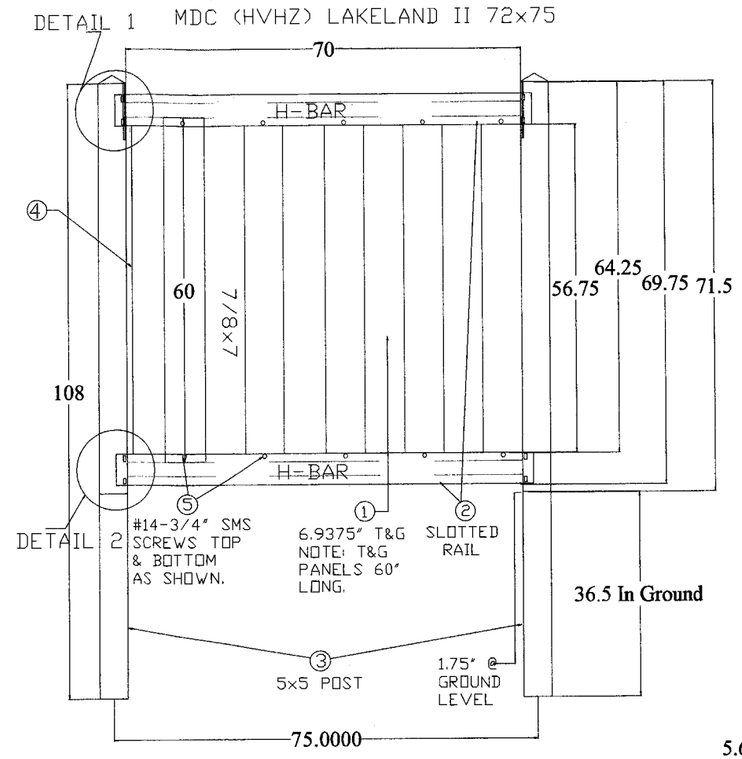

Note: This drawing contains details for fence that will be installed on a High Velocity Hurricane Zone (HVHZ).

Note: This fence system is designed to withstand a 75 mph sustained wind and a 90 mph wind gust for 3 seconds in compliance with section 1612.2.1 of the Florida building code.

Note: For use in HVHZ only. Use (12-#14x3/4" screws for the 8' fence section and 10-#14x3/4" screws for the 6' 3" fence section) screwed directly through the slotted rail and into the 6.9375 board 1/2" from the opening of the top and bottom slotted rail as shown on the drawing.

RICHARD BOYETTE
FL PE # 42485
4031 COCONUT BLVD
ROYAL PALM BCH FL 33411
561-790-5766

APPROVED OCT 25 2007

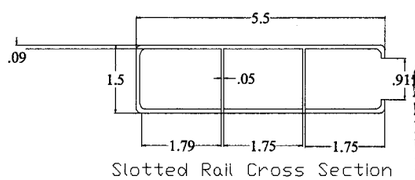

Slotted Rail Cross Section

Approved as complying with the Florida Building Code
Date 11/29/2007
NOA# 07.0820.11
Miami Dade Product Control Division
By

NOTE: Two notches per side at each end. (8 total per rail). The rails are inserted into routed holes on each post held by notches punched into each rail.

1/2" x 8" dowel inserted through pre-drilled hole 2" from each end of top horizontal.

4 notches on each end of each horizontal top and bottom.

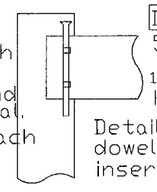

DETAIL 1
5x5 Post
1.5x5.5 Horizontal

Detail of dowel insertion.

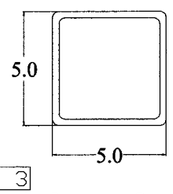

DETAIL 3
5x5 Post Cross Section
Heavy Wall Post .280 Wall Thickness (8' Center)
D-Post .170-.205 Wall Thickness (6'-3" Center)

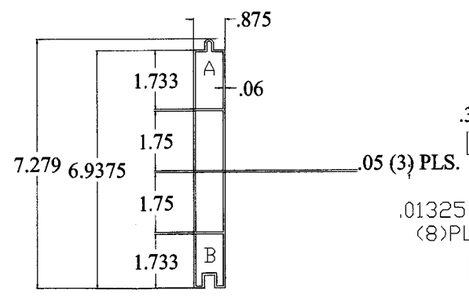

6.9375" T&G CROSS SECTION
NOTE: T&G PANEL 60"LONG.

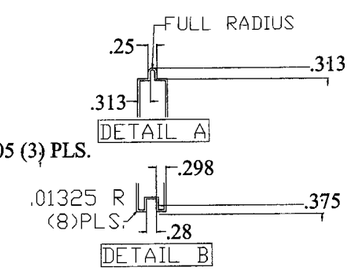

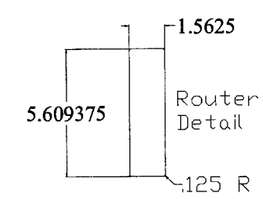

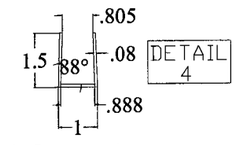

U-Channel Cross Section
1" x 1.5" x 56.75"

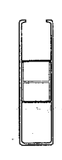

DETAIL 2
1.5x5.5 Top & Bottom Rail with 1.712x1.26x.065 Aluminum H-Bar Insert.

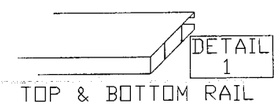

TOP & BOTTOM RAIL

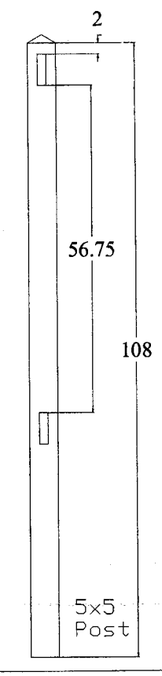

PVC Material Specifications:

Description	Test	Properties
Rate of Burning	ASTM D 635	Class CC1
Self Ignition Temperature (Flash Ignition)	ASTM D 1929	741°F>650°F
Self Ignition Termperature (Spontaneous Ignition)	ASTM D 1929	858°F>650°F
Average Smoke Density Rating	ASTM D 2843	65.8<75
Tensile Strength (Differnece Exposed and Unexposed)	ASTM D 638	+2%<+10%

	Description:	(MDC) LAKELAND II	
Tolerance	Dwg. #:	NP 1275	Date: 02/21/07
(Unless Noted)	Sheet #:	6 of 6	Drawn By: Jay Ice
Frctns. ±1/32	Scale:	None	Revision: 2
Decimals ±.031	Part #:	Refer To Drawing	
Angles ±1°	Prod. Lne:	PF	Approved By: LLS
	Material:	P.V.C.	

NP
NEBRASKA PLASTICS, INC
COZAD · NE.