MIAMI-DADE

BUILDING CODE COMPLIANCE OFFICE (BCCO)
PRODUCT CONTROL DIVISION

MIAMI-DADE COUNTY, FLORIDA
METRO-DADE FLAGLER BUILDING
140 WEST FLAGLER STREET, SUITE 1603
MIAMI, FLORIDA 33130-1563
(305) 375-2901 FAX (305) 375-2908

NOTICE OF ACCEPTANCE (NOA)

Innovative Metals Company, Inc.
2070 Steel Drive
Tucker, GA. 30084

SCOPE:

This NOA is being issued under the applicable rules and regulations governing the use of construction materials. The documentation submitted has been reviewed by Miami-Dade County Product Control Division and accepted by the Board of Rules and Appeals (BORA) to be used in Miami Dade County and other areas where allowed by the Authority Having Jurisdiction (AHJ).

This NOA shall not be valid after the expiration date stated below. The Miami-Dade County Product Control Division (In Miami Dade County) and/or the AHJ (in areas other than Miami Dade County) reserve the right to have this product or material tested for quality assurance purposes. If this product or material fails to perform in the accepted manner, the manufacturer will incur the expense of such testing and the AHJ may immediately revoke, modify, or suspend the use of such product or material within their jurisdiction. BORA reserves the right to revoke this acceptance, if it is determined by Miami-Dade County Product Control Division that this product or material fails to meet the requirements of the applicable building code.

This product is approved as described herein, and has been designed to comply with the Florida Building Code including the High Velocity Hurricane Zone of the Florida Building Code.

DESCRIPTION: IMETCO Series 300, 0.032" Aluminum Non-Structural Metal Roof Panel

LABELING: Each panel shall bear a permanent label with the manufacturer's name or logo, city, state and the following statement: "Miami-Dade County Product Control Approved", unless otherwise noted herein.

RENEWAL of this NOA shall be considered after a renewal application has been filed and there has been no change in the applicable building code negatively affecting the performance of this product.

TERMINATION of this NOA will occur after the expiration date or if there has been a revision or change in the materials, use, and/or manufacture of the product or process. Misuse of this NOA as an endorsement of any product, for sales, advertising or any other purposes shall automatically terminate this NOA. Failure to comply with any section of this NOA shall be cause for termination and removal of NOA.

ADVERTISEMENT: The NOA number preceded by the words Miami-Dade County, Florida, and followed by the expiration date may be displayed in advertising literature. If any portion of the NOA is displayed, then it shall be done in its entirety.

INSPECTION: A copy of this entire NOA shall be provided to the user by the manufacturer or its distributors and shall be available for inspection at the job site at the request of the Building Official.

This NOA consists of pages 1 through 5.
The submitted documentation was reviewed by Alex Tigera.

ROOFING SYSTEM APPROVAL:

Category:	Roofing
Sub-Category:	Metal, Panels (Non-Structural Application)
Material:	Aluminum
Deck Type:	Wood
Maximum Design Pressure	**-142.5 psf**

1. TRADE NAMES OF PRODUCTS MANUFACTURED OR LABELED BY APPLICANT:

Product	Dimensions	Test Specifications	Product Description
IMETCO Series 300, 0.032" Panel (Aluminum)	l = various w = 12 or 16" min. 0.032" thick	TAS 110 & TAS 125	Preformed, standing seam, coated, prefinished, aluminum panels.
IMETCO Series 300 Clip	Length (Top): 5 $^{7}/_{16}$" Length (Bottom): 3" Width (Bottom): 1½" Height: 2½" Thickness: 0.060"	TAS 125	One-piece metal clip.
Seam Caps	1" wide x ½" deep Min. 0.030" aluminum	TAS 125	Cap strips for seams.
Trim Pieces	l = varies w = varies	TAS 110	Coated steel or aluminum trim pieces.

2. EVIDENCE SUBMITTED

Test Agency	Test Identifier	Test Name/Report	Date
Valspar Corporation	Various	Salt Spray, ASTM B117	2006
Valspar Corporation	Various	Accelerated Weathering, ASTM G23	2006
PRI Asphalt Technologies	IMC-005-02-01	TAS 100	12/28/04
PRI Asphalt Technologies	IMC-004-02-01	TAS 100	12/28/04
Architectural Testing, Inc.	72199.01-109-18	TAS 125	06/11/07

APPROVED ASSEMBLIES

SYSTEM A-1: IMETCO Series 300, 0.032" thick 12" or 16" wide aluminum

Deck Type: Wood, Non-insulated

Deck Description: $^{19}/_{32}$" or greater plywood or wood plank.

Slope Range: 2":12" or greater

Maximum Uplift Pressure: **See Table A Below**

Deck Attachment: In accordance with applicable Building Code, but in no case shall it be less than #8 x 1-5/8" screws ***and washers*** spaced 6" o.c. into the joists. In reroofing, where the deck is less than $^{19}/_{32}$" thick (Minimum $^{15}/_{32}$") The above attachment method must be in addition to existing attachment.

Underlayment: Minimum underlayment shall be an ASTM D 226 Type II installed with a minimum 4" side-lap and 6" end-laps. Underlayment shall be fastened with corrosion resistant tin-caps and 12 gauge 1 ¼" annular ring-shank nails, spaced 6" o.c. at all laps and two staggered rows 12" o.c. in the field of the roll. Or, any approved underlayment having a current NOA.

Valleys: Valley construction shall be in compliance with Roofing Application Standard RAS 133 and with Innovative Metals Company's current published installation instructions.

Fire Barrier Board: Any approved fire barrier having a current NOA. Or for class A or B fire rating, install minimum ¼" thick Georgia Pacific "Dens Deck" (with current NOA) or minimum 4mm thick of Tritex, RockRoof (with current NOA) or $^{5}/_{8}$" water resistant type X gypsum sheathing with treated core and facer.
(See System Limitation #2)

Metal Panels and Accessories: Install the "IMETCO Sereis 300 (min. 0.032" thick 12"or 16" wide aluminum) Roofing Panels" and accessories in compliance with Innovative Metals Comapny's current, published installation instructions and details. Flashing, penetrations, valley construction and other details shall be constructed in compliance with the minimum requirements provided in Roofing Application Standards RAS 133.

Panels shall be installed with approved "IMETCO Series 300 Clips" located at each panel rib side lap spaced at a maximum listed in Table A below, parallel to the roof slope, fastened with #12 screws of sufficient length for minimum ½" penetration through the structural deck. Cap seams with 0.030" thick x nominal 1" wide x ½" deep aluminum cap strips using special motorized seaming tool.

Table A – Maximum Design Pressures

Roof Area	Field	Perimeter and Corner[1]
Maximum Design Pressure:	**-86.25 psf**	**-142.5 psf**
Maximum Clip Spacing:	**36" o.c.**	**12" o.c.**
Screws Per Clip:	**3**	**2**

1. Extrapolation not allowed

SYSTEM LIMITATIONS

1. The maximum designed pressure listed herein shall be applicable to all roof pressure zones (i.e. field, perimeters, and corners). Neither rational analysis, nor extrapolation shall be permitted for enhanced fastening at enhanced pressure zones (i.e. perimeters, extended corners and corners).

2. Fire Classification is not part of this acceptance; refer to a current Approved Roofing Materials Directory for fire ratings of this product.

3. All panels shall be permanently labeled with the manufacturer's name or logo, and the following statement: "Miami-Dade County Product Control Approved.

4. Panels shall be roll formed in continuous lengths from eave to ridge. Maximum lengths shall be as described in Miami-Dade County Roofing Application Protocol RAS 133.

5. All products listed herein shall have a quality assurance audit in accordance with the Florida Building Code and Rule 9B-72 of the Florida Administrative Code.

PROFILE DRAWINGS

DETAIL A

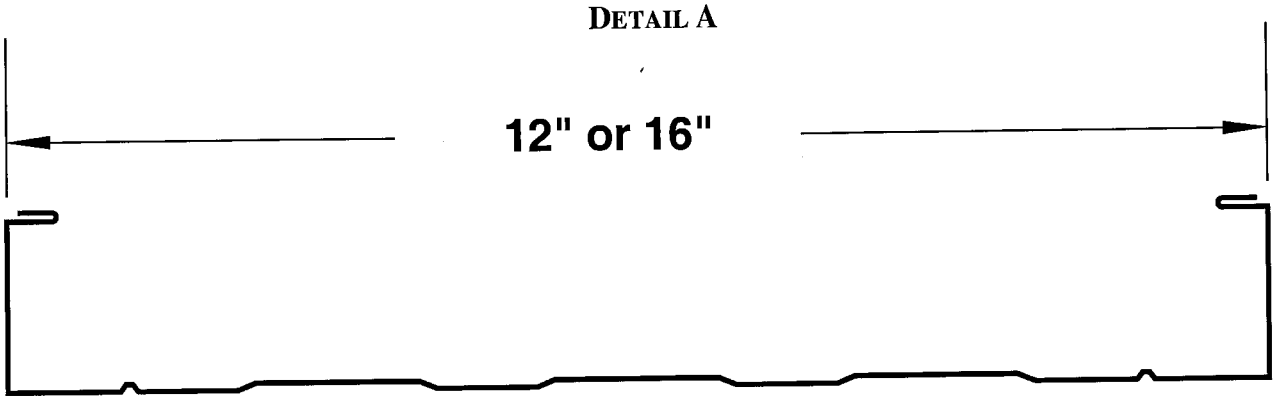

IMETCO SERIES 300 ROOF PANELS

DETAIL B

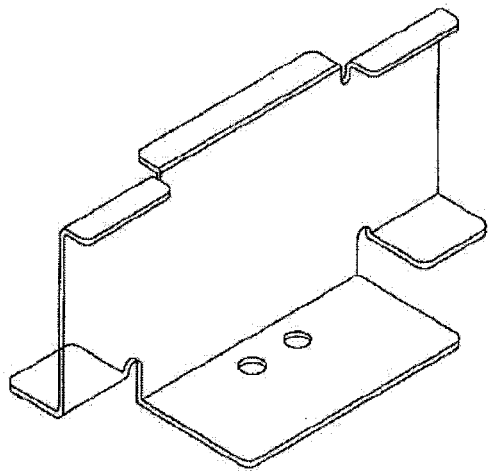

STD. CLIP
GALVANIZED STEEL

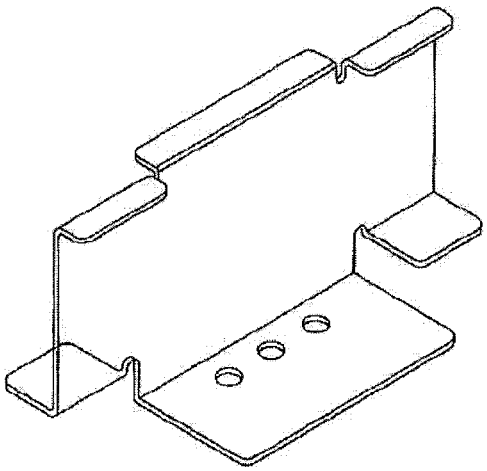

3-HOLE CLIP
GALVANIZED STEEL

IMETCO SERIES 300 CLIP

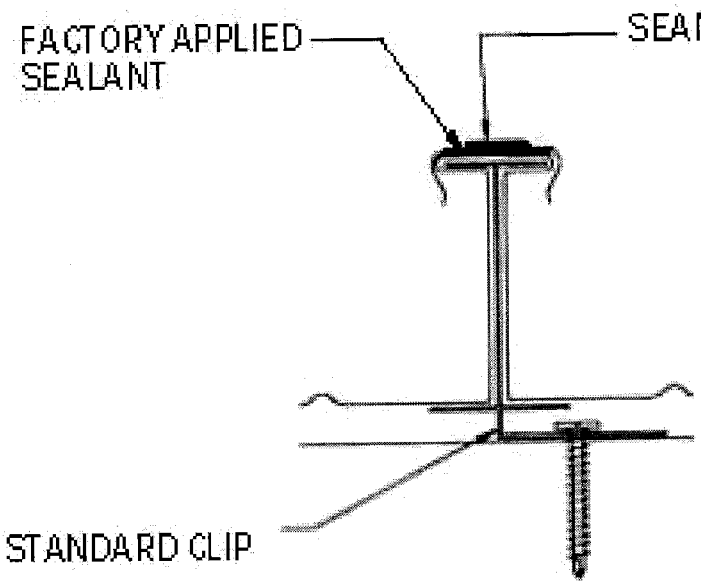

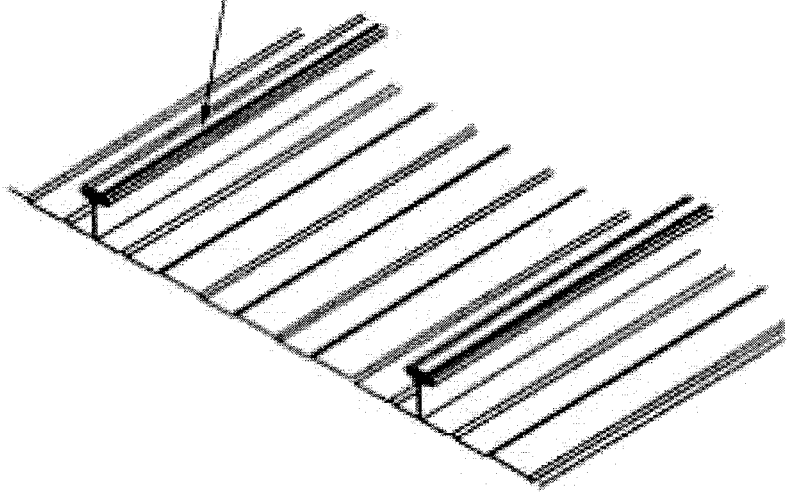

STANDARD ASSEMBLY

END OF THIS ACCEPTANCE