MIAMI-DADE COUNTY, FLORIDA

METRO-DADE FLAGLER BUILDING
140 WEST FLAGLER STREET, SUITE 1603

MIAMI, FLORIDA 33130-1563
(305) 375-2901 FAX (305) 375-2908
www.miamidade.gov/buldingcode

BUILDING CODE COMPLIANCE OFFICE (BCCO)
PRODUCT CONTROL DIVISION

NOTICE OF ACCEPTANCE (NOA)

General Impact Glass and Windows, Corp.
7840 NW 64th Street
Miami, FL. 33166

SCOPE:

This NOA is being issued under the applicable rules and regulations governing the use of construction materials. The documentation submitted has been reviewed by Miami-Dade County Product Control Division and accepted by the Board of Rules and Appeals (BORA) to be used in Miami Dade County and other areas where allowed by the Authority Having Jurisdiction (AHJ).

This NOA shall not be valid after the expiration date stated below. The Miami-Dade County Product Control Division (In Miami Dade County) and/or the AHJ (in areas other than Miami Dade County) reserve the right to have this product or material tested for quality assurance purposes. If this product or material fails to perform in the accepted manner, the manufacturer will incur the expense of such testing and the AHJ may immediately revoke, modify, or suspend the use of such product or material within their jurisdiction. BORA reserves the right to revoke this acceptance, if it is determined by Miami-Dade County Product Control Division that this product or material fails to meet the requirements of the applicable building code.

This product is approved as described herein, and has been designed to comply with the Florida Building Code, including the High Velocity Hurricane Zone.

DESCRIPTION: High Impact 50 mm Slat Aluminum Roll Up Door

APPROVAL DOCUMENT: Drawing No. **07-214**, titled "High Impact 50 mm Slat Aluminum Roll-Up Door", prepared by Tilteco Inc., dated 08/22/07, sheets 1 through 12, including sheet 11A, signed and sealed by Walter A. Tillit Jr., P. E., bearing the Miami-Dade County Product Control Approval stamp with the Notice of Acceptance number and approval date by the Miami-Dade County Product Control Division.

MISSILE IMPACT RATING: Large and Small Missile Impact

Limitation:

1. Roll-up Mechanism is not part of this approval and must be certified by independent testing agency.

LABELING: Each unit shall bear a permanent label with the manufacturer's name or logo, city, state and the following statement: "Miami-Dade County Product Control Approved or MDCPCA", unless otherwise noted herein.

RENEWAL of this NOA shall be considered after a renewal application has been filed and there has been no change in the applicable building code negatively affecting the performance of this product.

TERMINATION of this NOA will occur after the expiration date or if there has been a revision or change in the materials, use, and/or manufacture of the product or process. Misuse of this NOA as an endorsement of any product, for sales, advertising or any other purposes shall automatically terminate this NOA. Failure to comply with any section of this NOA shall be cause for termination and removal of NOA.

ADVERTISEMENT: The NOA number preceded by the words Miami-Dade County, Florida, and followed by the expiration date may be displayed in advertising literature. If any portion of the NOA is displayed, then it shall be done in its entirety.

INSPECTION: A copy of this entire NOA shall be provided to the user by the manufacturer or its distributors and shall be available for inspection at the job site at the request of the Building Official.

This NOA consists of this page 1, evidence page E-1 as well as approval document mentioned above.

The submitted documentation was reviewed by **Carlos M. Utrera, P.E.**

9/17/07

NOTICE OF ACCEPTANCE: EVIDENCE PAGE

A. DRAWINGS

1. Manufacturers extruded drawings and sections.
2. Drawing No. **07-214** titled "High Impact 50 mm Slat Aluminum Roll-Up Door", prepared by Tilteco Inc., dated 08/22/07, sheets 1 through 12, including sheet 11A, signed and sealed by Walter A. Tillit Jr., P. E.

B. TEST REPORTS

1. Test reports on Uniform Static Air Pressure Test per TAS 202, Large Missile Impact Test per TAS 201 & Cyclic Wind Pressure Test per TAS 203 of Series 50 mm Aluminum Roll up Shutter System, prepared by Fenestration Testing Laboratory, Inc., Test reports # 5229 dated 05/14/07, signed and sealed by Michael R. Wenzel, P.E.

C. CALCULATIONS

1. Comparative and structural analysis for slats; storm bars, headers, tracks, mullions and anchors, using rational analysis dated 06/04/07, pages 1 through 279 of 279 prepared by Tilteco, Inc. signed and sealed by Walter A. Tillit Jr., P.E.

D. QUALITY ASSURANCE

1. Miami Dade Building Code Compliance Office (BCCO).

E. MATERIAL CERTIFICATIONS

1. Tensile Test Report per ASTM B557, prepared by Fenestration Testing Laboratory, Inc., Report No 5205, dated 06/04/07, signed and sealed signed and sealed by Carlos S. Rionda, P.E.

F. STATEMENTS (submitted under NOA No. 07-3251)

1. Statements of product compliance to FBC & "No financial interest" dated July 13, 2007, signed and sealed by Walter A. Tillit Jr., P. E.
2. Lab. compliance letter, as part of above referenced test report.

G. OTHERS

1. Authorization letter issued by Comprehensive Quality Impact Products Association, Inc., dated 08/23/07, signed by Jose A. Zuniga, President.
2. Acknowledgment letter issued by General Impact Glass and Windows, Corp., applying using some or all test results approved under an association master file No. 07-3251, dated 08/22/07, signed by Jose A. Zuniga, President.
3. Letter issued by Tilteco, Inc., certifying that the drawing No. 07-214 is, engineering wise, completely identical to the association generic drawing No. 07-153, dated 08/22/07, signed and sealed by Walter A. Tillit, Jr., P.E.

9/17/07

Carlos M. Utrera, P. E.
Product Control Examiner
NOA No: 07-0828.11
Expiration Date: September 17, 2012
Approval Date: September 17, 2007

GENERAL NOTES:

1. ROLL-UP DOOR SHOWN ON THIS PRODUCT APPROVAL DOCUMENT (P.A.D.) HAS BEEN VERIFIED FOR COMPLIANCE IN ACCORDANCE WITH THE 2004 EDITION OF THE FLORIDA BUILDING CODE WITH THE 2005, 2006 AND 2007 SUPPLEMENTS.
   DESIGN WIND LOADS SHALL BE DETERMINED AS PER SECTION 1620 OF THE ABOVE MENTIONED CODE, IN ORDER TO VERIFY THAT COMPONENTS AND ANCHORS ON THIS P.A.D. AS TESTED WERE NOT OVER STRESSED, A 33% INCREASE IN ALLOWABLE STRESS FOR WIND LOADS WAS NOT USED IN THEIR ANALYSIS. A DURATION FACTOR CD=1.60 WAS USED FOR VERIFICATION OF FASTENERS IN WOOD.
   ROLL-UP DOOR'S ADEQUACY FOR IMPACT AND WIND RESISTANCE HAS BEEN VERIFIED IN ACCORDANCE WITH SECTION 1609.1.4 OF THE ABOVE MENTIONED CODE AS PER FENESTRATION TESTING LAB. REPORT # 5229 AS PER TAS-201, TAS-202 AND TAS-203 PROTOCOLS.

2. ALL ALUMINUM EXTRUSIONS SHALL BE 6063-T6 ALLOY (UNLESS OTHERWISE NOTED).

3. ALL SCREWS TO BE STAINLESS STEEL 304 OR 316 SERIES WITH 50 ksi YIELD STRENGTH AND 90 ksi TENSILE STRENGTH OR CORROSION RESISTANT COATED CARBON STEEL AS PER DIN 50018. ALL S.D.S. ARE TEK SCREWS MANUFACTURED BY ITW BUILDEX.

4. BOLTS TO BE ASTM A-307, GALVANIZED OR AISI 304 OR 316 SERIES STAINLESS STEEL WITH 36 ksi MINIMUM YIELD STRENGTH.

5. ALL RIVETS TO BE 5052 ALUMINUM ALLOY W/ ALUMINUM MANDREL W/ 315 lbs SHEAR STRENGTH & 500 lbs TENSILE STRENGTH.

6. ANCHORS TO WALL FOR (IA) SIDE RAIL SHALL BE AS FOLLOWS: (UNLESS OTHERWISE NOTED)

(A) TO EXISTING POURED CONCRETE: MIN. 2899 p.s.i. COMPRESSIVE STRENGTH.

NOTES:
-5/16"ø TAPCON XL ANCHORS AS MANUFACTURED BY ITW BUILDEX, INC.

A.1) MINIMUM EMBEDMENT OF TAPCON XL ANCHORS INTO POURED CONCRETE SHALL BE 1 3/4".
NO EMBEDMENT INTO STUCCO SHALL BE CONSIDERED AS PART OF THE REQUIRED EMBEDMENT.

A.2) MINIMUM EDGE DISTANCE OF TAPCON XL ANCHORS INTO POURED CONCRETE SHALL BE 4".

A.3) IN CASE THAT PRECAST STONE, PRECAST CONCRETE OR BRICK PANELS, VENEER OR PAVERS BE FOUND ON THE EXISTING WALL OR FLOOR, ANCHORS SHALL BE LONG ENOUGH TO REACH THE MAIN STRUCTURE BEHIND SUCH PANELS.

(B) TO EXISTING GROUT FILLED CELL CONCRETE BLOCK WALL: ASTM C-90

NOTES:
-5/16"ø TAPCON XL ANCHORS, AS MANUFACTURED BY ITW BUILDEX, INC.

B.1) MINIMUM EMBEDMENT OF TAPCON ANCHORS, INTO THE GROUT FILLED CELL CONCRETE BLOCK UNIT SHALL BE 2 1/4".
NO EMBEDMENT INTO STUCCO SHALL BE CONSIDERED AS PART OF THE REQUIRED EMBEDMENT.

B.2) MINIMUM EDGE DISTANCE OF TAPCON XL ANCHORS INTO GROUT FILLED CELL CONCRETE BLOCK SHALL BE 4".

B.3) IN CASE THAT PRECAST STONE, PRECAST CONCRETE OR BRICK PANELS, VENEER OR PAVERS BE FOUND ON THE EXISTING WALL OR FLOOR, ANCHORS SHALL BE LONG ENOUGH TO REACH THE MAIN STRUCTURE BEHIND SUCH PANELS.

7. ANCHORS SHALL BE INSTALLED FOLLOWING ALL OF THE RECOMMENDATIONS AND SPECIFICATIONS OF THE ANCHOR'S MANUFACTURER.

8. ANCHORS REQUIRED FOR MULLION CONNECTIONS SHALL BE AS SPECIFIED ON APPLICABLE SECTIONS SHOWN ON SHEETS 7 & 8 RESPECTIVELY.

   -HSL HEAVY DUTY SLEEVE ANCHORS TO BE AS MANUFACTURED BY HILTI, INC.

MINIMUM EDGE DISTANCE AND SPACING FOR ABOVE MENTIONED ANCHORS SHALL BE AS INDICATED BELOW OR AT ABOVE MENTIONED SHEETS. EDGE DISTANCE AND EMBEDMENTS ARE BEYOND ANY FINISH MATERIAL.

ANCHOR	SPACING @ 100%	EDGE DISTANCE @ 100%	EMBEDMENT CONCRETE	EMBEDMENT GROUT FILLED OR CONCRETE BLOCK
M16 HLS HEAVY DUTY	12 3/8"	11 3/4"	4 1/8" (3000 psi)	-

9. DOOR MANUFACTURER'S LABEL SHALL BE PLACED ON THE EXPOSED SURFACE OF THE SIDE RAIL APPROXIMATELY 4" BELOW THE TOP OF SUCH RAIL.
   LABEL SHALL READ AS FOLLOWS:
   GENERAL IMPACT GLASS AND WINDOWS, CORP.
   MIAMI, FL.
   MIAMI-DADE COUNTY PRODUCT CONTROL APPROVED.

10. IT SHALL BE THE RESPONSIBILITY OF THE CONTRACTOR TO VERIFY THAT THE EXISTING STRUCTURE IS DESIGNED TO SUPPORT Vx AND Vy FORCES AT BOTH JAMBS. SEE SHEET 9 OF FOR Vx & Vy VALUES.

11. THIS DOOR MAY BE INSTALLED WITH SLATS CONCAVE SIDE FACING OUTSIDE OR INSIDE OF BUILDING.

12. ROLL-UP MECHANISM NOT PART OF THIS APPROVAL, BUT SHALL BE CERTIFIED BY AN INDEPENDENT TESTING AGENCY.

13. ROLL-UP DOORS INSTALLATION SHALL COMPLY WITH SPECS INDICATED IN THIS DRAWING PLUS ANY BUILDING AND ZONING REGULATIONS PROVIDED BY THE JURISDICTION WHERE PERMIT IS APPLIED TO.

14. THE INSTALLATION CONTRACTOR IS TO SEAL/CAULK ALL DOOR COMPONENT EDGES WHICH REMAIN IN CONTINUOUS CONTACT WITH THE BUILDING TO PREVENT WIND/RAIN INTRUSION.

15. (a) THIS P.A.D. PREPARED BY THIS ENGINEER IS GENERIC AND DOES NOT PROVIDE INFORMATION FOR A SITE SPECIFIC PROJECT; i.e. WHERE THE SITE CONDITIONS DEVIATE FROM THE P.A.D.

    (b) CONTRACTOR TO BE RESPONSIBLE FOR THE SELECTION, PURCHASE AND INSTALLATION INCLUDING LIFE SAFETY OF THIS PRODUCT, BASED ON THIS P.A.D. PROVIDED HE/SHE DOES NOT DEVIATE FROM THE CONDITIONS DETAILED ON THIS DOCUMENT. CONSTRUCTION SAFETY AT SITE IS THE CONTRACTOR'S RESPONSIBILITY.

    (c) THIS P.A.D. WILL BE CONSIDERED INVALID IF ALTERED BY ANY MEANS.

    (d) SITE SPECIFIC PROJECTS SHALL BE PREPARED BY A REGISTERED ENGINEER OR ARCHITECT WHICH WILL BECOME THE ENGINEER OF RECORD (E.O.R.) FOR THE PROJECT AND WHO WILL BE RESPONSIBLE FOR THE PROPER USE OF THE P.A.D. ENGINEER OF RECORD, ACTING AS A DELEGATED ENGINEER TO THE P.A.D. ENGINEER, SHALL SUBMIT TO THIS LATTER THE SITE SPECIFIC DRAWINGS FOR REVIEW.

    (e) THIS P.A.D. SHALL BEAR THE DATE AND ORIGINAL SEAL AND SIGNATURE OF THE PROFESSIONAL ENGINEER OF RECORD THAT PREPARED IT.

Approved as complying with the Florida Building Code
Date 09/17/07
Product Control
Division
By

F.B.C. (High Velocity Hurricane Zone)

AUG 22 2007

© 2007 TILTECO INC.

TILTECO INC.
TILLIT TESTING & ENGINEERING COMPANY
6355 N.W. 36th. St., Ste. 305 - VIRGINIA GARDENS, Fl. 33166
Phone : (305) 871-1530 , Fax : (305) 871-1531
e-mail: tilteco@aol.com
EB-0006719
WALTER A. TILLIT Jr., P. E.
FLORIDA Lic. # 44167

HIGH IMPACT 50mm SLAT
ALUMINUM ROLL-UP DOOR

GENERAL IMPACT GLASS AND WINDOWS, CORP.
(C.Q.I.P.A. # 1)
7840 N.W. 64 STREET
MIAMI, FL. 33166
PH:(305)558-8103, FAX:(305)558-6665

REV. No	DESCRIPTION	DATE	REV. No	DESCRIPTION	DATE
1			3		
2			4		

DRAWN BY: F.P.
08/22/07 DATE
07-214 DRAWING No
SHEET 1 OF 12

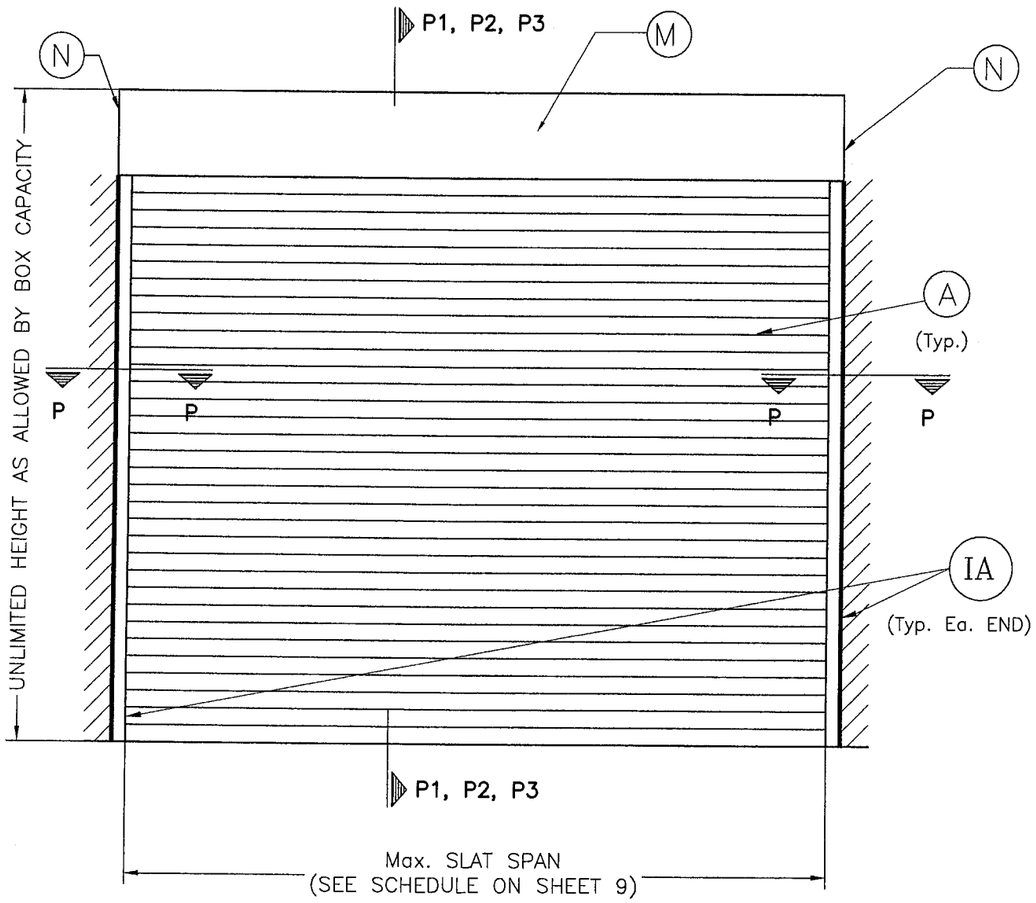

TYPICAL SINGLE UNIT ELEVATION

NOTE: SEE SHEET 3 & 4 FOR COMPONENTS NOMENCLATURE.

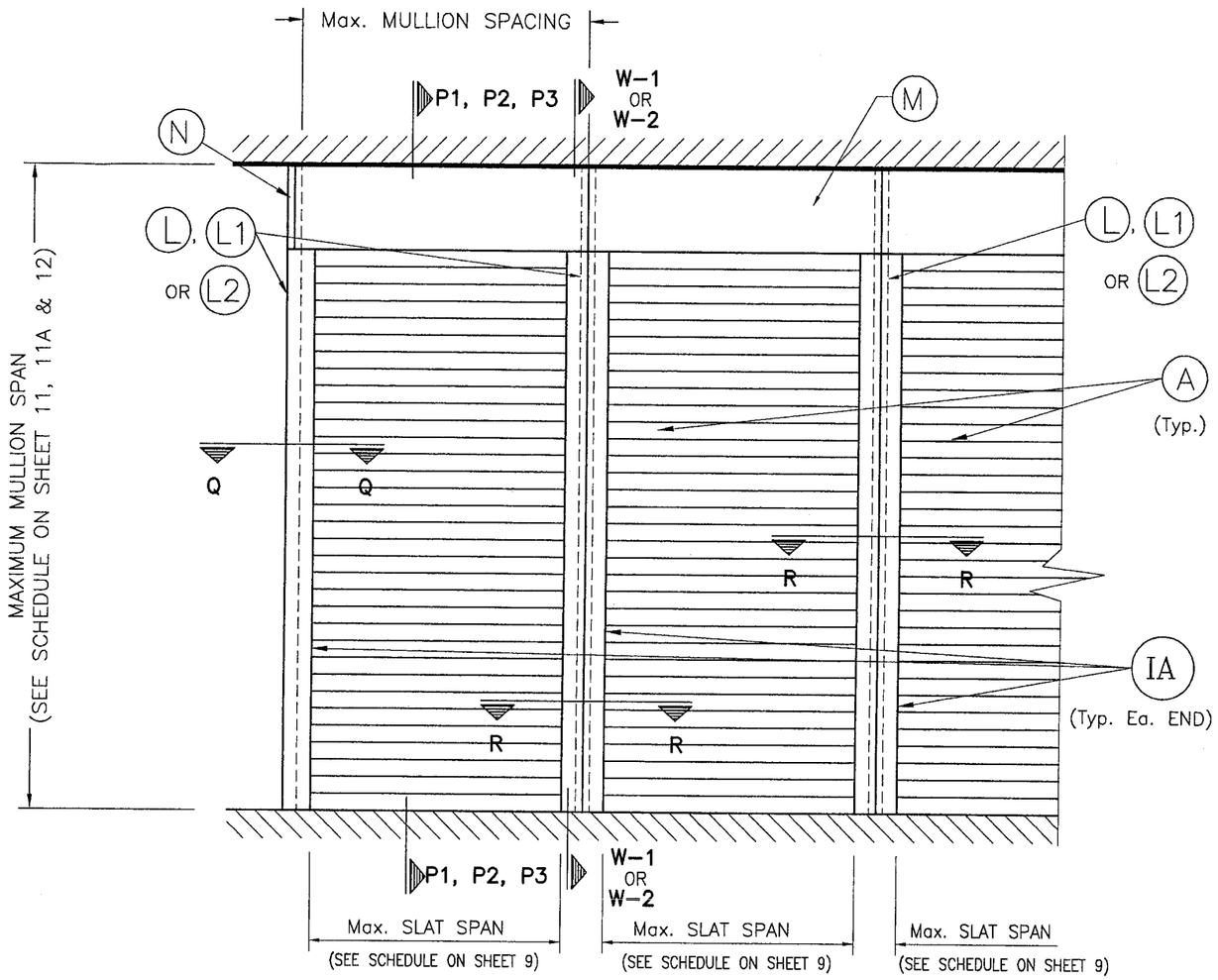

TYPICAL CONSECUTIVE SINGLE UNIT ELEVATION

NOTE: SEE SHEET 3 & 4 FOR COMPONENTS NOMENCLATURE.

NOTE:
SEE SECTIONS ON
SHEETS 5 THRU 8.

Approved as complying with the Florida Building Code
Date 09/17/07
NOA# 07-0828.11
Miami Dade Product Control Division
By

F.B.C. (High Velocity Hurricane Zone)

AUG 22 2007

© 2007 TILTECO INC.

TILTECO INC.
TILLIT TESTING & ENGINEERING COMPANY
6355 N.W. 36th. St., Ste. 305 – VIRGINIA GARDENS, Fl. 33166
Phone : (305) 871-1530 , Fax : (305) 871-1531
e-mail: tilteco@aol.com
EB-0006719
WALTER A. TILLIT Jr., P. E.
FLORIDA Lic. # 44167

HIGH IMPACT 50mm SLAT
ALUMINUM ROLL-UP DOOR

GENERAL IMPACT GLASS AND WINDOWS, CORP.
(C.Q.I.P.A. # 1)
7840 N.W. 64 STREET
MIAMI, FL. 33166
PH:(305)558-8103, FAX:(305)558-6665

REV. No	DESCRIPTION	DATE	REV. No	DESCRIPTION	DATE
1			3		
2			4		

DRAWN BY: F.P.

08/22/07
DATE

07-214
DRAWING No

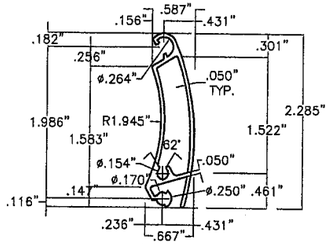

(A) SLAT

50mm EXTRUDED ALUMINUM SLAT

6061–T6 OR 6005–T5 ALUMINUM ALLOY

Fy = 35.0 ksi

Ftu = 38.0 ksi

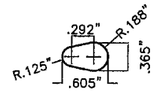

(B) SLAT STOPPER

5005–H32 OR 3004–H16 ALUMINUM ALLOY (t = 0.050")

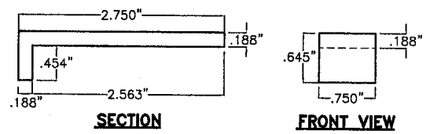

(C) WIND LOCK FOR SLAT (A)

6061–T6 OR 6005–T5 ALUMINUM ALLOY

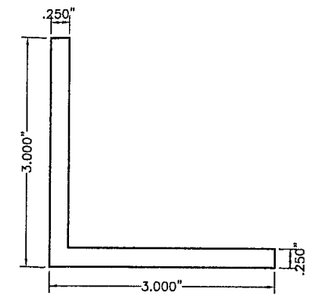

(F) INSIDE MOUNT ANGLE

6063–T6 ALUMINUM ALLOY

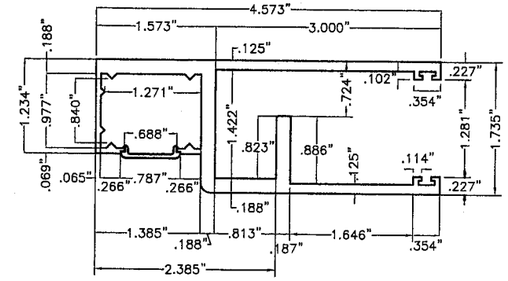

(IA) TYPE 1 SIDE RAIL

EXTRUDED ALUMINUM TRACK

6061–T6 OR 6005–T5 ALUMINUM ALLOY

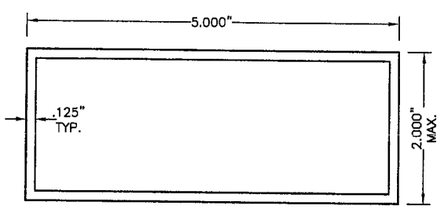

(J) BUILD–OUT TUBE

6063–T6 ALUMINUM ALLOY

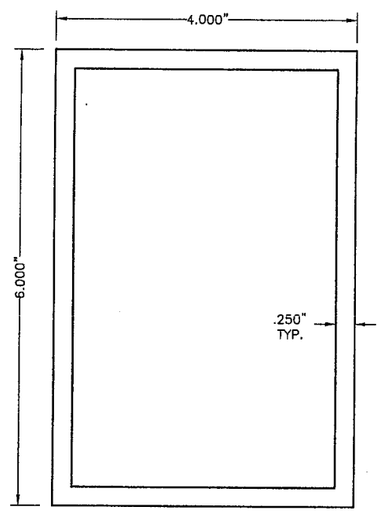

(L) TYPE 1 MULLION

6061–T6 ALUMINUM ALLOY

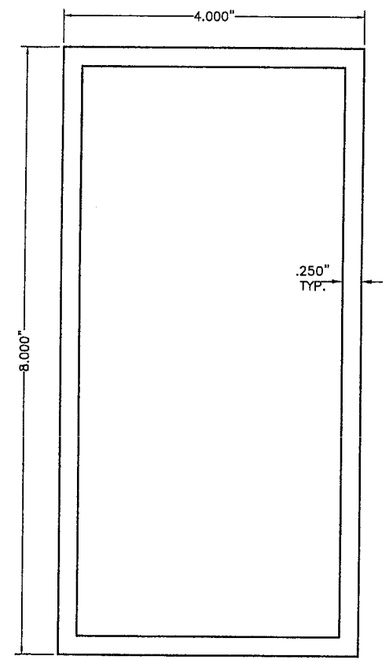

(L1) TYPE 2 MULLION

6061–T6 ALUMINUM ALLOY

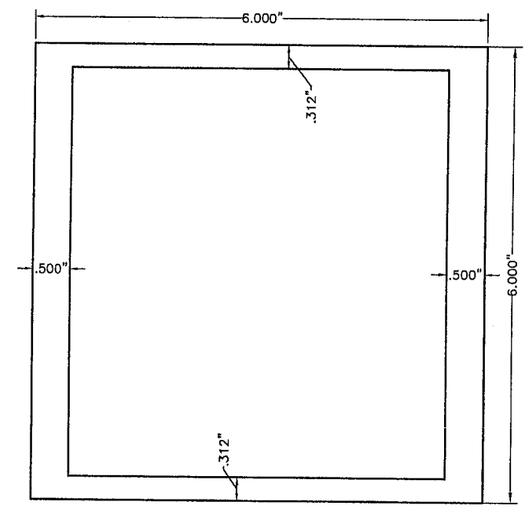

(L2) TYPE 3 MULLION

6061–T6 ALUMINUM ALLOY

Approved as complying with the Florida Building Code
Date 9/17/07
NOA# 07-0828.11
Miami-Dade County Building Code Compliance Office
Division
By

F.B.C. (High Velocity Hurricane Zone)

COMPONENTS

SCALE: 1/2" = 1"

AUG 2 3 2007

© 2007 TILTECO INC.

TILTECO INC.
TILLIT TESTING & ENGINEERING COMPANY
6355 N.W. 36th. St., Ste. 305 – VIRGINIA GARDENS, Fl. 33166
Phone : (305) 871–1530 , Fax : (305) 871–1531
e–mail: tilteco@aol.com
EB–0006719
WALTER A. TILLIT Jr., P. E.
FLORIDA Lic. # 44167

HIGH IMPACT 50mm SLAT
ALUMINUM ROLL-UP DOOR

GENERAL IMPACT GLASS AND WINDOWS, CORP.
(C.Q.I.P.A. # 1)
7840 N.W. 64 STREET
MIAMI, FL. 33166
PH:(305)558–8103, FAX:(305)558–6665

REV. No	DESCRIPTION	DATE	REV. No	DESCRIPTION	DATE
1			3		
2			4		

DRAWN BY: F.P.

08/22/07 DATE

07–214 DRAWING No

SHEET 3 OF 12

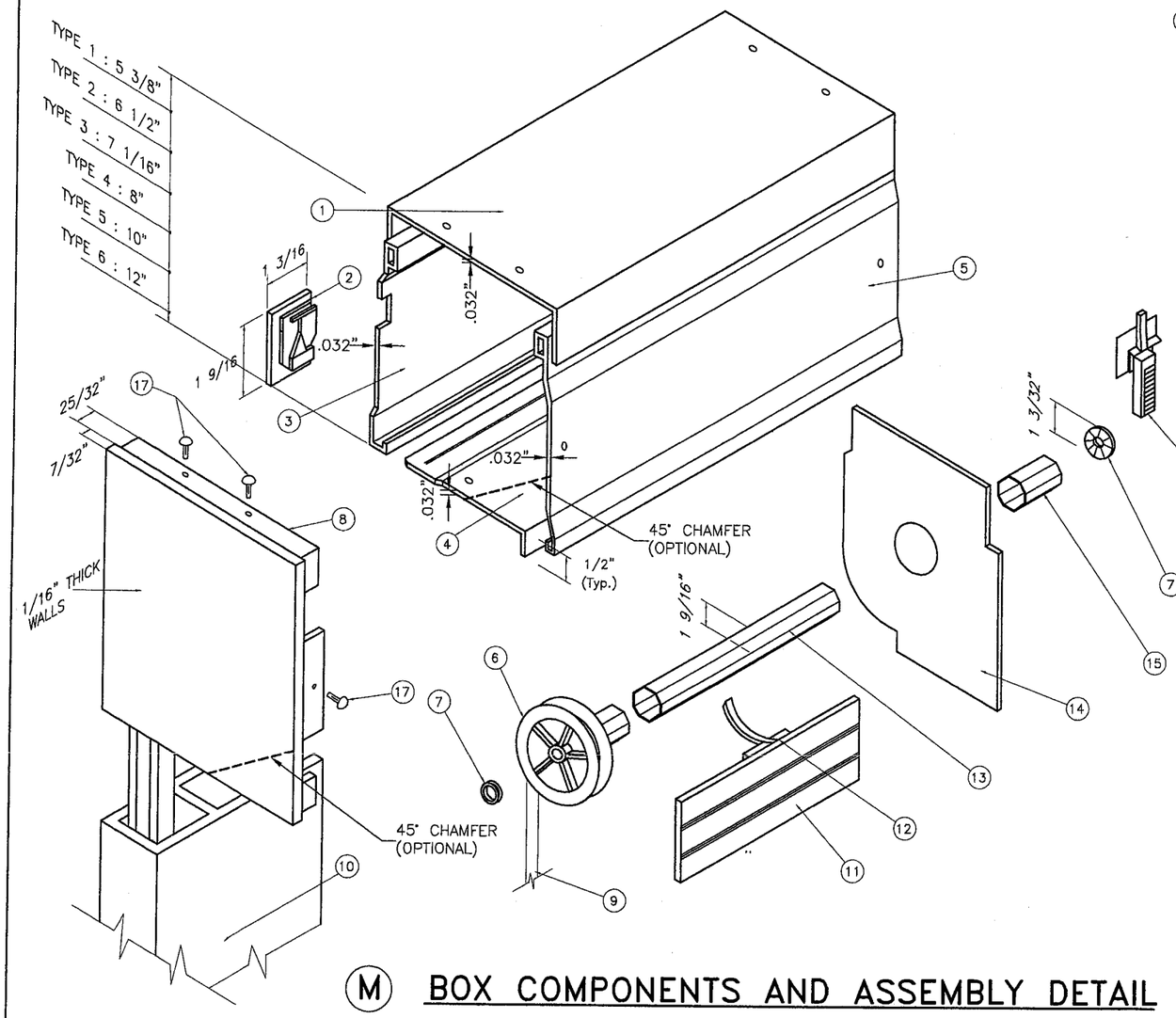

(M) BOX COMPONENTS AND ASSEMBLY DETAIL

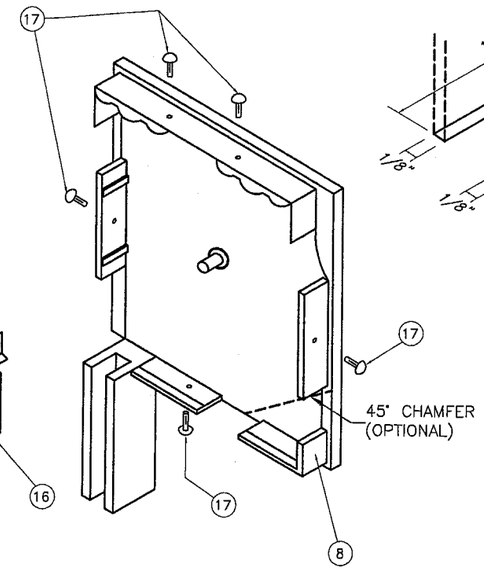

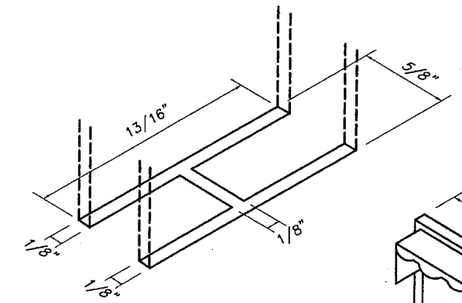

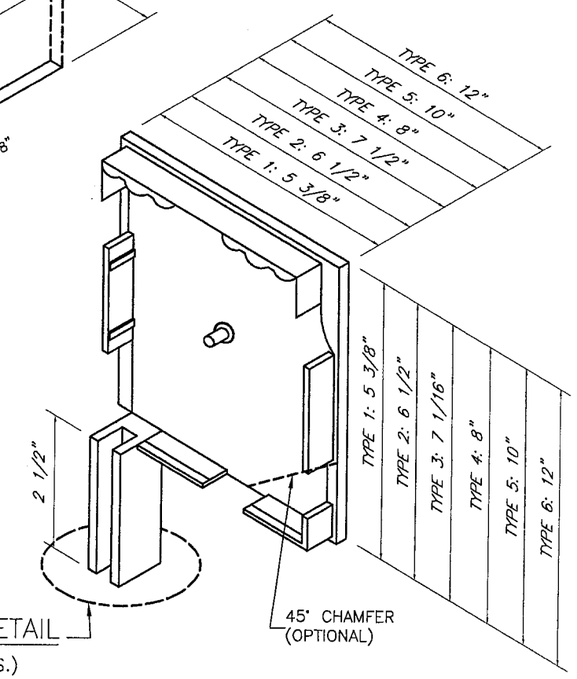

STUB DETAIL
(N. T. S.)

(N) BOX SIDE BRACKET TYPES

1. TOP PROFILE 3005-H28 ALLOY.
2. BOTTOM LEADER W/PLUSH.
3. REAR PROFILE 3005-H28 ALLOY.
4. BOTTOM PROFILE 3005-H28 ALLOY.
5. COVER PROFILE 3005-H28 ALLOY.
6. NYLON DISK: 4 1/4" O. D.
7. ROLLING CUSHION W/BALLS.
8. BOX SIDE BRACKET: CAST ALUMINUM.
9. RIBBON: 17/32" WIDE.
10. SIDE RAIL.
11. SLAT.
12. EXTRUDED ALUMINUM DRAWING HOOP.
13. GALVANIZED STEEL DRUM: 1 9/16" O. D. x 0.032" Thk.
14. RETAINING METAL PLATE: 26 Ga. Galv. Stl. AT EACH END.
15. NYLON FERRULE: 1 17/32" O. D. x 0.045" Thk. x 3 5/16" Long.
16. NYLON FUNNEL.
17. SCREWS: # 4 x 1/2" S. S.

Approved as complying with the Florida Building Code
Date 9/17/07
NOA# 07-0828.11
Miami Dade Product Control Division
By

F.B.C. (High Velocity Hurricane Zone)

AUG 22 2007

© 2007 TILTECO INC.

TILTECO INC.
TILLIT TESTING & ENGINEERING COMPANY
6355 N.W. 36th. St., Ste. 305 - VIRGINIA GARDENS, Fl. 33166
Phone : (305) 871-1530 , Fax : (305) 871-1531
e-mail: tilteco@aol.com
EB-0006719
WALTER A. TILLIT Jr., P. E.
FLORIDA Lic. # 44167

HIGH IMPACT 50mm SLAT
ALUMINUM ROLL-UP DOOR

GENERAL IMPACT GLASS AND WINDOWS, CORP.
(C.Q.I.P.A. # 1)
7840 N.W. 64 STREET
MIAMI, FL. 33166
PH:(305)558-8103, FAX:(305)558-6665

REV. No	DESCRIPTION	DATE	REV. No	DESCRIPTION	DATE
1			3		
2			4		

DRAWN BY: F.P.
08/22/07 DATE
07-214 DRAWING No
SHEET 4 OF 12

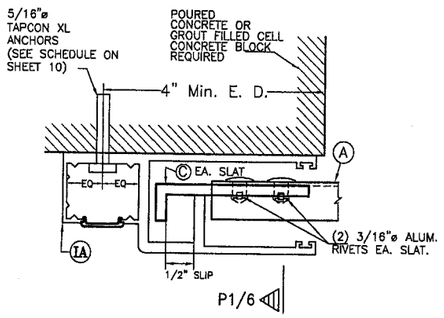

SECTION P – P (1) : WALL MOUNT

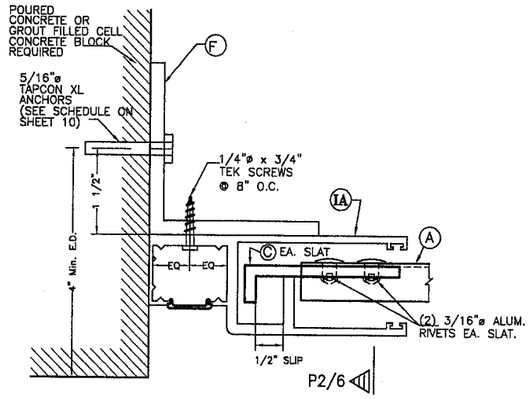

SECTION P – P (2) : INSIDE WALL MOUNT

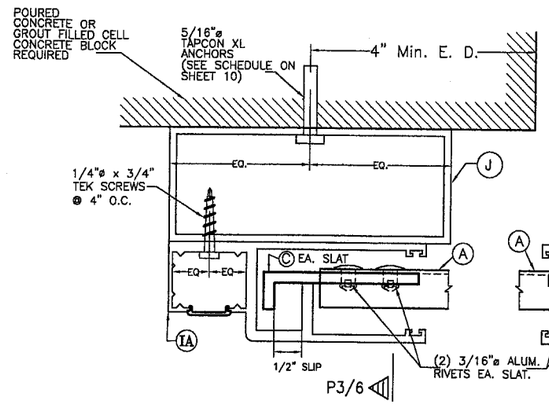

SECTION P – P (3) : BUILD-OUT MOUNT

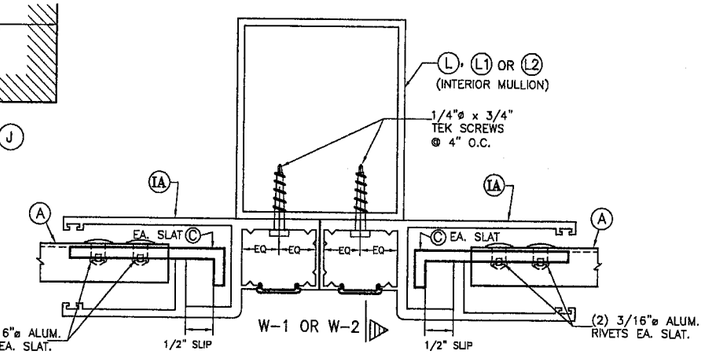

SECTION R – R : MULLION MOUNT (FACE MOUNT)

SIDE RAIL CONNECTIONS

TO POURED CONCRETE OR GROUT FILLED CELL CONCRETE BLOCK WALL

SCALE: 1/2" = 1"

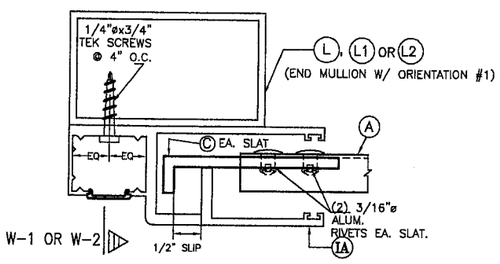

SECTION Q – Q : MULLION MOUNT (FACE MOUNT)

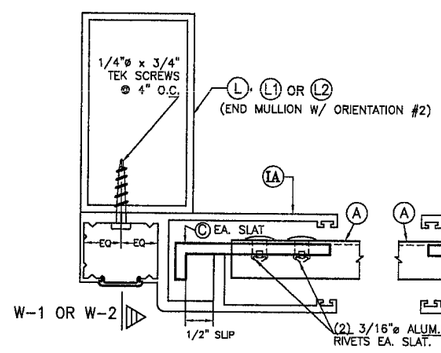

SECTION Q – Q : MULLION MOUNT (FACE MOUNT)

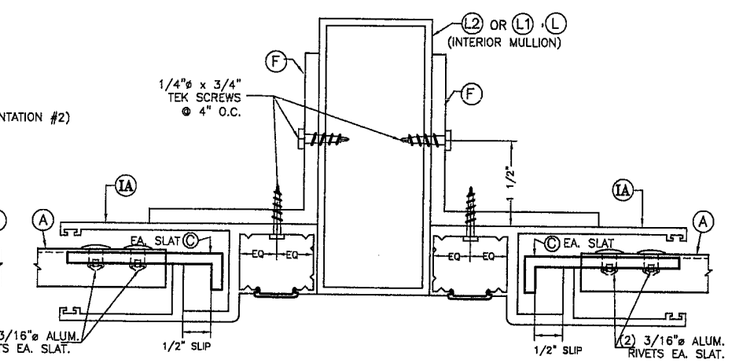

SECTION R – R : MULLION MOUNT (INSIDE MOUNT)

9/17/07
07-0820.11
Division
By

F.B.C. (High Velocity Hurricane Zone)

AUG 29 2007

© 2007 TILTECO INC.

TILTECO INC.
TILLIT TESTING & ENGINEERING COMPANY
6355 N.W. 36th. St., Ste. 305 – VIRGINIA GARDENS, Fl. 33166
Phone : (305) 871-1530 , Fax : (305) 871-1531
e-mail: tilteco@aol.com
EB-0006719
WALTER A. TILLIT Jr., P. E.
FLORIDA Lic. # 44167

HIGH IMPACT 50mm SLAT
ALUMINUM ROLL-UP DOOR

GENERAL IMPACT GLASS AND WINDOWS, CORP.
(C.Q.I.P.A. # 1)
7840 N.W. 64 STREET
MIAMI, FL. 33166
PH:(305)558-8103, FAX:(305)558-6665

REV. No	DESCRIPTION	DATE	REV. No	DESCRIPTION	DATE
1	GENERAL	8/21/07	3		
2			4		

DRAWN BY: F.P.

08/22/07
DATE

07-214
DRAWING No

SHEET 5 OF 12

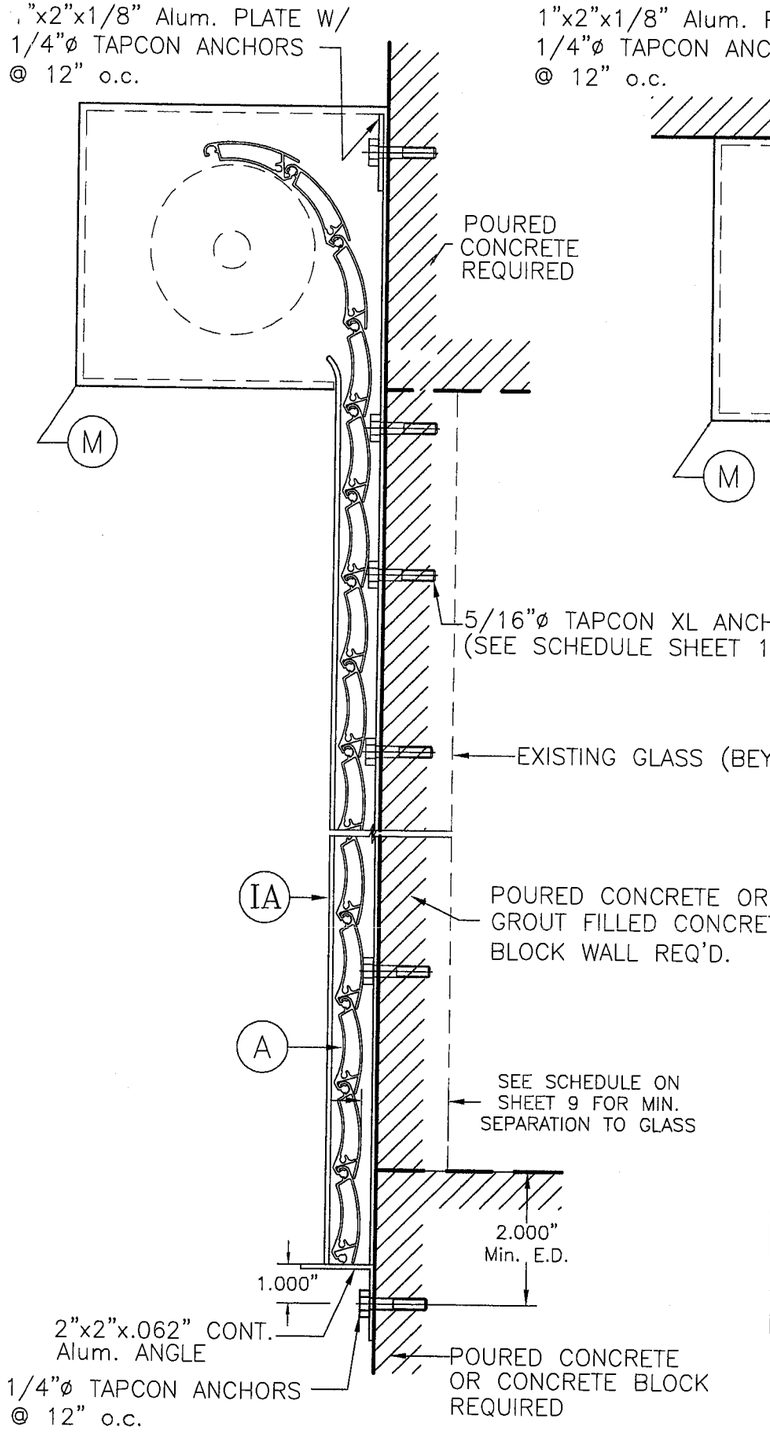

SECTION P1-P1

N. T. S.

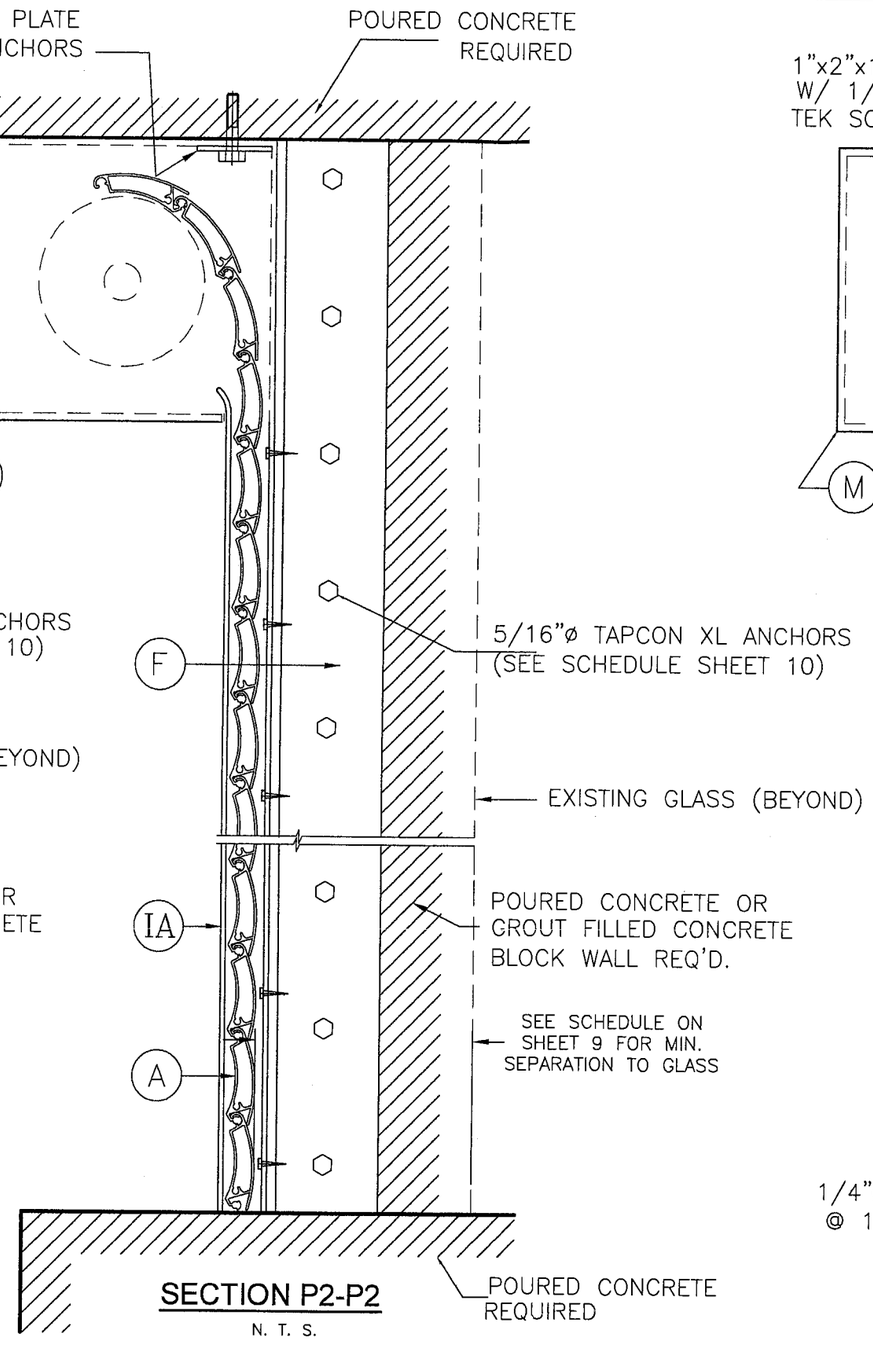

SECTION P2-P2

N. T. S.

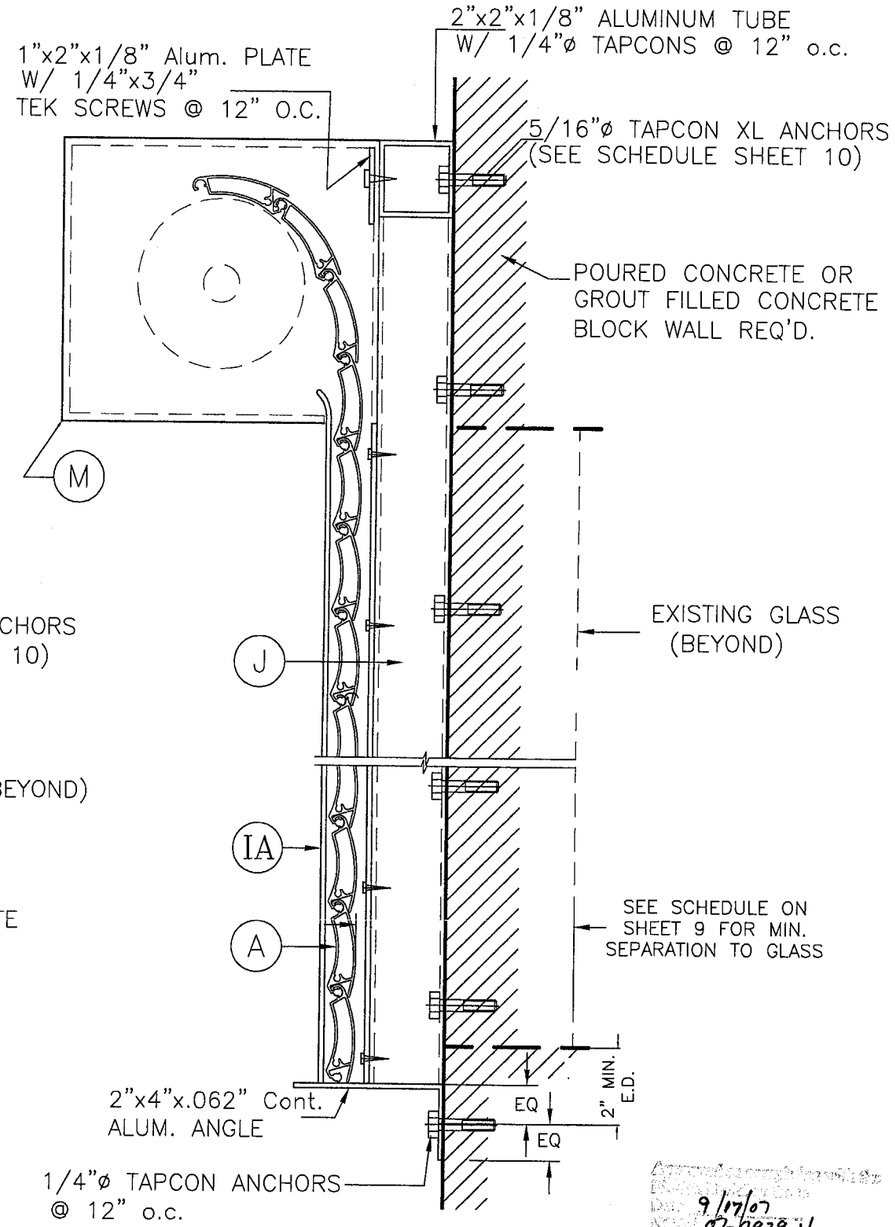

SECTION P3-P3

N. T. S.

9/17/07
07-0828.11
By

F.B.C. (High Velocity Hurricane Zone)

© 2007 TILTECO INC.

TILTECO INC.
TILLIT TESTING & ENGINEERING COMPANY
6355 N.W. 36th. St., Ste. 305 – VIRGINIA GARDENS, Fl. 33166
Phone : (305) 871-1530 , Fax : (305) 871-1531
e-mail: tilteco@aol.com
EB-0006719
WALTER A. TILLIT Jr., P. E.
FLORIDA Lic. # 44167

AUG 22 2007

HIGH IMPACT 50mm SLAT
ALUMINUM ROLL-UP DOOR

GENERAL IMPACT GLASS AND WINDOWS, CORP.
(C.Q.I.P.A. # 1)
7840 N.W. 64 STREET
MIAMI, FL. 33166
PH:(305)558-8103, FAX:(305)558-6665

REV. No	DESCRIPTION	DATE	REV. No	DESCRIPTION	DATE
1			3		
2			4		

DRAWN BY: F.P.

08/22/07
DATE

07-214
DRAWING No

SHEET 6 OF 12

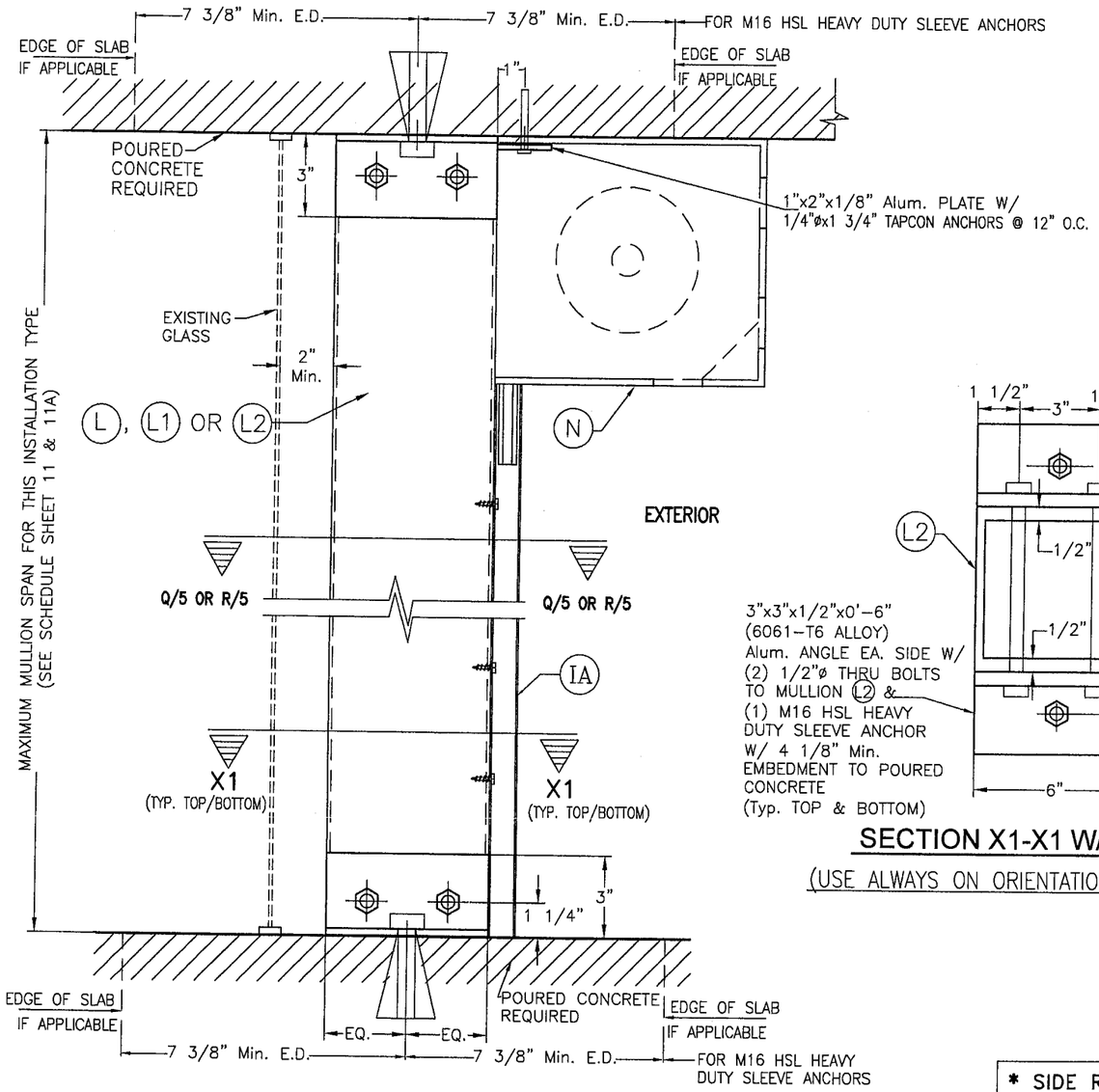

FLOOR TO CEILING / TRAPPED MOUNTING : MULLION (L), (L1) OR (L2)

SECTION W-1

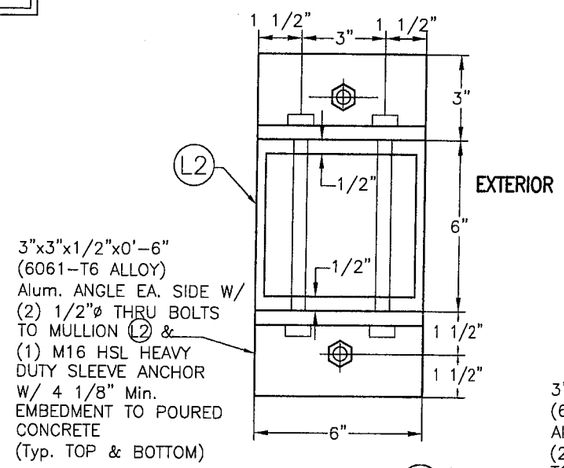

SECTION X1-X1 W/ (L2) *

(USE ALWAYS ON ORIENTATION # 1)

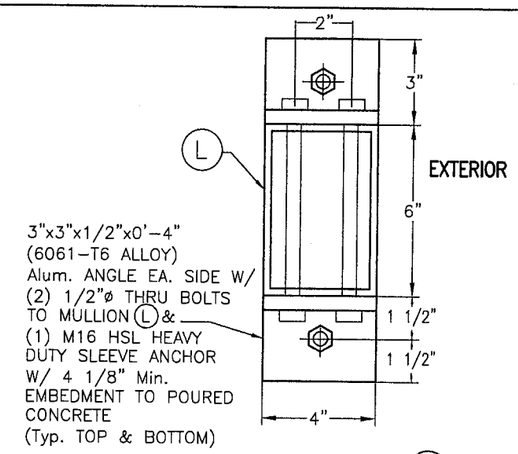

SECTION X1-X1 W/ (L) *

(W/ ORIENTATION # 1)

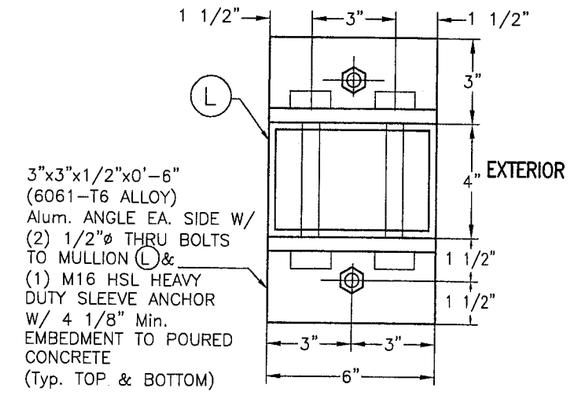

ALTERNATIVE SECTION X1-X1 W/ (L) *

(W/ ORIENTATION # 2)

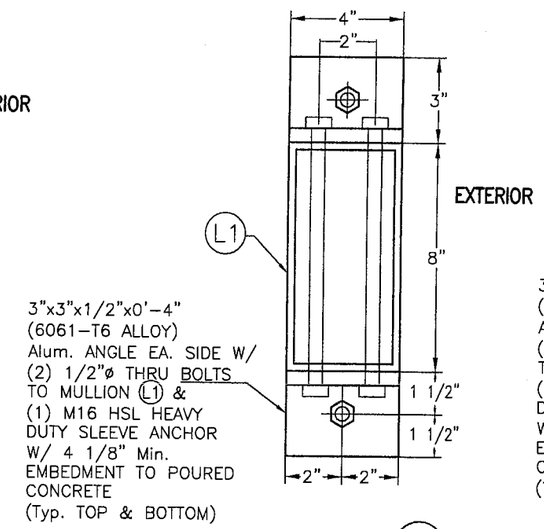

SECTION X1-X1 W/ (L1) *

(W/ ORIENTATION # 1)

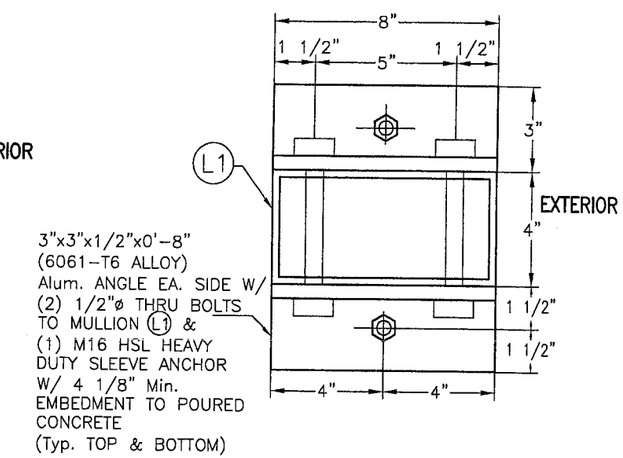

ALTERNATIVE SECTION X1-X1 W/ (L1) *

(W/ ORIENTATION # 2)

* SIDE RAIL (IA) NOT SHOWN FOR CLARITY. IT GOES ON EXTERIOR SIDE OF MULLION.

9/17/07
07-0828.11

F.B.C. (High Velocity Hurricane Zone)

END & INTERIOR TRAPPED MOUNTED MULLION INSTALLATION

SCALE: 3/16" = 1"

AUG 2 0 2007

© 2007 TILTECO INC.

TILTECO INC.
TILLIT TESTING & ENGINEERING COMPANY
6355 N.W. 36th. St., Ste. 305 – VIRGINIA GARDENS, Fl. 33166
Phone : (305) 871-1530 , Fax : (305) 871-1531
e-mail: tilteco@aol.com
EB-0006719
WALTER A. TILLIT Jr., P. E.
FLORIDA Lic. # 44167

HIGH IMPACT 50mm SLAT ALUMINUM ROLL-UP DOOR

GENERAL IMPACT GLASS AND WINDOWS, CORP.
(C.Q.I.P.A. # 1)
7840 N.W. 64 STREET
MIAMI, FL. 33166
PH:(305)558-8103, FAX:(305)558-6665

REV. No	DESCRIPTION	DATE	REV. No	DESCRIPTION	DATE
1			3		
2			4		

DRAWN BY: F.P.
08/22/07 DATE
07-214 DRAWING No
SHEET 7 OF 12

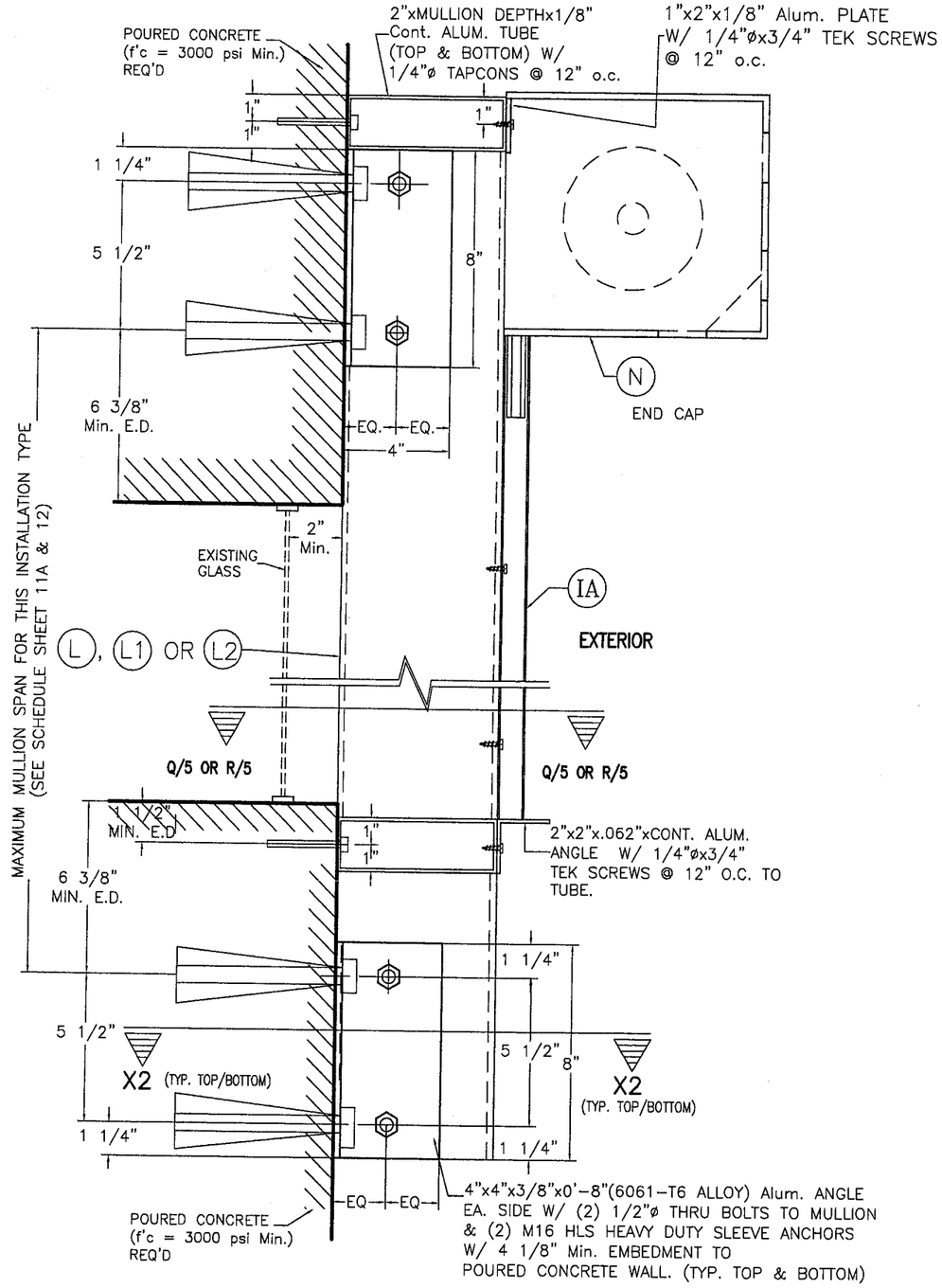

WALL MOUNTING : MULLION (L), (L1) OR (L2)
POURED CONCRETE WALL
SECTION W-2

END & INTERIOR WALL MOUNTED MULLION INSTALLATION

SCALE: 3/16"= 1"

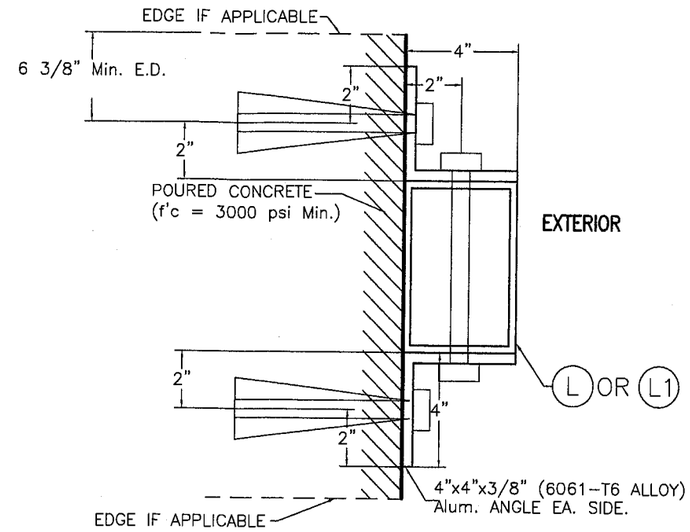

SECTION X2-X2 W/ (L) OR (L1) *
(W/ ORIENTATION # 1)

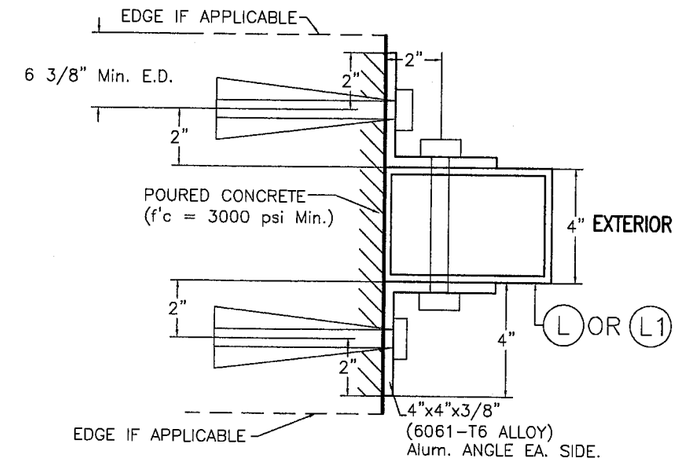

ALTERNATIVE SECTION X2-X2 W/ (L) OR (L1) *
(W/ ORIENTATION # 2)

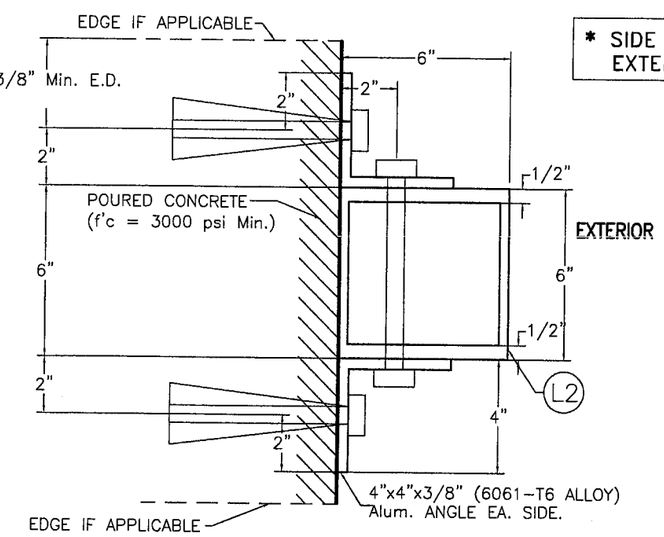

SECTION X2-X2 W/ (L2) *
(W/ ORIENTATION # 1)

* SIDE RAIL (IA) NOT SHOWN FOR CLARITY. IT GOES ON EXTERIOR SIDE OF MULLION.

9/17/07
07-0828.11

F.B.C. (High Velocity Hurricane Zone)

AUG 22 2007

© 2007 TILTECO INC.

TILTECO INC.
TILLIT TESTING & ENGINEERING COMPANY
6355 N.W. 36th. St., Ste. 305 – VIRGINIA GARDENS, Fl. 33166
Phone : (305) 871-1530 , Fax : (305) 871-1531
e-mail: tilteco@aol.com
EB-0006719
WALTER A. TILLIT Jr., P. E.
FLORIDA Lic. # 44167

HIGH IMPACT 50mm SLAT ALUMINUM ROLL-UP DOOR

GENERAL IMPACT GLASS AND WINDOWS, CORP.
(C.Q.I.P.A. # 1)
7840 N.W. 64 STREET
MIAMI, FL. 33166
PH:(305)558-8103, FAX:(305)558-6665

REV. No	DESCRIPTION	DATE	REV. No	DESCRIPTION	DATE
1			3		
2			4		

DRAWN BY: F.P.
08/22/07 DATE
07-214 DRAWING No
SHEET 8 OF 12

SLAT PERFORMANCE CHART: MAXIMUM DESIGN PRESSURE RATING (p.s.f) FOR A 1/2" SLIP (in) AND SLAT MOUNT CONDITION.

(USE MAXIMUM VALUE BETWEEN POSITIVE AND NEGATIVE LOAD)

MAXIMUM DESIGN LOAD (p.s.f.)	REQUIRED MAX. SLAT SPAN (FT) WALL & INSIDE MOUNT SEE NOTES *	REQUIRED MAX. SLAT SPAN (FT) B.O. MOUNT SEE NOTES *	MINIMUM SEPARATION TO GLASS ** (in)
30.0	24'–0"	17'–9"	9 11/16"
35.0	22'–5"	16'–1"	
40.0	20'–3"	14'–10"	
45.0	18'–6"	13'–10"	
50.0	17'–1"	12'–11"	
55.0	15'–11"	12'–3"	
60.0	14'–11"	11'–8"	
65.0	14'–1"	11'–2"	
70.0	13'–4"	10'–8"	
75.0	12'–8"	10'–4"	
80.0	12'–1"	10'–0"	
85.0	11'–7"	9'–8"	4 7/8"
90.0	11'–2"	9'–4"	
95.0	10'–9"	9'–1"	
100.0	10'–4"	8'–10"	
105.0	10'–0"	8'–8"	
110.0	9'–8"	8'–5"	
115.0	9'–5"	8'–3"	
120.0	9'–2"	8'–1"	
125.0	8'–11"	7'–11"	
130.0	8'–8"	7'–10"	
135.0	8'–6"	7'–8"	
140.0	8'–3"	7'–6"	
145.0	8'–1"	7'–5"	
150.0	7'–11"	7'–3"	
155.0	7'–9"	7'–2"	
160.0	7'–6"	7'–1"	2 7/8"

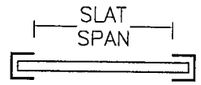

SLAT SPAN DEFINITION

SCHEDULE 1: Vx FORCES (Lb/FT) & Vy FORCES (Lb/FT) ACTING AT JAMBS FOR A MAXIMUM DESIGN PRESSURE RATING RANGE, SLAT SPAN RANGE FOR POURED CONCRETE OR GROUT FILLED CELL CONCRETE BLOCK WALL BUILDINGS

MAXIMUM DESIGN LOAD RANGE (p.s.f.)	SLAT SPAN RANGE																	
	0'–4'		> 4'–5'		> 5'–6'		> 6'–7'		> 7'–9'		> 9'–12'		> 12'–16'		> 16'–20'		> 20'–24'	
	Vx	Vy	Vx	Vy	Vx	Vy	Vx	Vy	Vx	Vy	Vx	Vy	Vx	Vy	Vx	Vy	Vx	Vy
≤ 30.0	10	60	10	75	10	90	10	105	10	135	471	180	954	240	1389	300	1815	360
>31–40	10	80	10	100	10	120	10	140	152	180	710	240	1296	320	1841	400	1874	405
>41–60	10	120	10	150	10	180	10	210	479	270	1172	360	1750	448	–	–	–	–
>61–80	10	160	10	200	10	240	57	280	794	360	1619	480	1640	483	–	–	–	–
>81–105	10	210	10	263	10	315	347	368	1175	473	1522	525	–	–	–	–	–	–
>106–120	10	240	10	300	10	360	515	420	1400	540	1465	550	–	–	–	–	–	–
>121–140	10	280	10	350	104	420	734	490	1361	578	–	–	–	–	–	–	–	–
>141–160	10	320	10	400	290	480	949	560	1232	600	–	–	–	–	–	–	–	–

* NOTES:

1. ABOVE INDICATED MAX. SLAT SPANS MAY BE USED AS LONG AS ANCHOR SPACING SCHEDULES ON SHEET 10 INDICATE THAT A SPACING IS AVAILABLE FOR THE CORRESPONDING SLAT SPAN AND DESIGN LOAD.
2. REQUIRES SIDE RAILS WITH 5/16"ø TAPCON XL INSTALLED INTO POURED CONCRETE OR GROUT FILLED CELL CONCRETE BLOCK WALL OR 1/4"ø TEK SCREWS AT MULLIONS CONNECTION VALID FOR WALL MOUNTED, INSIDE MOUNTED, AND BUILD–OUT MOUNTED.
3. MAXIMUM SLAT SPANS FOR INTERMEDIATE LOADS MAY BE DETERMINED BY LINEAR INTERPOLATION BETWEEN END VALUES.

** IN CASE PRODUCT IS USED AS AN HURRICANE ABATEMENT SYSTEM TO PROTECT THE BUILDING ENVELOPE, IT MUST BE INSTALLED AWAY FROM THE BUILDING COMPONENT TO BE PROTECTED NO LESS THAN MINIMUM SEPARATION INDICATED ON SLAT PERFORMANCE CHART.

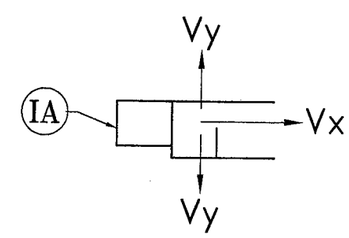

9/17/07
07-0828.11

F.B.C. (High Velocity Hurricane Zone)

AUG 22 2007

© 2007 TILTECO INC.

TILTECO INC.
TILLIT TESTING & ENGINEERING COMPANY
6355 N.W. 36th. St., Ste. 305 – VIRGINIA GARDENS, Fl. 33166
Phone : (305) 871–1530 , Fax : (305) 871–1531
e–mail: tilteco@aol.com
EB–0006719
WALTER A. TILLIT Jr., P. E.
FLORIDA Lic. # 44167

HIGH IMPACT 50mm SLAT
ALUMINUM ROLL-UP DOOR

GENERAL IMPACT GLASS AND WINDOWS, CORP.
(C.Q.I.P.A. # 1)
7840 N.W. 64 STREET
MIAMI, FL. 33166
PH:(305)558–8103, FAX:(305)558–6665

REV. No	DESCRIPTION	DATE	REV. No	DESCRIPTION	DATE
1			3		
2			4		

DRAWN BY: F.P.
08/22/07 DATE
07–214 DRAWING No
SHEET 9 OF 12

SIDE RAIL MAX. ANCHOR'S SPACING FOR WALL MOUNT & MAXIMUM DESIGN LOAD RANGE & SLAT SPAN RANGE †

MAXIMUM DESIGN LOAD RANGE (p.s.f.)	SLAT SPAN RANGE								
	0'–4' †	> 4'–5' †	> 5'–6' †	> 6'–7' †	> 7'–9' †	> 9'–12' †	> 12'–16' †	> 16'–20' †	> 20'–24' †
≤ 30.0	8"	8"	8"	8"	8"	8"	7"	5"	4"
>31–40	8"	8"	8"	8"	8"	8"	5"	4"	3 3/4"
>41–60	8"	8"	8"	8"	8"	6"	4"	–	–
>61–80	8"	8"	8"	8"	8"	4"	4"	–	–
>81–105	8"	8"	8"	8"	5 3/4"	4"	–	–	–
>106–120	8"	8"	8"	8"	4 3/4"	4"	–	–	–
>121–140	8"	8"	8"	8"	4 3/4"	–	–	–	–
>141–160	8"	8"	8"	6 1/2"	4 3/4"	–	–	–	–

SIDE RAIL MAX. ANCHOR'S SPACING FOR INSIDE MOUNT & MAXIMUM DESIGN LOAD RANGE & SLAT SPAN RANGE †

MAXIMUM DESIGN LOAD RANGE (p.s.f.)	SLAT SPAN RANGE								
	0'–4' †	> 4'–5' †	> 5'–6' †	> 6'–7' †	> 7'–9' †	> 9'–12' †	> 12'–16' †	> 16'–20' †	> 20'–24' †
≤ 30.0	4"	4"	4"	4"	4"	4"	4"	4"	4"
>31–40	4"	4"	4"	4"	4"	4"	4"	3 3/4"	3 3/4"
>41–60	4"	4"	4"	4"	4"	4"	3 3/4"	–	–
>61–80	4"	4"	4"	4"	4"	3 3/4"	3 3/4"	–	–
>81–105	4"	4"	4"	4"	4"	3 3/4"	–	–	–
>106–120	4"	4"	4"	4"	3 3/4"	3 3/4"	–	–	–
>121–140	4"	4"	4"	4"	3 3/4"	–	–	–	–
>141–160	4"	4"	4"	4"	3 3/4"	–	–	–	–

SIDE RAIL MAX. ANCHOR'S SPACING FOR BUILD-OUT MOUNT & MAXIMUM DESIGN LOAD RANGE & SLAT SPAN RANGE †

MAXIMUM DESIGN LOAD RANGE (p.s.f.)	SLAT SPAN RANGE								
	0'–4' †	> 4'–5' †	> 5'–6' †	> 6'–7' †	> 7'–9' †	> 9'–12' †	> 12'–16' †	> 16'–20' †	> 20'–24' †
≤ 30.0	4"	4"	4"	4"	4"	4"	4"	3 3/4"	–
>31–40	4"	4"	4"	4"	4"	4"	3 3/4"	–	–
>41–60	4"	4"	4"	4"	4"	3 3/4"	–	–	–
>61–80	4"	4"	4"	4"	4"	3 3/4"	–	–	–
>81–105	4"	4"	4"	4"	3 3/4"	–	–	–	–
>106–120	4"	4"	4"	4"	3 3/4"	–	–	–	–
>121–140	4"	4"	4"	4"	3 3/4"	–	–	–	–
>141–160	4"	4"	4"	4"	3 3/4"	–	–	–	–

ANCHOR'S TYPE LEGEND
5/16"ø TAPCON XL TO POURED CONCRETE OR GROUT FILLED CELL CONCRETE BLOCK WALL

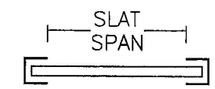

SLAT SPAN DEFINITION

† NOTE:
MAX. SPAN FOR SLAT FOR A GIVEN DESIGN LOAD SHALL NEVER EXCEED MAX. SLAT SPAN INDICATED ON SLAT PERFORMANCE CHART ON SHEET 9.

9/17/07
07-0828.11

F.B.C. (High Velocity Hurricane Zone)

AUG 29 2007

© 2007 TILTECO INC.

TILTECO INC.
TILLIT TESTING & ENGINEERING COMPANY
6355 N.W. 36th. St., Ste. 305 – VIRGINIA GARDENS, Fl. 33166
Phone : (305) 871–1530 , Fax : (305) 871–1531
e–mail: tilteco@aol.com
EB–0006719
WALTER A. TILLIT Jr., P. E.
FLORIDA Lic. # 44167

HIGH IMPACT 50mm SLAT
ALUMINUM ROLL-UP DOOR

GENERAL IMPACT GLASS AND WINDOWS, CORP.
(C.Q.I.P.A. # 1)
7840 N.W. 64 STREET
MIAMI, FL. 33166
PH:(305)558–8103, FAX:(305)558–6665

REV. No	DESCRIPTION	DATE	REV. No	DESCRIPTION	DATE
1			3		
2			4		

DRAWN BY: F.P.
08/22/07 DATE
07–214 DRAWING No
SHEET 10 OF 12

FLOOR TO CEILING / TRAPPED MOUNTING
END & INTERIOR MULLION MAX. SPAN (ft) SCHEDULE.
FOR A MAXIMUM DESIGN LOAD (p.s.f.), & A GIVEN MULLION SPACING (ft) *

MAXIMUM DESIGN LOAD (p.s.f.)	MAXIMUM MULLION SPACING (FT) *	MAXIMUM MULLION SPAN (FT)									
		(L) 4"x6"x1/4" MULLION				(L1) 4"x8"x1/4" MULLION				(L2) 6"x6"x5/16"x1/2" MULLION	
		ORIENTATION #1 (▭)		ORIENTATION #2 (▯)		ORIENTATION #1 (▭)		ORIENTATION #2 (▯)		ORIENTATION #1 **	
		END	INTERIOR	END	INTERIOR	END	INTERIOR	END	INTERIOR	END	INTERIOR
30.0	24'-0"	6'-9"	7'-11"	5'-9"	9'-10"	8'-0"	8'-8"	6'-3"	12'-0"	9'-3"	12'-0"
35.0	22'-5"	6'-9"	7'-9"	5'-9"	9'-7"	8'-0"	8'-5"	6'-3"	12'-0"	9'-3"	11'-9"
40.0	20'-3"	6'-9"	7'-8"	5'-9"	9'-6"	8'-0"	8'-4"	6'-3"	12'-0"	9'-4"	11'-7"
45.0	18'-6"	6'-9"	7'-7"	5'-10"	9'-5"	8'-0"	8'-3"	6'-3"	11'-11"	9'-5"	11'-6"
50.0	17'-1"	6'-9"	7'-6"	5'-10"	9'-4"	8'-1"	8'-2"	6'-4"	11'-9"	9'-5"	11'-5"
55.0	15'-11"	6'-10"	7'-5"	5'-10"	9'-3"	8'-1"	8'-1"	6'-5"	11'-8"	9'-6"	11'-4"
60.0	14'-11"	6'-10"	7'-5"	5'-11"	9'-2"	8'-1"	8'-0"	6'-5"	11'-7"	9'-6"	11'-3"
65.0	14'-1"	6'-10"	7'-4"	5'-11"	9'-1"	8'-1"	8'-0"	6'-5"	11'-6"	9'-7"	11'-2"
70.0	13'-4"	6'-11"	7'-3"	5'-11"	9'-0"	8'-2"	7'-11"	6'-6"	11'-5"	9'-8"	11'-1"
75.0	12'-8"	6'-11"	7'-3"	6'-0"	9'-0"	8'-2"	7'-10"	6'-6"	11'-4"	9'-8"	11'-0"
80.0	12'-1"	6'-11"	7'-2"	6'-0"	8'-11"	8'-2"	7'-10"	6'-7"	11'-4"	9'-9"	10'-11"
85.0	11'-7"	6'-11"	7'-2"	6'-1"	8'-10"	8'-3"	7'-9"	6'-7"	11'-3"	9'-10"	10'-11"
90.0	11'-2"	6'-11"	7'-1"	6'-1"	8'-10"	8'-3"	7'-9"	6'-7"	11'-2"	9'-10"	10'-10"
95.0	10'-9"	7'-0"	7'-1"	6'-1"	8'-9"	8'-3"	7'-8"	6'-8"	11'-1"	9'-11"	10'-9"
100.0	10'-4"	7'-0"	7'-0"	6'-2"	8'-9"	8'-3"	7'-8"	6'-8"	11'-1"	9'-11"	10'-8"
105.0	10'-0"	7'-0"	7'-0"	6'-2"	8'-8"	8'-4"	7'-7"	6'-9"	11'-0"	10'-0"	10'-8"
110.0	9'-8"	7'-1"	7'-0"	6'-3"	8'-7"	8'-4"	7'-7"	6'-9"	10'-11"	10'-1"	10'-7"
115.0	9'-5"	7'-1"	6'-11"	6'-3"	8'-7"	8'-4"	7'-6"	6'-9"	10'-11"	10'-1"	10'-7"
120.0	9'-2"	7'-1"	6'-11"	6'-3"	8'-6"	8'-4"	7'-6"	6'-10"	10'-10"	10'-2"	10'-6"
125.0	8'-11"	7'-2"	6'-10"	6'-4"	8'-6"	8'-4"	7'-6"	6'-10"	10'-9"	10'-2"	10'-5"
130.0	8'-8"	7'-2"	6'-10"	6'-4"	8'-6"	8'-5"	7'-5"	6'-11"	10'-9"	10'-3"	10'-5"
135.0	8'-6"	7'-2"	6'-9"	6'-4"	8'-5"	8'-5"	7'-5"	6'-11"	10'-8"	10'-3"	10'-4"
140.0	8'-3"	7'-2"	6'-9"	6'-5"	8'-5"	8'-6"	7'-4"	7'-0"	10'-8"	10'-4"	10'-4"
145.0	8'-1"	7'-2"	6'-9"	6'-5"	8'-4"	8'-6"	7'-4"	7'-0"	10'-7"	10'-5"	10'-3"
150.0	7'-11"	7'-3"	6'-9"	6'-6"	8'-4"	8'-6"	7'-4"	7'-0"	10'-7"	10'-6"	10'-3"
155.0	7'-9"	7'-3"	6'-8"	6'-6"	8'-4"	8'-6"	7'-3"	7'-1"	10'-6"	10'-6"	10'-2"
160.0	7'-6"	7'-4"	6'-8"	6'-8"	8'-4"	8'-8"	7'-3"	7'-3"	10'-6"	10'-9"	10'-2"

9/17/07
07-0828.11

F.B.C. (High Velocity Hurricane Zone)

* MAXIMUM MULLION SPACING SHALL BE SUCH THAT SLAT SPAN SHALL NOT BE EXCEEDED.
** REQUIRES 5/16" MULLION THICKNESS ON THE EXTERIOR FACE OF MULLION IN CONTACT W/ SIDE RAIL (IA).

AUG 29 2007

© 2007 TILTECO INC.

TILTECO INC.
TILLIT TESTING & ENGINEERING COMPANY
6355 N.W. 36th. St., Ste. 305 – VIRGINIA GARDENS, Fl. 33166
Phone : (305) 871-1530 , Fax : (305) 871-1531
e-mail: tilteco@aol.com
EB-0006719
WALTER A. TILLIT Jr., P. E.
FLORIDA Lic. # 44167

HIGH IMPACT 50mm SLAT
ALUMINUM ROLL-UP DOOR

GENERAL IMPACT GLASS AND WINDOWS, CORP.
(C.Q.I.P.A. # 1)
7840 N.W. 64 STREET
MIAMI, FL. 33166
PH:(305)558-8103, FAX:(305)558-6665

REV. No	DESCRIPTION	DATE	REV. No	DESCRIPTION	DATE
1			3		
2			4		

DRAWN BY: F.P.
08/22/07 DATE
07-214 DRAWING No
SHEET 11 OF 12

FLOOR TO CEILING / TRAPPED AND WALL MOUNTING
END & INTERIOR MULLION MAX. SPAN (ft) SCHEDULE.
FOR A MAXIMUM DESIGN LOAD (p.s.f.), & A GIVEN MULLION SPACING (ft) *

MAXIMUM DESIGN LOAD (p.s.f.)	MAXIMUM MULLION SPACING (FT) *	MAXIMUM MULLION SPAN (FT)									
		(L) 4"x6"x1/4" MULLION				(L1) 4"x8"x1/4" MULLION				(L2) 6"x6"x5/16"x1/2" MULLION	
		ORIENTATION #1 (▭)		ORIENTATION #2 (▯)		ORIENTATION #1 (▭)		ORIENTATION #2 (▯)		ORIENTATION #1 **	
		END	INTERIOR	END	INTERIOR	END	INTERIOR	END	INTERIOR	END	INTERIOR
30.0	8'–0"	12'–0"	11'–6"	12'–0"	12'–0"	12'–0"	12'–0"	12'–0"	12'–0"	12'–0"	12'–0"
35.0	8'–0"	12'–0"	10'–11"	12'–0"	12'–0"	12'–0"	11'–10"	12'–0"	12'–0"	12'–0"	12'–0"
40.0	8'–0"	12'–0"	10'–5"	12'–0"	12'–0"	12'–0"	11'–4"	12'–0"	12'–0"	12'–0"	12'–0"
45.0	8'–0"	12'–0"	10'–0"	12'–0"	12'–0"	12'–0"	10'–11"	12'–0"	12'–0"	12'–0"	12'–0"
50.0	8'–0"	12'–0"	9'–7"	12'–0"	12'–0"	12'–0"	10'–6"	12'–0"	12'–0"	12'–0"	12'–0"
55.0	8'–0"	11'–10"	9'–4"	12'–0"	11'–5"	12'–0"	10'–2"	12'–0"	12'–0"	12'–0"	12'–0"
60.0	8'–0"	11'–6"	9'–1"	12'–0"	11'–3"	12'–0"	9'–11"	12'–0"	12'–0"	12'–0"	12'–0"
65.0	8'–0"	11'–2"	8'–10"	11'–3"	11'–0"	12'–0"	9'–8"	12'–0"	12'–0"	12'–0"	12'–0"
70.0	8'–0"	10'–11"	8'–8"	10'–4"	10'–8"	11'–10"	9'–5"	11'–3"	12'–0"	12'–0"	12'–0"
75.0	8'–0"	10'–8"	8'–5"	9'–9"	10'–6"	11'–7"	9'–2"	10'–7"	12'–0"	12'–0"	12'–0"
80.0	8'–0"	10'–5"	8'–3"	9'–3"	10'–3"	11'–4"	9'–0"	10'–0"	12'–0"	12'–0"	12'–0"
85.0	8'–0"	10'–2"	8'–1"	8'–10"	10'–0"	11'–1"	8'–10"	9'–5"	12'–0"	12'–0"	12'–0"
90.0	8'–0"	10'–0"	7'–11"	8'–5"	9'–10"	10'–11"	8'–8"	9'–2"	12'–0"	12'–0"	12'–0"
95.0	8'–0"	9'–9"	7'–10"	8'–1"	9'–8"	10'–8"	8'–6"	8'–11"	12'–0"	12'–0"	11'–10"
100.0	8'–0"	9'–5"	7'–8"	7'–11"	9'–6"	10'–6"	8'–4"	8'–7"	12'–0"	12'–0"	11'–8"
105.0	8'–0"	9'–1"	7'–6"	7'–8"	9'–4"	10'–4"	8'–2"	8'–4"	11'–10"	12'–0"	11'–6"
110.0	8'–0"	8'–9"	7'–5"	7'–6"	9'–2"	10'–2"	8'–1"	8'–2"	11'–8"	11'–7"	11'–4"
115.0	8'–0"	8'–6"	7'–4"	7'–4"	9'–1"	10'–0"	7'–11"	7'–11"	11'–6"	10'–10"	11'–2"
120.0	8'–0"	8'–3"	7'–2"	7'–2"	8'–11"	9'–8"	7'–10"	7'–9"	11'–4"	10'–2"	11'–0"
125.0	8'–0"	8'–0"	7'–1"	7'–0"	8'–10"	9'–5"	7'–9"	7'–7"	11'–1"	–	10'–10"
130.0	8'–0"	7'–10"	7'–0"	6'–10"	8'–8"	9'–2"	7'–8"	7'–2"	11'–0"	–	10'–8"
135.0	8'–0"	7'–8"	6'–11"	6'–9"	8'–7"	9'–0"	7'–6"	–	10'–11"	–	10'–7"
140.0	8'–0"	7'–5"	6'–10"	6'–7"	8'–6"	8'–9"	7'–5"	–	10'–9"	–	10'–5"
145.0	8'–0"	7'–3"	6'–9"	6'–6"	8'–5"	8'–7"	7'–4"	–	10'–8"	–	10'–4"
150.0	–	–	–	–	–	–	–	–	–	–	–
155.0	–	–	–	–	–	–	–	–	–	–	–
160.0	–	–	–	–	–	–	–	–	–	–	–

9/17/07
07-0828.11

F.B.C. (High Velocity Hurricane Zone)

* MAXIMUM MULLION SPACING SHALL BE SUCH THAT SLAT SPAN SHALL NOT BE EXCEEDED.
** REQUIRES 5/16" MULLION THICKNESS ON THE EXTERIOR FACE OF MULLION IN CONTACT W/ SIDE RAIL (IA).
- SEE MAX. MULLION SPANS FOR SHORTER MULLION SPACING ON SCHEDULE ON SHEETS 11 & 12.

AUG 22 2007

© 2007 TILTECO INC.

TILTECO INC.
TILLIT TESTING & ENGINEERING COMPANY
6355 N.W. 36th. St., Ste. 305 – VIRGINIA GARDENS, FL 33166
Phone : (305) 871-1530 , Fax : (305) 871-1531
e-mail: tilteco@aol.com
EB-0006719
WALTER A. TILLIT Jr., P. E.
FLORIDA Lic. # 44167

HIGH IMPACT 50mm SLAT
ALUMINUM ROLL-UP DOOR

GENERAL IMPACT GLASS AND WINDOWS, CORP.
(C.Q.I.P.A. # 1)
7840 N.W. 64 STREET
MIAMI, FL. 33166
PH:(305)558-8103, FAX:(305)558-6665

REV. No	DESCRIPTION	DATE	REV. No	DESCRIPTION	DATE
1			3		
2			4		

DRAWN BY: F.P.
08/22/07 DATE
07-214 DRAWING No
SHEET 11A OF 12

WALL MOUNTING
END & INTERIOR MULLION MAX. SPAN (ft) SCHEDULE.
FOR A MAXIMUM DESIGN LOAD (p.s.f.), & A GIVEN MULLION SPACING (ft) *

MAXIMUM DESIGN LOAD (p.s.f.)	MAXIMUM MULLION SPACING (FT) *	MAXIMUM MULLION SPAN (FT)									
		(L) 4"x6"x1/4" MULLION				(L1) 4"x8"x1/4" MULLION				(L2) 6"x6"x5/16"x1/2" MULLION	
		ORIENTATION #1 (▭)		ORIENTATION #2 ([])		ORIENTATION #1 (▭)		ORIENTATION #2 ([])		ORIENTATION #1 **	
		END	INTERIOR	END	INTERIOR	END	INTERIOR	END	INTERIOR	END	INTERIOR
30.0	24'-0"	6'-9"	7'-11"	5'-5"	9'-10"	7'-8"	8'-8"	4'-8"	12'-0"	6'-0"	12'-0"
35.0	22'-5"	6'-9"	7'-9"	5'-5"	9'-7"	7'-8"	8'-5"	4'-8"	12'-0"	6'-0"	11'-9"
40.0	20'-3"	6'-9"	7'-8"	5'-6"	9'-6"	7'-8"	8'-4"	4'-8"	12'-0"	6'-1"	11'-7"
45.0	18'-6"	6'-9"	7'-7"	5'-7"	9'-5"	7'-10"	8'-3"	4'-9"	11'-11"	6'-2"	11'-6"
50.0	17'-1"	6'-9"	7'-6"	5'-8"	9'-4"	7'-11"	8'-2"	4'-10"	11'-9"	6'-3"	11'-5"
55.0	15'-11"	6'-10"	7'-5"	5'-9"	9'-3"	8'-0"	8'-1"	4'-11"	11'-8"	6'-4"	11'-4"
60.0	14'-11"	6'-10"	7'-5"	5'-10"	9'-2"	8'-1"	8'-0"	4'-11"	11'-7"	6'-5"	11'-3"
65.0	14'-1"	6'-10"	7'-4"	5'-11"	9'-1"	8'-1"	8'-0"	5'-0"	11'-6"	6'-5"	11'-2"
70.0	13'-4"	6'-11"	7'-3"	5'-11"	9'-0"	8'-2"	7'-11"	5'-1"	11'-5"	6'-6"	11'-1"
75.0	12'-8"	6'-11"	7'-3"	6'-0"	9'-0"	8'-2"	7'-10"	5'-2"	11'-4"	6'-7"	11'-0"
80.0	12'-1"	6'-11"	7'-2"	6'-0"	8'-11"	8'-2"	7'-10"	5'-2"	11'-4"	6'-8"	10'-11"
85.0	11'-7"	6'-11"	7'-2"	6'-1"	8'-10"	8'-3"	7'-9"	5'-3"	11'-3"	6'-9"	10'-11"
90.0	11'-2"	6'-11"	7'-1"	6'-1"	8'-10"	8'-3"	7'-9"	5'-3"	11'-2"	6'-9"	10'-10"
95.0	10'-9"	7'-0"	7'-1"	6'-1"	8'-9"	8'-3"	7'-8"	5'-4"	11'-1"	6'-10"	10'-9"
100.0	10'-4"	7'-0"	7'-0"	6'-2"	8'-9"	8'-3"	7'-8"	5'-5"	11'-1"	7'-0"	10'-8"
105.0	10'-0"	7'-0"	7'-0"	6'-2"	8'-8"	8'-4"	7'-7"	5'-6"	11'-0"	7'-1"	10'-8"
110.0	9'-8"	7'-1"	7'-0"	6'-3"	8'-7"	8'-4"	7'-7"	5'-7"	10'-11"	7'-2"	10'-7"
115.0	9'-5"	7'-1"	6'-11"	6'-3"	8'-7"	8'-4"	7'-6"	5'-8"	10'-11"	7'-2"	10'-7"
120.0	9'-2"	7'-1"	6'-11"	6'-3"	8'-6"	8'-4"	7'-6"	5'-8"	10'-10"	7'-3"	10'-6"
125.0	8'-11"	7'-2"	6'-10"	6'-4"	8'-6"	8'-4"	7'-6"	5'-9"	10'-9"	7'-4"	10'-5"
130.0	8'-8"	7'-2"	6'-10"	6'-4"	8'-6"	8'-5"	7'-5"	5'-10"	10'-9"	7'-5"	10'-5"
135.0	8'-6"	7'-2"	6'-9"	6'-4"	8'-5"	8'-5"	7'-5"	5'-10"	10'-8"	7'-5"	10'-4"
140.0	8'-3"	7'-2"	6'-9"	6'-5"	8'-5"	8'-6"	7'-4"	6'-0"	10'-8"	7'-7"	10'-4"
145.0	8'-1"	7'-2"	6'-9"	6'-5"	8'-4"	8'-6"	7'-4"	6'-0"	10'-7"	7'-8"	10'-3"
150.0	7'-11"	7'-3"	6'-9"	6'-6"	8'-4"	8'-6"	7'-4"	6'-1"	10'-7"	7'-8"	10'-3"
155.0	7'-9"	7'-3"	6'-8"	6'-6"	8'-4"	8'-6"	7'-3"	6'-1"	10'-6"	7'-10"	10'-2"
160.0	7'-6"	7'-4"	6'-8"	6'-8"	8'-4"	8'-8"	7'-3"	6'-6"	10'-6"	8'-2"	10'-2"

AUG 23 2007

9/17/07
07-0828.11

F.B.C. (High Velocity Hurricane Zone)

* MAXIMUM MULLION SPACING SHALL BE SUCH THAT SLAT SPAN SHALL NOT BE EXCEEDED.
** REQUIRES 5/16" MULLION THICKNESS ON THE EXTERIOR FACE OF MULLION IN CONTACT W/ SIDE RAIL (IA).

© 2007 TILTECO INC.

TILTECO INC.
TILLIT TESTING & ENGINEERING COMPANY
6355 N.W. 36th. St., Ste. 305 – VIRGINIA GARDENS, Fl. 33166
Phone : (305) 871-1530 , Fax : (305) 871-1531
e-mail: tilteco@aol.com
EB-0006719
WALTER A. TILLIT Jr., P. E.
FLORIDA Lic. # 44167

HIGH IMPACT 50mm SLAT
ALUMINUM ROLL-UP DOOR

GENERAL IMPACT GLASS AND WINDOWS, CORP.
(C.Q.I.P.A. # 1)
7840 N.W. 64 STREET
MIAMI, FL. 33166
PH:(305)558-8103, FAX:(305)558-6665

REV. No	DESCRIPTION	DATE	REV. No	DESCRIPTION	DATE
1			3		
2			4		

DRAWN BY: F.P.
08/22/07 DATE
07-214 DRAWING No
SHEET 12 OF 12