MIAMI-DADE COUNTY

BUILDING CODE COMPLIANCE OFFICE (BCCO)
PRODUCT CONTROL DIVISION

MIAMI-DADE COUNTY, FLORIDA
METRO-DADE FLAGLER BUILDING
140 WEST FLAGLER STREET, SUITE 1603
MIAMI, FLORIDA 33130-1563
(305) 375-2901 FAX (305) 375-2908
www.buildingcodeonline.com

NOTICE OF ACCEPTANCE (NOA)

Ingersoll-Rand
6810 Hillsdale Court
Indianapolis, IN 46250

SCOPE:

This NOA is being issued under the applicable rules and regulations governing the use of construction materials. The documentation submitted has been reviewed by Miami-Dade County Product Control Division and accepted by the Board of Rules and Appeals (BORA) to be used in Miami Dade County and other areas where allowed by the Authority Having Jurisdiction (AHJ).

This NOA shall not be valid after the expiration date stated below. The Miami-Dade County Product Control Division (In Miami Dade County) and/or the AHJ (in areas other than Miami Dade County) reserve the right to have this product or material tested for quality assurance purposes. If this product or material fails to perform in the accepted manner, the manufacturer will incur the expense of such testing and the AHJ may immediately revoke, modify, or suspend the use of such product or material within their jurisdiction. BORA reserves the right to revoke this acceptance, if it is determined by Miami-Dade County Product Control Division that this product or material fails to meet the requirements of the applicable building code.

This product is approved as described herein, and has been designed to comply with the Florida Building Code, including the High Velocity Hurricane Zone.

DESCRIPTION: IR Series Single Flush Outswing Commercial Steel Doors w / wo Panic Exit Devices

APPROVAL DOCUMENT: Drawing No "**IRF-S07**", titled "Flush Outswing Doors", sheets 1 through 11 of 11, prepared by the manufacturer, dated 05-27-07 and last revised on 06/16/08 (sheets 1 thru 11 except 4 & 5) and sheets 4 & 5 revised on 07/17/08), all signed and sealed by Thomas Gordon, P.E., bearing the Miami-Dade County Product Control approval stamp with the Notice of Acceptance number and approval date by the Miami-Dade County Product Control Division.

MISSILE IMPACT RATING: Large Missile Impact Resistant

Limitation:

1. See Design pressure & Water infiltration limitation sheet 2 of the drawings
2. Electrical/Electronic function is not part of this approval, such functions to be reviewed and approved by AHJ.

LABELING: Each unit shall bear a permanent label with the manufacturer's name or logo, city, state and following statement: "Miami-Dade County Product Control Approved", unless otherwise noted herein.

RENEWAL of this NOA shall be considered after a renewal application has been filed and there has been no change in the applicable building code negatively affecting the performance of this product.

TERMINATION of this NOA will occur after the expiration date or if there has been a revision or change in the materials, use, and/or manufacture of the product or process. Misuse of this NOA as an endorsement of any product, for sales, advertising or any other purposes shall automatically terminate this NOA. Failure to comply with any section of this NOA shall be cause for termination and removal of NOA.

ADVERTISEMENT: The NOA number preceded by the words Miami-Dade County, Florida, and followed by the expiration date may be displayed in advertising literature. If any portion of the NOA is displayed, then it shall be done in its entirety.

INSPECTION: A copy of this entire NOA shall be provided to the user by the manufacturer or its distributors and shall be available for inspection at the job site at the request of the Building Official.

This NOA **revises** NOA # **03-0908.03, 04-0203.03** and **05-0103.01** consists of this page 1 and evidence pages E1, E-2, as well as approval document mentioned above.

The submitted documentation was reviewed by **Ishaq I. Chanda, P.E.**

MIAMI-DADE COUNTY APPROVED

8/21/8

NOTICE OF ACCEPTANCE: EVIDENCE SUBMITTED

E. MATERIAL CERTIFICATIONS (continue)

3. Test Report No. **03NK2370/R145081**, January 21, 2003, issued by Underwriters laboratories Inc for "Surface Burning Characteristics of Building material" per ASTME84-00a and self Ignition per ASTM1929D for "Elfoam H200", issued to Elliott Co. of Indianapolis Inc.
4. Tensile Test report No. A103W1-Test 1, 2 & 3 dated 23 APR 03 per ASTME-8 for steel face sheet, prepared by Certified Testing laboratory, signed and sealed by Ramesh Patel, P.E.
5. Test Report No. **NER-384**, reissued dated May 01, 1994, issued by National Evaluation Service Inc to Huntsman Chemical Corporation for "Expanded Polystyrene EPS" for grade 86 & grade 54 for "Surface Burning Characteristics of Building material" per ASTME 84.
6. Test Report No. **9691**, dated August 28, 1987, 1994, issued by United Testing Company Inc. to Huntsman Chemical Corporation for "Expanded Polystyrene EPS" for grade 86 & 54 for "Self Ignition Temperature Test" per ASTMD-1929.

F. STATEMENTS

1. Letter of conformance & "No financial interest" dated June 08, 2008, signed and sealed by Gordon Thomas, P.E.
2. Laboratory Statement of compliance, part of the above referenced test reports

G. OTHER

1. This NOA consolidates NOA #(s) 02-0712.01, 02-0712.03, 03-0908.03, 04-0203.03, 04-0303.03 and 05-0103.01, expiring May 05, 2010.
2. Consolidation Test proposal # **06-2468**, dated 04/27/07 approved by BCCO.
3. IR Locks & Panic devices brochures / catalogs supplied by manufacturer.

Ishaq I. Chanda

Ishaq I Chanda, P.E.
Product Control Examiner
NOA No 07-0829.04
Expiration Date: May 05, 2010
Approval Date: August 21, 2008

NOTICE OF ACCEPTANCE: EVIDENCE SUBMITTED

A. DRAWINGS

1. Manufacturer's parts and sections drawings.
2. Drawing No "**IRF-S07**", titled "Flush Outswing Doors", sheets 1 through 11 of 11, prepared by the manufacturer, dated 05-27-07 and last revised on 06/16/08 (sheets 1 thru 11 except 4 & 5) and sheets 4 & 5 revised on 07/17/08), all signed and sealed by Thomas Gordon, P.E.

B. TESTS (Photo copies from files # listed below), some of the original test reports conducted per SFBC 201, 202 & 203-94, now termed as FBC, TAS 201, 202 & 203-94).

1. Test report on
   1) Air Infiltration Test, per TAS 202-94
   2) Uniform Static Air Pressure Test, Loading per TAS 202-94
   3) Large Missile Impact Test per FBC, TAS 201-94
   4) Cyclic Wind Pressure Loading per FBC, TAS 203-94
   5) Forced Entry Test, per PA 202-94

   Along with manufacturer's parts and section drawings of single Flush outswing steel doors, marked by Certified Testing Lab, Test Reports No(s). **CTLA-776W** dated February 20, 2002, **CTLA-776W1** dated April 25, 2002, **CTLA-776W-2, 3** dated April 20, 2002, **CTLA-1035W-2** dated Feb. 11, 2003, **CTLA-1086-W** dated Nov. 17, 2003, **CTLA –1107W-3** dated Aug. 05, 2003, all signed and sealed by Ramesh Patel, P.E.
2. Additional test reports
   1) Uniform Static Air Pressure Test, Loading per FBC TAS 202-94.
   2) Water Resistance Test per FBC TAS 202-94

   Along with marked-up drawings and installation diagram of double steel commercial doors, prepared by National Certified Testing Laboratories Inc., Test Report No. **NCTL-03-0514-11,** dated August 31, 2004 and **NCTL- 03-3511-1** dated 04/09/08, both signed and sealed by Gerry Ferrara, P. E.
3. Reference test report No. CTLA-1107W for strap anchor qualification.

C. CALCULATIONS:

1. Statement of compliance & anchor verification evaluation report, dated 04-23-2007 and last revised on 07/14/2008, prepared, signed & sealed by Thomas Gordon., P.E.

D. QUALITY ASSURANCE BY;

1. Miami-Dade County Building Code Compliance Office (BCCO).

E. MATERIAL CERTIFICATIONS (Photo copies from files # listed below)

1. Tensile test report # CTLA-776W (0194H), dtd 02/25/02 prepared by CTL Architectural Division, sheet samples, tested per ASTM E8, signed & sealed by Ramesh Patel, P.E.
2. Tensile Test report No. A103W1-Test 1, 2 & 3 dated 23 APR 03 per ASTME-8 for steel face sheet, prepared by Certified Testing laboratory, signed and sealed by Ramesh Patel, P.E.

Ishaq I. Chanda

Ishaq I Chanda, P.E.
Product Control Examiner
NOA No 07-0829.04
Expiration Date: May 05, 2010
Approval Date: August 21, 2008

MORTISE LOCKSET WITH DEADBOLT FUNCTION

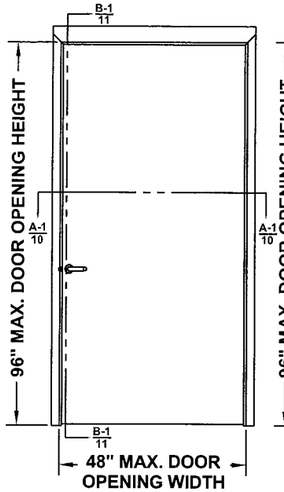

1	DESIGN PRESSURE RATING, PSF	
	WHERE WATER INFILTRATION REQUIREMENT IS NEEDED	WHERE WATER INFILTRATION REQUIREMENT IS NOT NEEDED
	±75/±50 SEE TABLE 3 ON SHT. 5	±75 SEE TABLE 4 ON SHT. 5

CYLINDRICAL LOCKSET 1/2" THROW LATCH

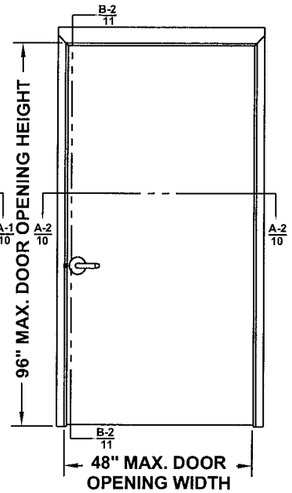

2	DESIGN PRESSURE RATING, PSF	
	WHERE WATER INFILTRATION REQUIREMENT IS NEEDED	WHERE WATER INFILTRATION REQUIREMENT IS NOT NEEDED
	±55/±50 SEE TABLE 3 ON SHT. 5	±55 SEE TABLE 4 ON SHT. 5

CYLINDRICAL LOCKSET 1/2" THROW LATCH

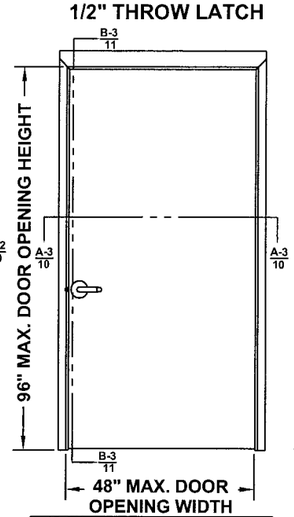

3	DESIGN PRESSURE RATING, PSF	
	WHERE WATER INFILTRATION REQUIREMENT IS NEEDED	WHERE WATER INFILTRATION REQUIREMENT IS NOT NEEDED
	±65/±50 SEE TABLE 3 ON SHT. 5	±65 SEE TABLE 4 ON SHT. 5

CYLINDRICAL LOCKSET 3/4" THROW LATCH

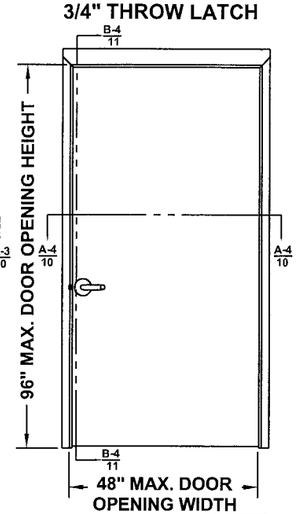

4	DESIGN PRESSURE RATING, PSF	
	WHERE WATER INFILTRATION REQUIREMENT IS NEEDED	WHERE WATER INFILTRATION REQUIREMENT IS NOT NEEDED
	±75/±50 SEE TABLE 3 ON SHT. 5	±75 SEE TABLE 4 ON SHT. 5

SURFACE VERTICAL ROD EXIT DEVICE

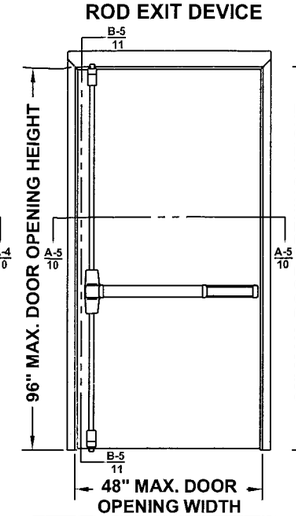

5	DESIGN PRESSURE RATING, PSF	
	WHERE WATER INFILTRATION REQUIREMENT IS NEEDED	WHERE WATER INFILTRATION REQUIREMENT IS NOT NEEDED
	±70/±50 SEE TABLE 3 ON SHT. 5	±70 SEE TABLE 4 ON SHT. 5

CONCEALED VERTICAL ROD EXIT DEVICE

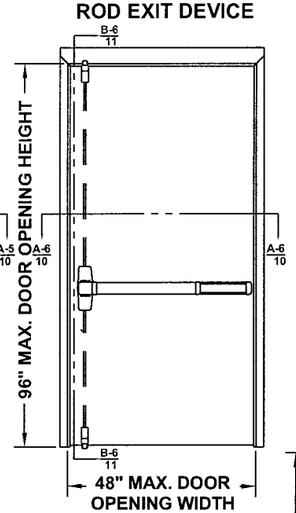

6	DESIGN PRESSURE RATING, PSF	
	WHERE WATER INFILTRATION REQUIREMENT IS NEEDED	WHERE WATER INFILTRATION REQUIREMENT IS NOT NEEDED
	±70/±50 SEE TABLE 3 ON SHT. 5	±70 SEE TABLE 4 ON SHT. 5

CYLINDRICAL DEADLOCK

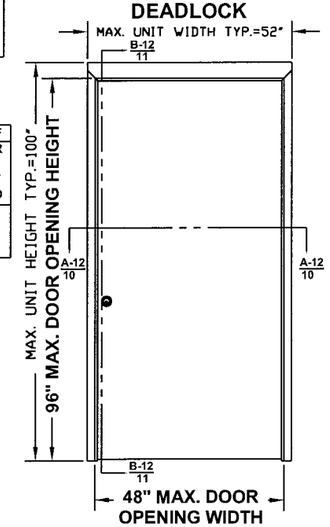

12	DESIGN PRESSURE RATING, PSF	
	WHERE WATER INFILTRATION REQUIREMENT IS NEEDED	WHERE WATER INFILTRATION REQUIREMENT IS NOT NEEDED
	±60/±50 SEE TABLE 3 ON SHT. 5	±60 SEE TABLE 4 ON SHT. 5

REVISIONS

LTR	DESCRIPTION		DATE	APPROVED
A	APPROVAL DWG	YMF	05/20/07	
B	REVISED DWG	RAP	10/11/07	
C	REVISED DWG	RAP	12/10/07	
D	REVISED DWG	YMF	01/04/08	
E	REVISED DWG	YMF	03/31/08	
F	REVISED DWG	YMF	06/02/08	

6/16/08
FL 40718

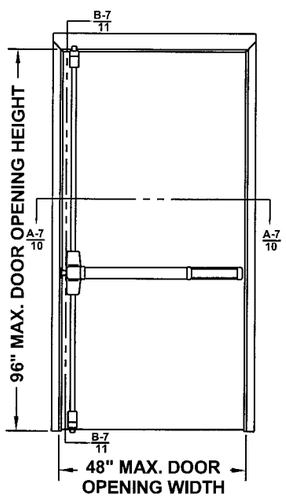

7	DESIGN PRESSURE RATING, PSF	
	WHERE WATER INFILTRATION REQUIREMENT IS NEEDED	WHERE WATER INFILTRATION REQUIREMENT IS NOT NEEDED
	±70/±50 SEE TABLE 3 ON SHT. 5	±70 SEE TABLE 4 ON SHT. 5

THREE-POINT LATCHING EXIT DEVICE

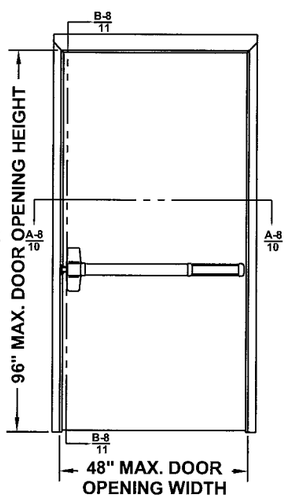

8	DESIGN PRESSURE RATING, PSF	
	WHERE WATER INFILTRATION REQUIREMENT IS NEEDED	WHERE WATER INFILTRATION REQUIREMENT IS NOT NEEDED
	±70/±50 SEE TABLE 3 ON SHT. 5	±70 SEE TABLE 4 ON SHT. 5

RIM EXIT DEVICE

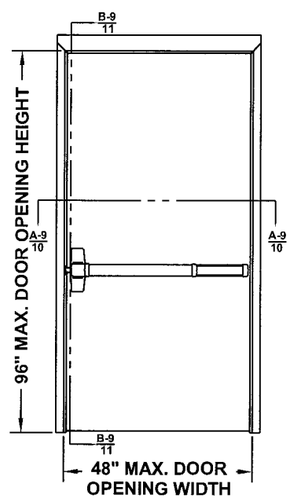

9	DESIGN PRESSURE RATING, PSF	
	WHERE WATER INFILTRATION REQUIREMENT IS NEEDED	WHERE WATER INFILTRATION REQUIREMENT IS NOT NEEDED
	±75/±50 SEE TABLE 3 ON SHT. 5	±100 SEE TABLE 4 ON SHT. 5

RIM EXIT DEVICE

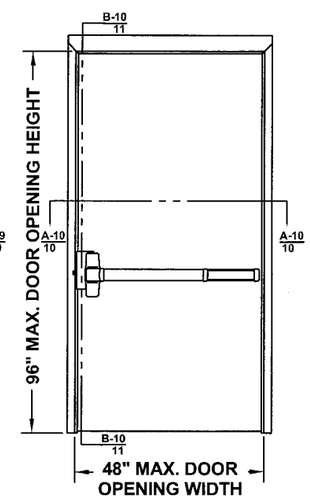

10	DESIGN PRESSURE RATING, PSF	
	WHERE WATER INFILTRATION REQUIREMENT IS NEEDED	WHERE WATER INFILTRATION REQUIREMENT IS NOT NEEDED
	±70/±50 SEE TABLE 3 ON SHT. 5	±70 SEE TABLE 4 ON SHT. 5

MORTISE EXIT DEVICE

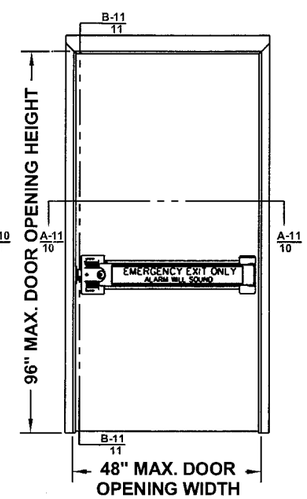

11	DESIGN PRESSURE RATING, PSF	
	WHERE WATER INFILTRATION REQUIREMENT IS NEEDED	WHERE WATER INFILTRATION REQUIREMENT IS NOT NEEDED
	±55/±50 SEE TABLE 3 ON SHT. 5	±55 SEE TABLE 4 ON SHT. 5

EXIT ALARM LOCK

PRODUCT REVISED
as complying with the Florida
Building Code
Acceptance No 07-0829.04
Expiration Date MAY 05, 2010
By Ishaq I. Chanda
Miami Dade Product Control
Division

NOTES:
1. INTERIOR VIEWS ARE SHOWN FOR ALL ELEVATIONS
2. SEE TABLE 1 ON SHEET 2 FOR HARDWARE APPLICATIONS
3. SEE SHEET 3 FOR HINGE REQUIREMENTS
4. SEE SHEET 4 FOR ANCHORING TYPES AND LIMITATIONS
5. SEE SHEET 5 FOR WEATHERSTRIPPING INSTALLATION AND DETAILS

BEND RADIUS

THIRD ANGLE PROJECTION

DRAWN	YMF	DATE 05/20/07
CHECKED		
APPROVED		
ENG. APPVL	JPD	10/11/07

Ingersoll Rand
Security Technologies

TITLE MIAMI-DADE PRODUCT APPROVAL
FLUSH OUTSWING DOORS AND HARDWARE CONFIGURATIONS
IR COMMERCIAL DOOR OPENING SINGLE FLUSH DOORS.

SIZE	FLAT	DWG NO.	REV
		IRFS07	F
SCALE: NTS	AUTOCAD		SHEET 1 of 11

Door Configuration	Maximum Design Pressure, PSF		Maximum Door Opening Size, in.		Locking Hardware Description				Comments
	Positive	Negative	Width	Height	Hardware Family	Model/Series	Strike Models	IR Brand	
1	75	75	48	96	Mortise Lock	L / LV9400	10-072	Schlage	functions with deadbolt
	75	75	48	96	Mortise Lock	M	ANSI	Falcon	functions with deadbolt
	75	75	48	96	Mortise Lock	5500	ANSI	Locknetics / Schlage	functions with deadbolt
2	55	55	48	96	Cylindrical Lock	AL	10-025	Schlage	1/2" throw latch
3	65	65	48	96	Cylindrical Lock	D/ND	10-025	Schlage	1/2" throw latch
4	75	75	48	96	Cylindrical Lock	D/ND	10-025	Schlage	3/4" throw latch
	75	75	48	96	Cylindrical Lock	T	ANSI	Falcon	3/4" throw latch
	75	75	48	96	Cylindrical Lock	5100	ANSI	Locknetics / Schlage	3/4" throw latch
5	70	70	48	96	Surface Vertical Rod Exit Device	98/9927(F)	299F/499F Top, 304L/248L4 Bottom	Von Duprin	
	70	70	48	96	Surface Vertical Rod Exit Device	(F)18-V	3788 Top, 2130 Bottom	Monarch	
6	70	70	48	96	Concealed Vertical Rod Exit Device	98/9947-F	338 Top, 385A Bottom	Von Duprin	
	70	70	48	96	Concealed Vertical Rod Exit Device	F-18-C	4188 Top, 2130 Bottom	Monarch	
7	70	70	48	96	Three-Point Latching Device	98/9957(F)	299F/499F Top/Middle, 304L/248L4 Bottom	Von Duprin	
8	70	70	48	96	Rim Exit Device	98/99(F)	299F/499F	Von Duprin	
	70	70	48	96	Rim Exit Device	88-F	268	Von Duprin	
	70	70	48	96	Rim Exit Device	(F)DL-18-R	F570	Monarch	
9	75/100 SEE NOTE 2.	75/100 SEE NOTE 2.	48	96	Rim Exit Device	XP98/99(F)	909/954	Von Duprin	
10	70	70	48	96	Mortise Exit Device	98/9975(F)	575	Von Duprin	
	70	70	48	96	Mortise Exit Device	8875(F)	575	Von Duprin	
	70	70	48	96	Mortise Exit Device	(F)18-M	1279	Monarch	
11	55	55	48	96	Exit Alarm Lock	2670 GUARD-X	267	Von Duprin	
12	60	60	48	96	Cyl. Deadlock	B600/700/800	10-055	Schlage	
	60	60	48	96	Cyl. Deadlock	D400/800	010018-000/001	Falcon	

TABLE 1.

NOTES:

1: SEE SHEETS 7, 8 & 9 FOR LOCKING HARDWARE.

2. . DOOR CONFIGURATION 9 IS RATED FOR MAXIMUM DESIGN PRESSURE ±100 PSF WHEN WATER INFILTRATION REQUIREMENT IS NOT NEEDED, WHEN WATER INFILTRATION REQUIREMENT IS NEEDED, IT IS RATED AT ±75 PSF WHEN USED WITH SEALS BY ZERO INT'L, AND ±50 PSF WHEN USED WITH SEALS BY NGP (SEE TABLE 3 ON SHT.5)

3. SCHLAGE AL-SERIES CYLINDRICAL LOCK IS LIMITED TO ±55 PSF MAXIMUM DESIGN PRESSURE

REVISIONS

LTR	DESCRIPTION			DATE	APPROVED
A	APPROVAL	DWG	YMF	05/20/07	
B	REVISED	DWG	RAP	10/11/07	
C	REVISED	DWG	RAP	12/10/07	
D	REVISED	DWG	YMF	01/04/08	
E	REVISED	DWG	YMF	03/31/08	
F	REVISED	DWG	YMF	06/02/08	

6/16/08
FL 46718

PRODUCT REVISED
as complying with the Florida
Building Code
Acceptance No. 07-0829.04
Expiration Date 17 MAY 05, 2010
By Ishaq I. Uhand
Miami Dade Product Control
Division

BEND RADIUS

THIRD ANGLE PROJECTION

DRAWN YMF	DATE 05/20/07
CHECKED	
APPROVED	
ENG. APPVL JPD	10/11/07

Ingersoll Rand
Security Technologies

TITLE MIAMI-DADE PRODUCT APPROVAL

FLUSH OUTSWING DOORS AND HARDWARE CONFIGURATIONS
IR COMMERCIAL DOOR OPENING SINGLE FLUSH DOORS.

SIZE	FLAT	DWG NO.	REV
		IRFS07	F

SCALE: NTS | AUTOCAD | SHEET 2 of 11

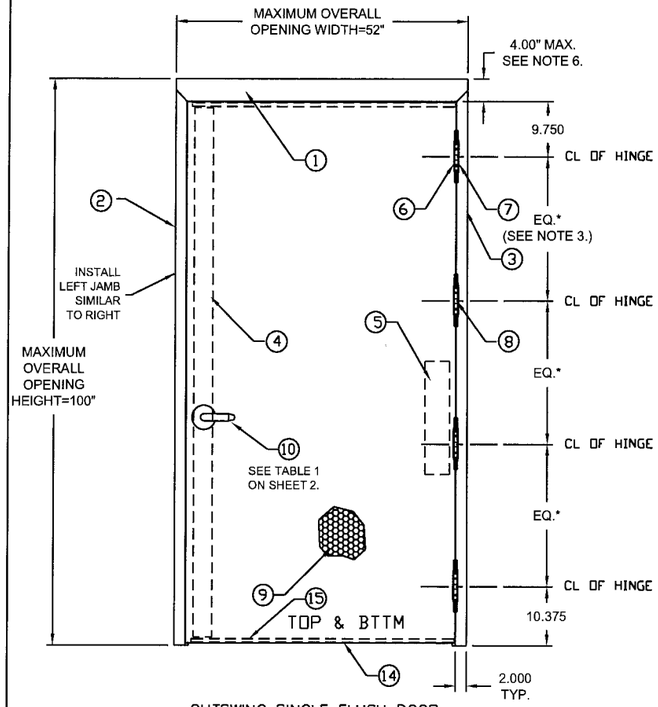

OUTSWING SINGLE FLUSH DOOR
(EXTERIOR VIEW)
ALL DIMENSIONS TYPICAL, UNLESS SPECIFIED OTHERWISE

DOOR VIEW

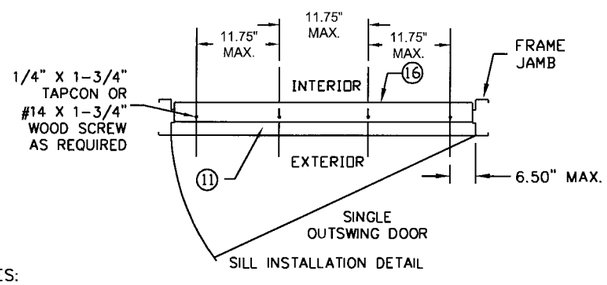

SILL INSTALLATION DETAIL

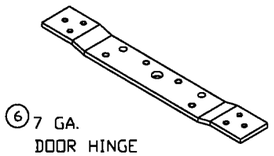

⑥ 7 GA. DOOR HINGE REINFORCEMENT

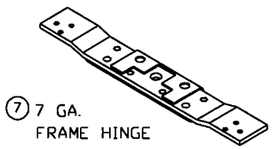

⑦ 7 GA. FRAME HINGE REINFORCEMENT

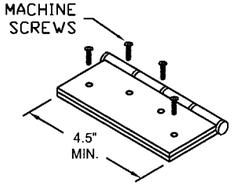

⑧ BUTT HINGE
MIN SIZE 4.5" X 4.5" STD. WT. (.134" MIN.)
IVES 5BB1/3CB1
HAGER 1279
STANLEY F179/1900

⑧ CONTINUOUS HINGE
IVES 112HD, 224HD, 600 & 700 SERIES
STANLEY 661HD
SELECT SL11HD
HAGER 790-900 & 780-224HD
MARKAR FM-300 & HG305
ABH A500 & A240HD

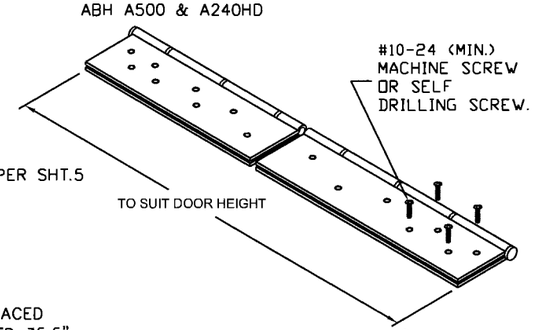

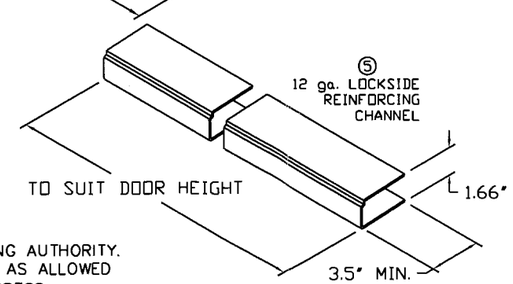

PRODUCT REVISED
as complying with the Florida Building Code
Acceptance No. 07-0829.04
Expiration Date MAY 05 2010
By Ishaq I. Chanda
Miami Dade Product Control Division

REVISIONS

LTR	DESCRIPTION		DATE	APPROVED
A	APPROVAL DWGS.	YMF	05/20/07	
B	REVISED DWGS.	RAP	10/11/07	
C	REVISED DWGS.	RAP	12/10/07	
D	REVISED DWGS.	YMF	01/04/08	
E	REVISED DWGS.	YMF	03/24/08	
F	REVISED DWGS.	YMF	06/02/08	

TABLE 2.

	QUANTITY	DESCRIPTION		MATERIAL	SIZE
1	1	HEAD SEE SHT 6 ASTM A366		.053" MIN. STL	MAX. 48"
2	1	STRIKE JAMB SEE SHT. 6 ASTM A366		.053" MIN. STL	MAX. 100"
3	1	HINGE JAMB SEE SHT 6 ASTM A366		.053" MIN. STL	MAX. 100"
4	1	LOCK SIDE REINFORCEMENT CHANNEL		.093" MIN. STL	3.5 X 93.44 MAX
5	1	HINGE SIDE PANIC REINFORCEMENT		.067" MIN. STL	MAX. 20"
6	NOTE 3.	HINGE REINFORCEMENT DOOR ASTM A621		.167" MIN. STL.	1.28" X 9.19"
7	NOTE 3.	HINGE REINFORCEMENT FRAME ASTM A621		.167" MIN. STL.	1.3" X 9.187" MAX.
8	NOTE 3.	4.5" X 4.5" BUTT HINGES		.134 MIN.	(8) #12-24 MS PER HINGE
		OPTIONAL CONTINUOUS HINGE		.067" MIN. STL/.12 ALUM	MAX. 95"
9	1	CORE MATERIAL (SHT. 4):	A) HONEYCOMB B) STEEL STIFFENED C/F) POLYSTYRENE D/F) POLYURETHANE/POLYISOCYANURATE E) MINERAL BOARD TEMPERATURE RISE CORE		
10	1	LOCKING HARDWARE - SEE SHEET 2, TABLE 1			
11	1	THRESHOLD SILL W/BUMPER GASKET 1) ZERO INT'L 566 2) NATIONAL GAURD 950 SEE SHT. 5		.100" ALUM. 6063 T5	5.50"X0.5"X48"MAX.
12	NOTE 2.	JAMB ANCHOR ASTM A924		SEE SHEET 4	
13	3	PS074 WEATHER STRIPPING		TPE	MAX. 24'
14	1	FAS-SEAL DOOR SWEEP		TPE	MAX. 47.66"
15	1	END CHANNEL ASTM A924 (14 GA - INVERTED)			.69" X 1.66" X 47.66" MAX.
16	AS NEEDED	BUTYL RUBBER OR 100% SILICONE			
17	1	DOOR SLAB (16 OR 14 GA)		SEE SHEET 6	4' X 8' MAX.
18	1	BY ZERO INT'L	DOOR SEAL No.8144FS	TPE	MAX. 24'
		BY STEELCRAFT	DOOR SEAL PS074		
19	2	BY ZERO INT'L	DOOR SWEEP No.539	TPE	MAX. 96"
		BY NGP	DOOR SWEEP No.202N		
20	1	BY ZERO INT'L	DOOR SWEEP No.139	SEE SHEET 5	MAX. 48"
		BY NGP	OMIT		
21	1	BY ZERO INT'L	ADJUSTABLE STOP No.475	TPE	MAX. 48"
		BY NGP	ADJUSTABLE STOP No.170N		
22	1	BY ZERO INT'L	RAIN DRIP No.11	SEE SHEET 5	MAX. 48"
		BY NGP	DRIP CAP No.16A		
23	1	TOP CAP GALV. A60 ASTM A924		.020" MIN. STL	0.5" X 1.76" X 48" MAX.

SEE NOTE 12

NOTES:

1. ONE ROW OF PS074 WEATHERSTRIPPING PER JAMB AND HEAD. INSTALL PER SHT.5
2. ANCHOR REQUIREMENTS:
   SEE SHEET 4 FOR APPROVED ANCHORS AND INSTALLATION.
3. HINGE REQUIREMENTS: 4.5" STD WT. MIN.
   FOR DOOR OPENING UP TO 90" HIGH - MIN (3) HINGES
   FOR DOOR OPENING OVER 90" - 96" HIGH - MIN (4) HINGES
   STD LOCATIONS: 9.75" FROM RABBET IN HEAD TO CL OF TOP HINGE
   10.38" FROM FLOOR TO CL OF BOTTOM HINGE, EQUALLY SPACED
   IN BETWEEN. HINGE LOCATIONS MAY VARY, MAX SPACING DO NOT EXCEED 35.5"
   APPROVED CONTINUOUS HINGE MODELS: IVES 112 HD, 224HD, 600, 700, MARKAR FM-300, HG-305, STANLEY 661HD, HAGER 780-224HD, 790-900, SELECT SL11HD, ABH A500 & A240HD
4. SEE SHEET 2 & 3 FOR AVAILABLE STANDARD OPENING SIZES AND SPECIFICATIONS.
5. HARDWARE INSTALLATION AS PER MANUFACTURER'S INSTRUCTIONS.
6. 4" FACE HEAD IS AVAILABLE FOR FRAMES.
7. APPLY CAULK AS NEEDED.
8. WEATHERSTRIPPING, SEE SHEET 5.
   -WHEN WATER INFILTRATION IS NOT NEEDED INSTALL WEATHERSTRIPPING PER SHT.5.
   -ONE ROW OF PS074 WEATHERSTRIPPING PER JAMB AND HEAD.
   -WHEN WATER INFILTRATION IS REQUIRED - INSTALL PER SHT.5.
9. SEE SHEET 10 FOR SECTION A-A, SEE SHEET 11 FOR SECTIONS B-B.
10. ELECTRICAL INSTALLATION IS UNDER SEPARATE APPROVAL AND MUST BE REVIEWED BY CORRESPONDING AUTHORITY.
11. OPTIONAL POWER TRANSFERS, MONITORING SWITCHES, SUPPLEMENTAL MAGNETIC LOCKS MAY BE USED AS ALLOWED BY CODE AND IT DOES NOT EFFECT THE MECHANICAL PROPERTIES OF EXIT DEVICE AND/OR INHIBIT EGRESS.
12. ITEMS 18 THROUGH 22 REQUIRED ONLY IF WATER INFILTRATION IS NEEDED.
13. WHEN FOUR-SIDED FRAME IS USED, SILL FRAME SECTION ANCHORED PER TOP DOOR VIEW ON THIS SHEET.

6/10/08
FL 46718

BEND RADIUS		Ingersoll Rand Security Technologies
THIRD ANGLE PROJECTION		TITLE: MIAMI-DADE PRODUCT APPROVAL
DRAWN YMF	DATE 05/20/07	H-SERIES FLUSH SINGLE DOORS (OUTSWING) IR HARDWARE
CHECKED		
APPROVED		SIZE FLAT · DWG NO. IRFS07 · REV F
ENG. APPVL JPD	10/11/07	SCALE: NTS · AUTOCAD · SHEET 3 of 11

REVISIONS				
LTR	DESCRIPTION		DATE	APPROVED
A	APPROVAL DWG	YMF	05/20/07	
C	REVISED DWG	RAP	12/10/07	
D	REVISED DWG	YMF	01/04/08	
F	REVISED DWG	YMF	06/02/08	

PRODUCT REVISED
as complying with the Florida Building Code
Acceptance No. 07-0829.04
Expiration Date MAY 05, 2010
By Ishaq I. Chanda
Miami Dade Product Control Division

A WIRE MASONRY ANCHOR INTO GROUT FILLED FRAME AND BLOCK WALL

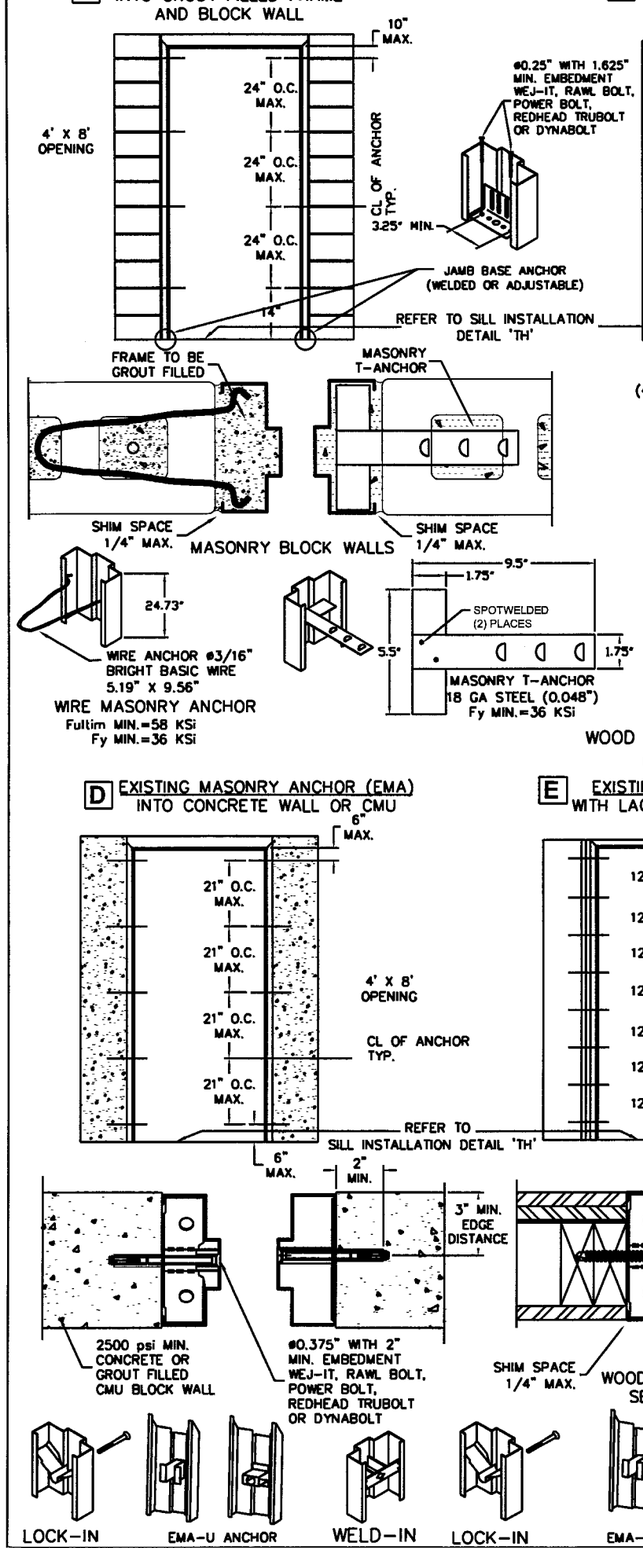

NOTES:
1.(*)WOOD OR (*)STEEL STRUCTURAL MEMBERS OF WOOD AND STEEL-STUD WALLS MUST BE DESIGNED TO CARRY AT LEAST 312 #/FT. LOAD FOR ASSEMBLIES RATED @75 PSF, AND 416#/FT. FOR ASSEMBLIES RATED @100 PSF, WHICH SHOULD BE VERIFIED BY THE APPROPRIATE OFFICIAL.
2.NUMBER OF ANCHORS FOR VARIOUS OPENING HEIGHTS IS LIMITED BY MAXIMUM DISTANCE BETWEEN ANCHORS, SHOWN ON THIS SHEET.
3.CORE MATERIAL SHOWN WITHOUT DOOR CUTOUTS AND REINFORCEMENTS.
4.APPLY CAULK AS NEEDED.
5.FOR SILL INSTALLATION AND ANCHORING SEE SHT 3.
6. WHEN FOUR-SIDED FRAME IS USED FRAME SILL SECTION ANCHORING IS PER SHT.3.

7/17/08
FL 46790

BEND RADIUS
THIRD ANGLE PROJECTION

DRAWN YMF	DATE 05/20/07	Ingersoll Rand Security Technologies
CHECKED		TITLE MIAMI-DADE PRODUCT APPROVAL
APPROVED		FRAME ANCHOR DETAILS & INSTALLATION DOOR CORE OPTIONS.
ENG. APPVL JPD	10/11/07	SIZE FLAT · DWG NO. IRFS07 · REV F
		SCALE: NTS · AUTOCAD · SHEET 4 of 11

TABLE 3.

PERIMETER SEAL HARDWARE WHEN WATER INFILTRATION REQUIREMENT DOES APPLY					
ITEM NUMBER SHT 3. TABLE 2	DESCRIPTION	ALLOWABLE DESIGN PRESSURE, PSF	MODEL No./ MANUFACTURER	PART DETAIL	INSTALLATION DETAIL
11	THRESHOLD	±75	566/ZERO INT'L	'T1'	'P1'
		±50	950/NGP	'T2'	'P2'
14	FAS-SEAL SWEEP	±75	STEELCRAFT	'S'	'P1' & 'P2'
18 OR 13	SELF ADHESIVE DOOR SEAL	±75	8144F/ZERO INT'L	'U'	'M' & 'N'
		±50	PS074/STEELCRAFT	'Q'	
19	DOOR SWEEP	±75	539/ZERO INT'L	'W1'	'N'
		±50	202N/NGP	'W2'	
20	DOOR SWEEP	±75	139/ZERO INT'L	'X'	'P1'
21	ADJUSTABLE STOP	±75	475/ZERO INT'L	'Y1'	'M'
		±50	170N/NGP	'Y2'	
22	RAIN DRIP CAP	±75	11/ZERO INT'L	'Z1'	'P1'
		±50	16A/NGP	'Z2'	'P2'
23	DOOR TOP CAP	±75	STEELCRAFT	'R'	'M'

TABLE 4.

PERIMETER SEAL HARDWARE WHEN WATER INFILTRATION REQUIREMENT DOES NOT APPLY				
ITEM NUMBER SHT 3. TABLE 2	DESCRIPTION	MODEL No. MANUFACTURER	PART DETAIL	INSTALLATION DETAIL
11	THRESHOLD	566 BY ZERO INT'L	'T1'	'K'
		950 BY NATIONAL GUARD	'T2'	
14	FAS-SEAL DOOR SWEEP	STEELCRAFT	'S'	'K'
13	PS-074 SELF ADHESIVE WEATHERSTRIPPING	STEELCRAFT	'Q'	'J' & 'L'
–	–	–	–	–
–	–	–	–	–
–	–	–	–	–
–	–	–	–	–
23	DOOR TOP CAP	STEELCRAFT	'R'	OPTIONAL

REVISIONS

LTR	DESCRIPTION		DATE	APPROVED
A	APPROVAL DWG	YMF	05/20/07	
B	REVISED DWG	RAP	10/11/07	
C	REVISED DWG	RAP	12/10/07	
D	REVISED DWG	YMF	01/07/07	
E	REVISED DWG	YMF	04/03/08	
F	REVISED DWG	YMF	06/03/08	

7/17/08
PR 46718

NOTES:

1. SLOT LOCATIONS MAY VARY WITH DIFFERENT DOOR WIDTH.
2. DOOR SWEEP RIGID SECTION IS MADE OF PRO-FAX #PD-190 POLYPROPYLENE HOMOPOLYMER.
3. DOOR SWEEP FLEXIBLE SECTION IS MADE OF SANTOPRENE #101-73
4. FAS-SEAL DOOR SWEEP (14), AND THRESHOLD (11) ARE REQUIRED FOR ALL INSTALLATIONS.

PART DETAILS

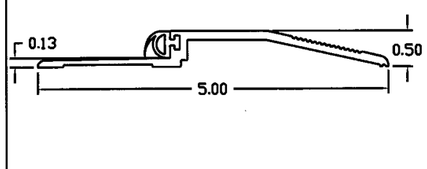

DETAIL 'T1'
ZERO INT'L 566 SERIES THRESHOLD
APPROVED FOR WATER INFILTRATION REQUIREMENT, SINGLE OR DOUBLE DOORS
(11)

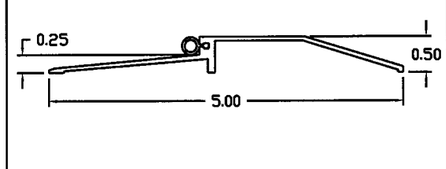

DETAIL 'T2'
NATIONAL GUARD 950 SERIES THRESHOLD
WITH SILICONE, VINYL
OR NEOPRENE BUMPER
(11)

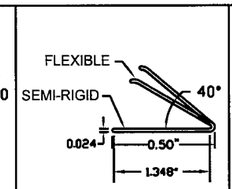

DETAIL 'Q'
PS-074
SELF-ADHESIVE
WEATHERSTRIPPING
(13)

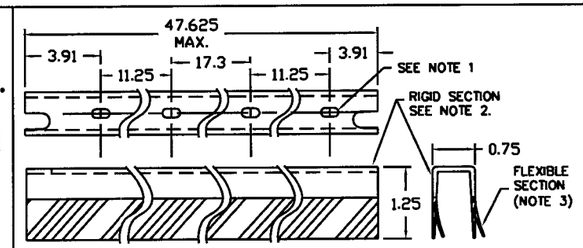

DETAIL 'S'
FAS-SEAL DOOR SWEEP
(14)

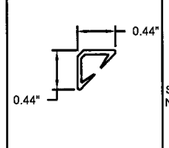

DETAIL 'U'
8144F
DOOR SEAL
(18)

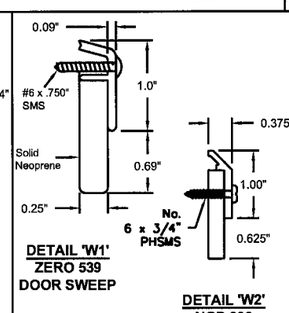

DETAIL 'W1'
ZERO 539
DOOR SWEEP
(19)

DETAIL 'W2'
NGP 202
DOOR SEAL

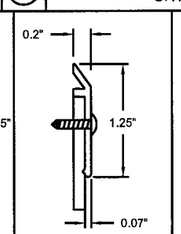

DETAIL 'X'
ZERO 139
DOOR SWEEP
(20)

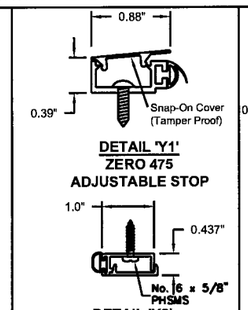

DETAIL 'Y1'
ZERO 475
ADJUSTABLE STOP

DETAIL 'Y2'
NGP 170N
ADJUSTABLE STOP
(21)

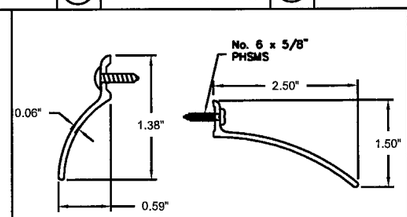

DETAIL 'Z1'
ZERO 11
RAIN DRIP CAP

DETAIL 'Z2'
NGP 16
RAIN DRIP CAP
(22)

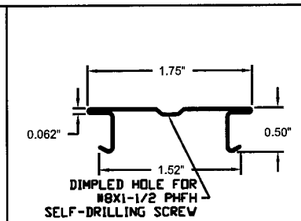

DETAIL 'R'
24 GA TOP CAP
(23)

PRODUCT REVISED
as complying with the Florida
Building Code
Acceptance No 0
Expiration Date
By
Miami Dade Product Control
Division

PERIMETER SEAL INSTALLATION DETAILS WHEN WATER INFILTRATION REQUIREMENTS DO NOT APPLY

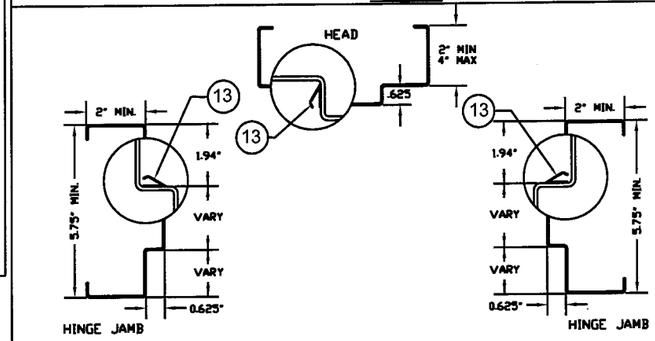

DETAIL 'J'
PERIMETER DOOR SEAL INSTALLATION IN HEAD AND JAMBS

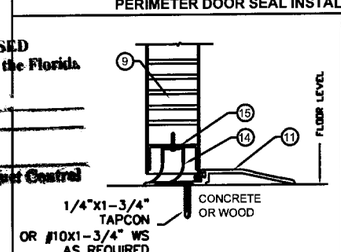

DETAIL 'K'
BOTTOM OF DOOR
WEATHERSTRIPPING AND SILL INSTALLATION

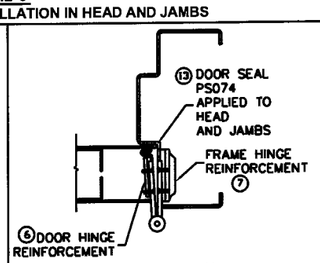

HINGE DETAIL 'L'
HINGE SIDE
WEATHERSTRIPPING INSTALLATION

PERIMETER SEAL INSTALLATION DETAILS WHEN WATER INFILTRATION REQUIREMENTS APPLY

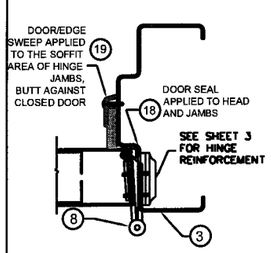

DETAIL 'N1'
HINGE JAMB
SWEEP INSTALLATIION

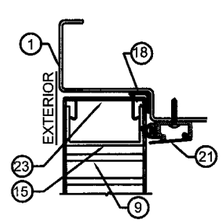

DETAIL 'M'
TOP OF DOOR/HEAD
WEATHERSTRIPPING

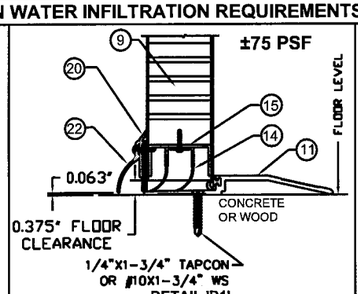

DETAIL 'P1'
BOTTOM OF DOOR
ZERO WEATHERSTRIPPING
AND SILL INSTALLATION

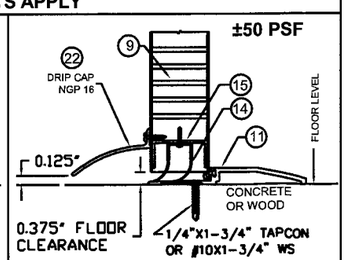

DETAIL 'P2'
BOTTOM OF DOOR
NGP WEATHERSTRIPPING
AND SILL INSTALLATION

BEND RADIUS

THIRD ANGLE PROJECTION

DRAWN YMF	DATE 05/20/07	Ingersoll Rand Security Technologies	
CHECKED		TITLE MIAMI-DADE PRODUCT APPROVAL	
		SINGLE FLUSH DOOR PERIMETER SEAL HARDWARE.	
APPROVED		SIZE FLAT	DWG NO. IRFS07 REV F
ENG. APPVL JPD	10/11/07	SCALE: NTS AUTOCAD	SHEET 5 of 11

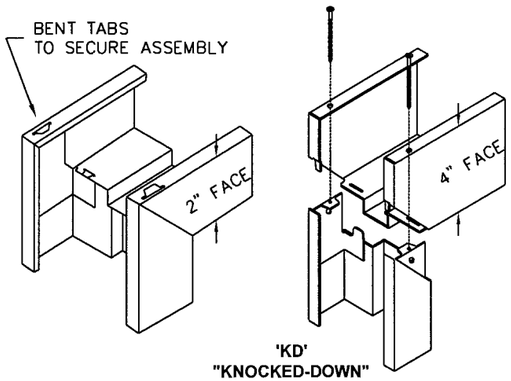

'KD'
"KNOCKED-DOWN"
ASSEMBLY

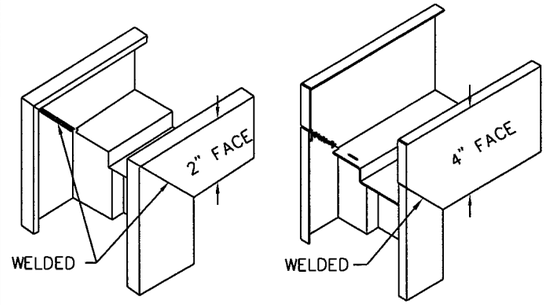

'SUA'
SET-UP AND ARC-WELDED
ASSEMBLY

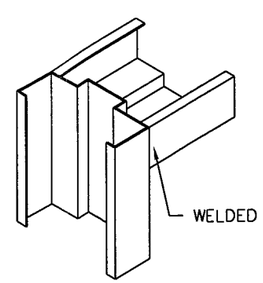

HEAD NOTCHED
AND BUTTED BETWEEN JAMBS

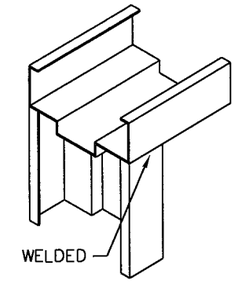

HEAD SITS ON TOP
OF NOTCHED JAMBS

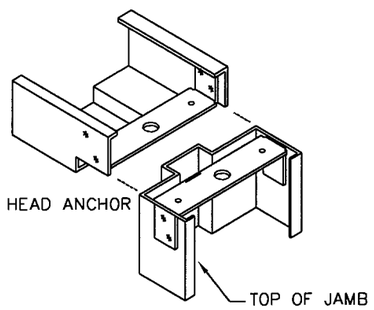

HEAD NOTCHED
AND BOLTED ON TOP OF JAMBS

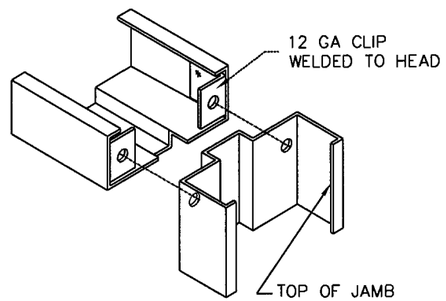

HEAD NOTCHED
AND BOLTED BETWEEN JAMBS

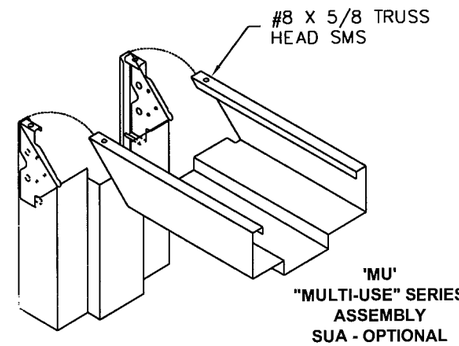

'MU'
"MULTI-USE" SERIES
ASSEMBLY
SUA - OPTIONAL

REVISIONS

LTR	DESCRIPTION		DATE	APPROVED
A	APPROVAL DWG	YMF	05/20/07	
B	REVISED DWG	RAP	10/11/07	
C	REVISED DWG	RAP	12/10/07	
D	REVISED DWG	YMF	01/08/08	
E	REVISED DWG	YMF	04/08/08	
F	REVISED DWG	YMF	06/03/08	

AVAILABLE DOOR CONFIGURATIONS

TABLE 5.

CORE MATERIAL PER SHT.4	MAXIMUM OPENING SIZE WIDTH / HEIGHT	SKIN MATERIAL DESCR.	SKIN MATERIAL GA./MIN. THK
HONEYCOMB POLYSTYRENE POLYURETHANE (POLYISOCYANURATE) TEMPERATURE RISE STEEL STIFFENED	VARIES SEE SHT 2 TABLE 1	CRS GALV	16/.053" 14/.067"
HONEYCOMB POLYSTYRENE POLYURETHANE	VARIES SEE SHT 2 TABLE 1	STAINLESS STEEL	16/.053"

MINIMUM YIELD STRENGTH = 30,100 PSi
MINIMUM TENSILE STRENGTH = 44,700 PSi

AVAILABLE FRAME CONFIGURATIONS

TABLE 6.

FRAME SERIES	JAMB DEPTH	MAXIMUM OPENING SIZE WIDTH / HEIGHT	MATERIAL DESCR.	MATERIAL GA./MIN. THK
F	5.75" MIN.	VARIES SEE SHT 2 TABLE 1	CRS/HRS GALV	16/.053" 14/.067" 12/.099"
			STAINLESS STEEL	16/.053"
MU	5.75" MIN.	VARIES SEE SHT 2 TABLE 1	CRS/HRS GALV	16/.053" 14/.067"

MINIMUM YIELD STRENGTH = 25,500 PSi
MINIMUM TENSILE STRENGTH = 46,000 PSi

NOTES:

1. DOOR CONSTRUCTION
1.1. MINIMUM DOOR THICKNESS – 1 3/4"
1.2. MAXIMUM DOOR SIZE MAY VARY, SUBJECTED TO COMPLIANCE WITH FLORIDA BUILDING CODE AND PRODUCT AVAILABILITY FROM MANUFACTURER (SEE SHEET 2 FOR AVAILABLE HARDWARE)

2. FRAME CONSTRUCTION
1.1. MINIMUM JAMB DEPTH – 5 3/4", STOP HEIGHT – 5/8"
2.2. FRAMES AVAILABLE AS FLUSH (F-SERIES) AND MULT-USE (MU-SERIES) (SEE TABLE 6)

3. FOR MATERIAL SPECIFICATIONS REFERENCE SEE TABLE 7.

TYPICAL FRAME PROFILE
DOUBLE RABBET

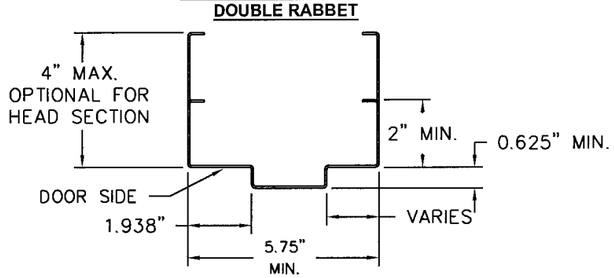

OPTIONAL FRAME PROFILE
SINGLE RABBET

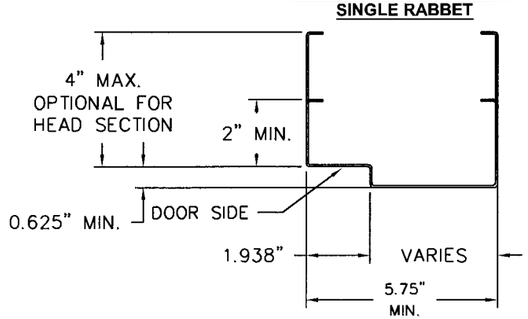

AVAILABLE DOOR PANEL CONFIGURATIONS

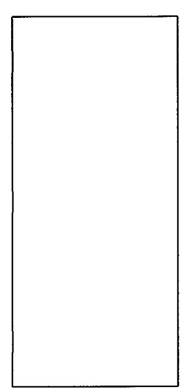

FLUSH

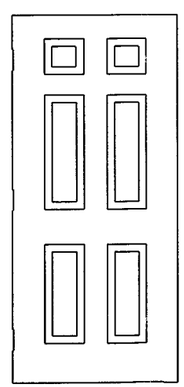

EMBOSSED PANEL

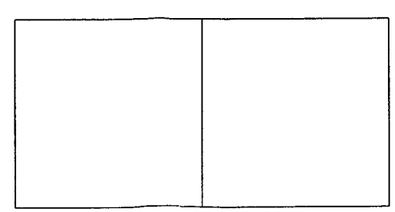

PRODUCT REVISED
as complying with the Florida
Building Code
Acceptance No. 07-0829.04
Expiration Date MAY 05, 2010
By Ishaq I. Chanda
Miami-Dade Product Control
Division

TABLE 7.

CRS ASTM A1008
HRS ASTM A1011
GALV: A60 ASTM A924
STL: 304,306 ASTM A240

6/16/08
FT6718

BEND RADIUS

THIRD ANGLE PROJECTION

DRAWN YMF	DATE 05/20/07
CHECKED	
APPROVED	
ENG. APPVL JPD	10/11/07

Ingersoll Rand
Security Technologies

TITLE MIAMI-DADE PRODUCT APPROVAL

FRAME PROFILE, CORNER DETAILS AND DOOR FRAME MATERIAL, AND SIZE OPTIONS

SIZE	FLAT	DWG NO.	REV
		IRFS07	F

SCALE: NTS | AUTOCAD | SHEET 6 of 11

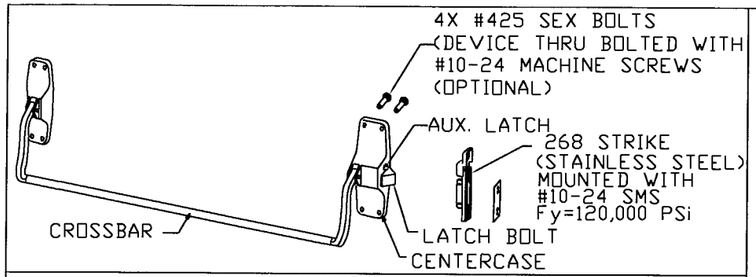

RIM EXIT DEVICE VON DUPRIN 88-F
USED IN **DOOR CONFIGURATION 8** (SEE SHT.1)

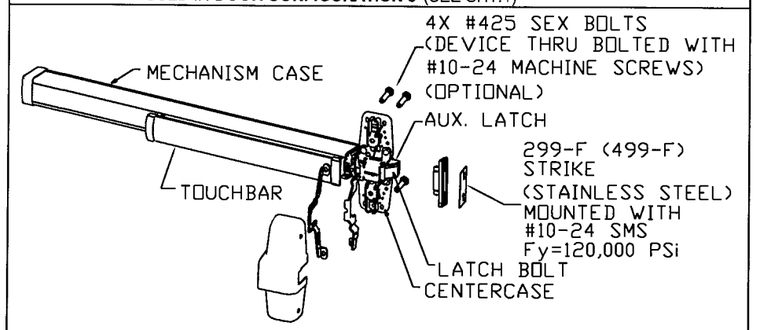

RIM EXIT DEVICE VON DUPRIN 98/99(F)
USED IN **DOOR CONFIGURATION 8** (SEE SHT.1)

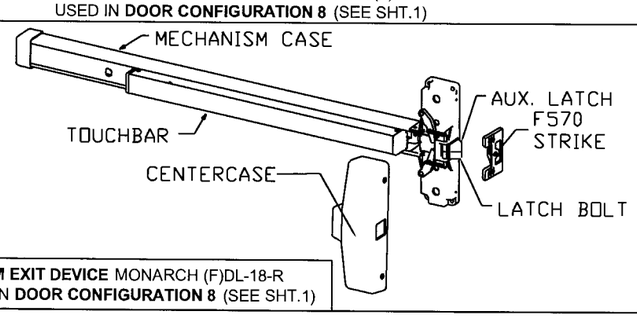

RIM EXIT DEVICE MONARCH (F)DL-18-R
USED IN **DOOR CONFIGURATION 8** (SEE SHT.1)

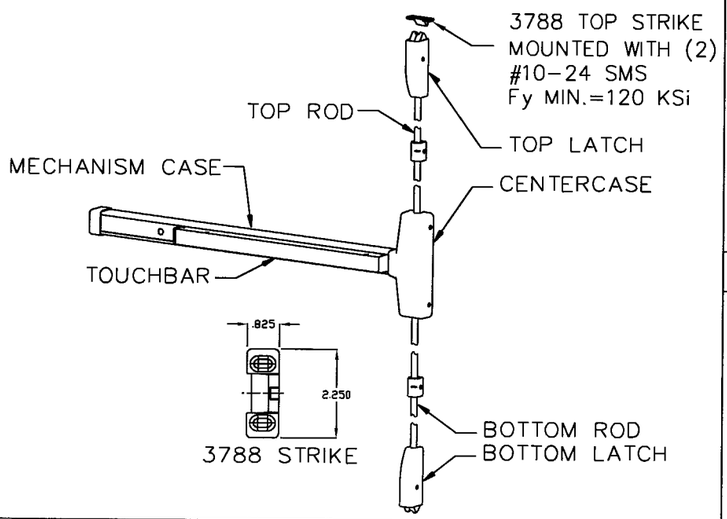

SURFACE VERTICAL ROD EXIT DEVICE
MONARCH (F)18-V
USED IN **DOOR CONFIGURATION 5** (SEE SHT.1)

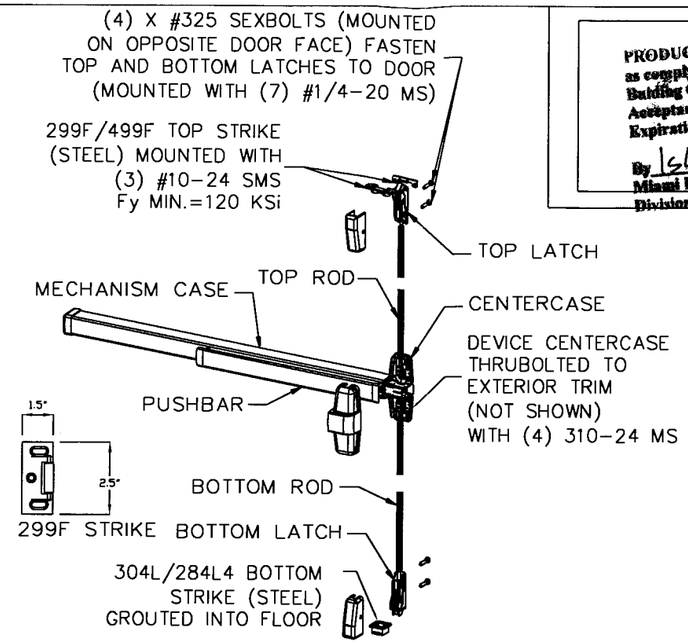

SURFACE VERTICAL ROD EXIT DEVICE VON DUPRIN 98/9927(F)
USED IN **DOOR CONFIGURATION 5** (SEE SHT.1)

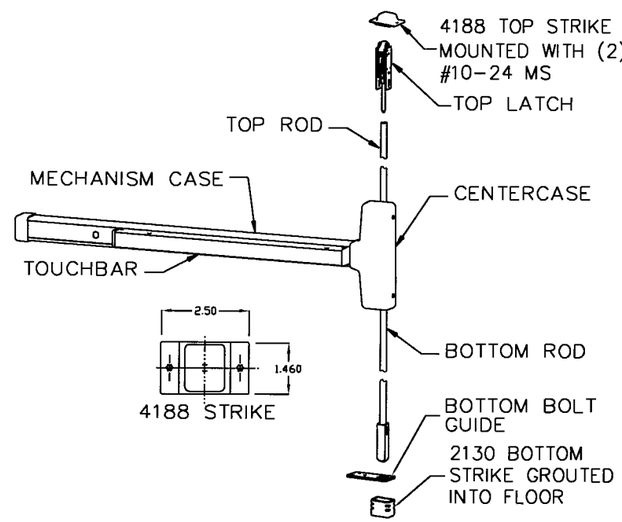

CONCEALED VERTICAL ROD EXIT DEVICE MONARCH F-18-C
USED IN **DOOR CONFIGURATION 6** (SEE SHT.1)

PRODUCT REVISED
as complying with the Florida
Building Code
Acceptance No. 07-0829.04
Expiration Date MAY 04, 2010
By Ishaq Chand
Miami Dade Product Control
Division

REVISIONS				
LTR	DESCRIPTION		DATE	APPROVED
A	APPROVAL DWG	YMF	05/20/07	
B	REVISED DWG	RAP	10/11/07	
C	REVISED DWG	RAP	12/10/07	
D	REVISED DWG	YMF	01/08/08	
F	REVISED DWG	YMF	06/03/08	

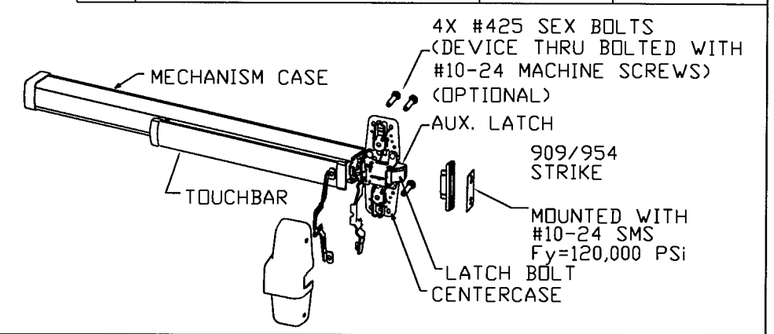

RIM EXIT DEVICE VON DUPRIN XP98/99(F)
USED IN **DOOR CONFIGURATION 9** (SEE SHT.1)

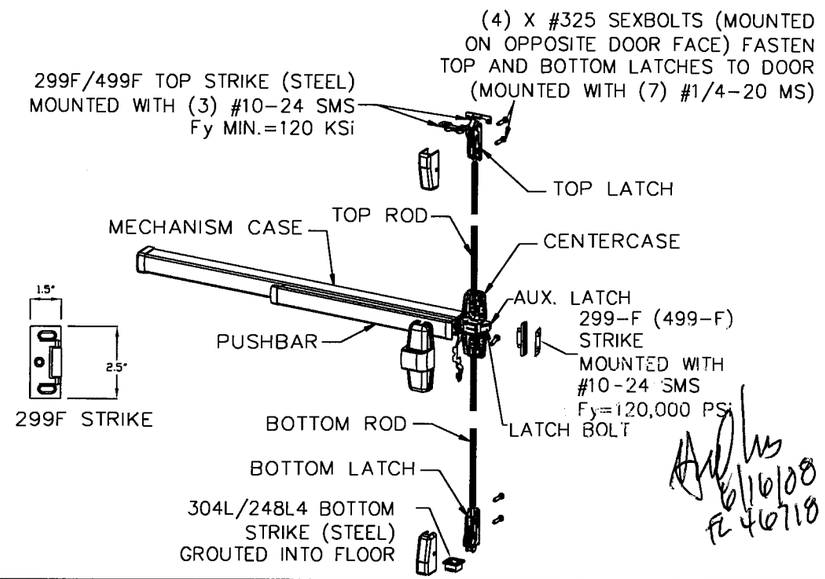

6/16/08
FL 40718

THREE-POINT EXIT DEVICE VON DUPRIN 98/9957(F)
USED IN **DOOR CONFIGURATION 7** (SEE SHT.1)

EXIT HARDWARE OPTIONS:
FOR 98/99 & XP98/99 SERIES - FUNCTIONS E, RX, LX, SS, EL, CX, F
TRIMS: ALL APPLICABLE TRIMS AVAILABLE.
FOR 88-F SERIES - FUNCTION E
TRIMS: ALL APPLICABLE TRIMS AVAILABLE.
PN MODEL OFFERED.
FOR 2670 GUARD-X
TRIMS: ALL APPLICABLE TRIMS AVAILABLE.
FOR 18-R, 18-C & 18-V SERIES - FUNCTIONS DL,EA, HWEA,DE,ELR,F,DM,LM,AE,LK,SM
TRIMS: ALL APPLICABLE TRIMS AVAILABLE

NOTE: ELECTRIC/ELECTRONIC FUNCTION IS NOT PART OF THIS APPROVAL AND MUST BE REVIEWED BY AUTHORITY HAVING JURISDICTION

BEND RADIUS

THIRD ANGLE PROJECTION

DRAWN YMF	DATE 05/20/07
CHECKED	CDATE
APPROVED	ADATE
ENG. APPVL JPD	EDATE 10/11/07

Ingersoll Rand
Security Technologies

TITLE MIAMI-DADE PRODUCT APPROVAL

IR EXIT HARDWARE OPTIONS FOR FLUSH SINGLE DOORS

SIZE	FLAT	DWG NO. IRFS07	REV F
SCALE: NTS	AUTOCAD		SHEET 7 of 11

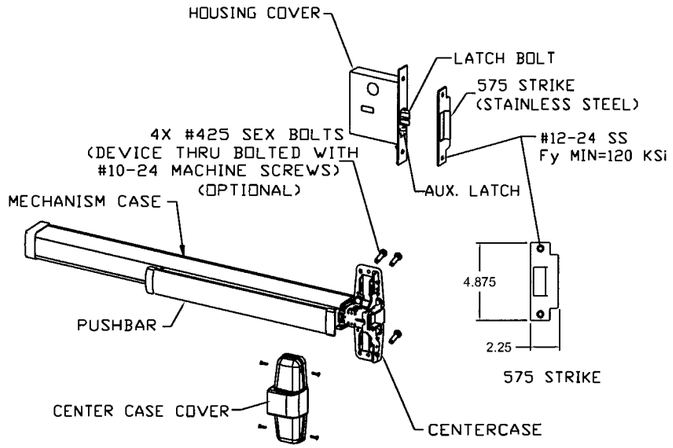

MORTISE EXIT DEVICE VON DUPRIN 98/9975(F)
USED IN **DOOR CONFIGURATION 10** (SEE SHT.1)

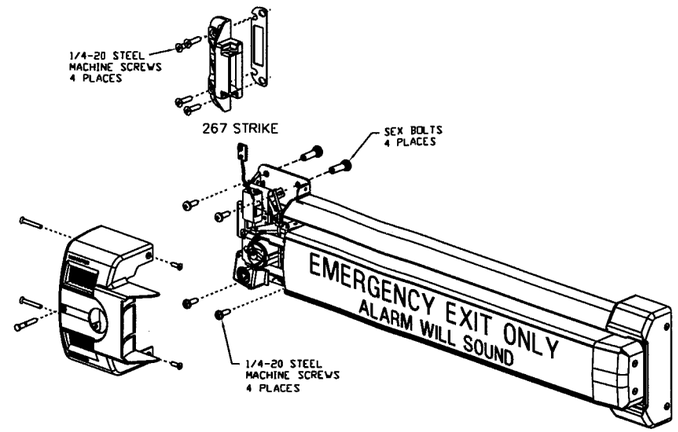

EXIT ALARM LOCK VON DUPRIN 2670 GUARD-X
USED IN **DOOR CONFIGURATION 11** (SEE SHT.1)

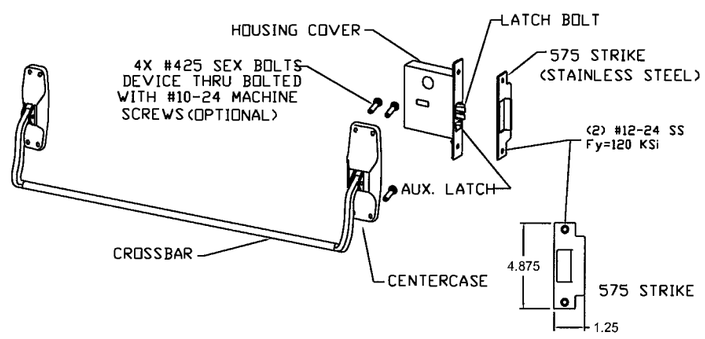

MORTISE EXIT DEVICE VON DUPRIN 8875(F)
USED IN **DOOR CONFIGURATION 10** (SEE SHT.1)

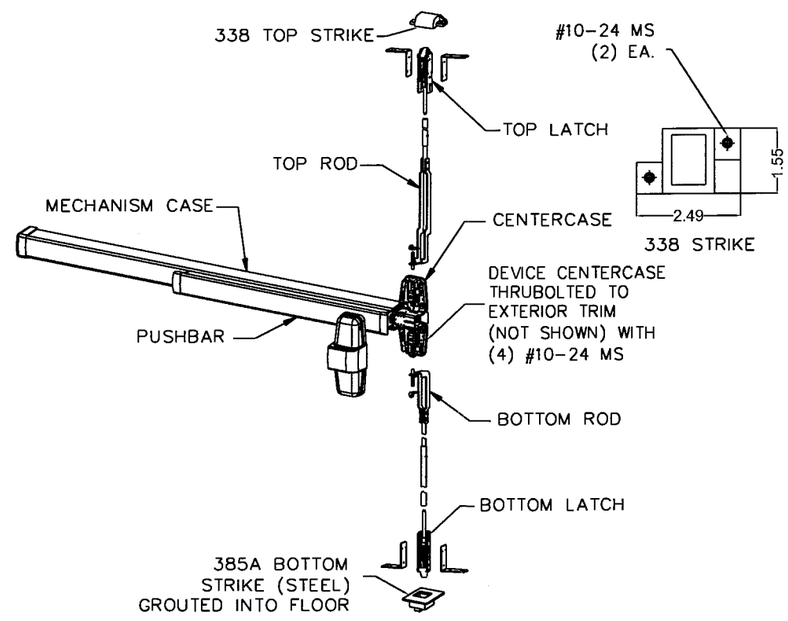

CONCEALED VERTICAL ROD EXIT DEVICE VON DUPRIN 98/9947-F
USED IN **DOOR CONFIGURATION 6** (SEE SHT.1)

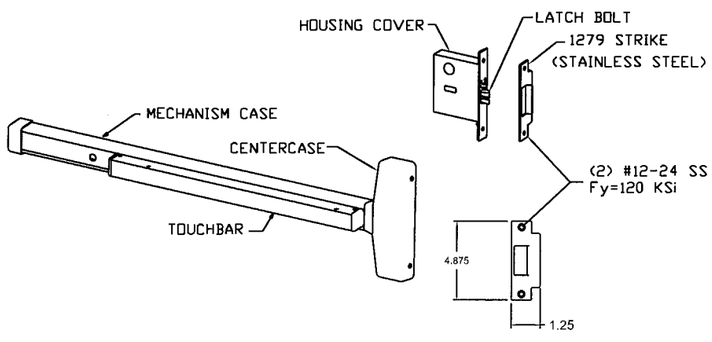

MORTISE EXIT DEVICE MONARCH (F)18-M
USED IN **DOOR CONFIGURATION 10** (SEE SHT.1)

REVISIONS				
LTR	DESCRIPTION		DATE	APPROVED
A	APPROVAL DWG	YMF	05/20/07	
B	REVISED DWG	RAP	10/11/07	
C	REVISED DWG	RAP	12/10/07	
D	REVISED DWG	YMF	12/10/07	
E	REVISED DWG	YMF	04/08/08	
F	REVISED DWG	YMF	06/03/08	

6/16/08
FL 46718

EXIT HARDWARE OPTIONS:
FOR 98/99 & XP98/99 SERIES - FUNCTIONS E, RX, LX, SS, EL, CX, F
TRIMS: ALL APPLICABLE TRIMS AVAILABLE.
FOR 88-F SERIES - FUNCTION E
TRIMS: ALL APPLICABLE TRIMS AVAILABLE.
PN MODEL OFFERED.
FOR 2670 GUARD-X
TRIMS: ALL APPLICABLE TRIMS AVAILABLE.
FOR 18-R, 18-C & 18-V SERIES - FUNCTIONS DL,EA, HWEA,DE,ELR,F,DM,LM,AE,LK,SM
TRIMS: ALL APPLICABLE TRIMS AVAILABLE.

NOTE: ELECTRIC/ELECTRONIC FUNCTION IS NOT PART OF THIS APPROVAL AND MUST BE REVIEWED BY AUTHORITY HAVING JURISDICTION

PRODUCT REVISED
as complying with the Florida
Building Code
Acceptance No 07-0829.04
Expiration Date MAY 05, 2010
By Ishaq I. Chanda
Miami Dade Product Control
Division

BEND RADIUS

THIRD ANGLE PROJECTION

DRAWN YMF	DATE 05/20/07
CHECKED	
APPROVED	
ENG. APPVL JPD	10/11/07

Ingersoll Rand
Security Technologies

TITLE MIAMI-DADE PRODUCT APPROVAL
IR EXIT HARDWARE OPTIONS FOR FLUSH SINGLE DOORS.

SIZE	FLAT	DWG NO.	IRFS07	REV F
SCALE: NTS	AUTOCAD			SHEET 8 of 11

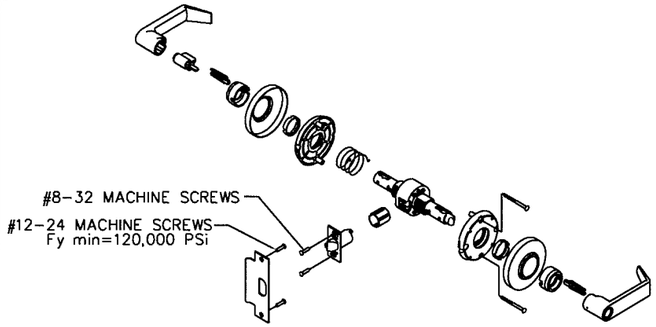

CYLINDRICAL LOCKSET WITH 1/2" THROW LATCH SCHLAGE AL-SERIES
USED IN **DOOR CONFIGURATION 2** (SEE SHT.1)

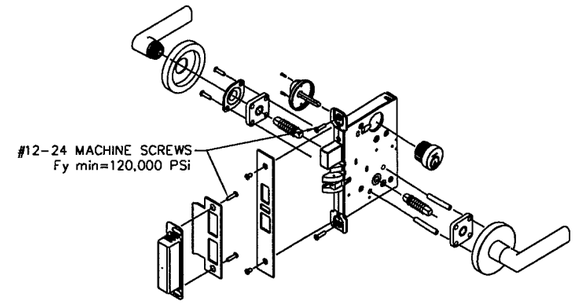

MORTISE LOCKSET WITH DEADBOLT FUNCTION SCHLAGE L/LV 9400 SERIES
USED IN **DOOR CONFIGURATION 1** (SEE SHT.1)

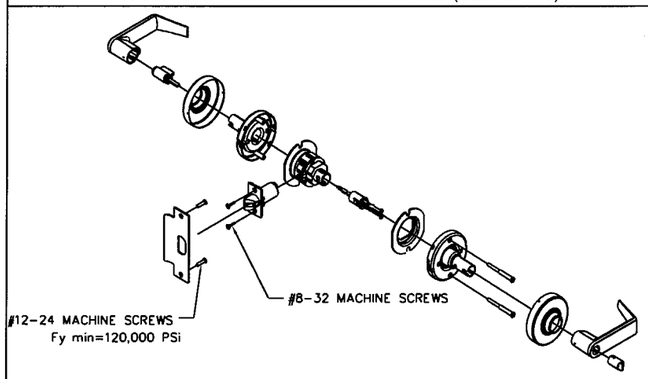

CYLINDRICAL LOCKSET SCHLAGE D/ND-SERIES
USED IN **DOOR CONFIGURATIONS 3 & 4** (SEE SHT.1)

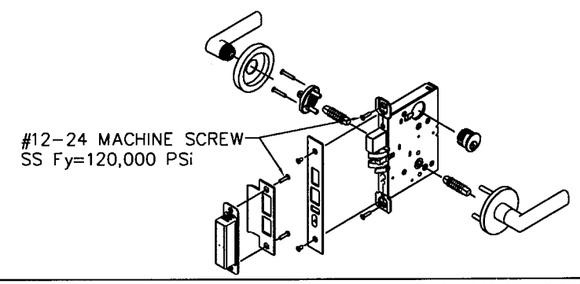

MORTISE LOCKSET WITH DEADBOLT FUNCTION FALCON M-SERIES
USED IN **DOOR CONFIGURATION 1** (SEE SHT.1)

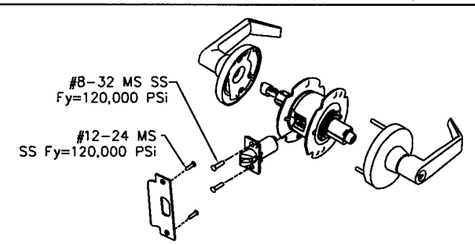

CYLINDRICAL LOCKSET FALCON T-SERIES
USED IN **DOOR CONFIGURATIONS 4** (SEE SHT.1)

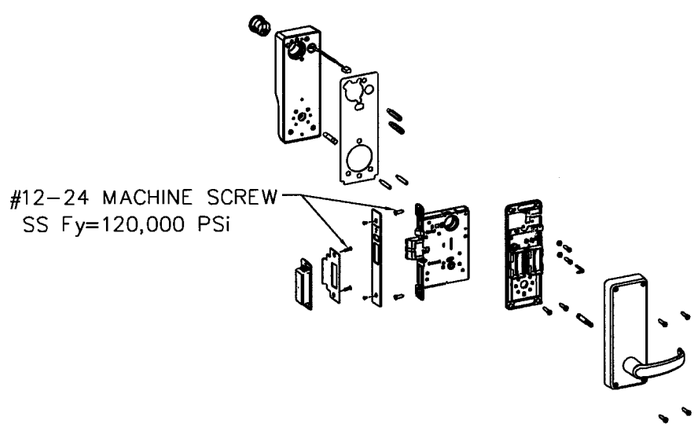

MORTISE LOCKSET WITH AUTOBOLT LOCKNETICS / SCHLAGE 5500 SERIES
USED IN **DOOR CONFIGURATION 1** (SEE SHT.1)

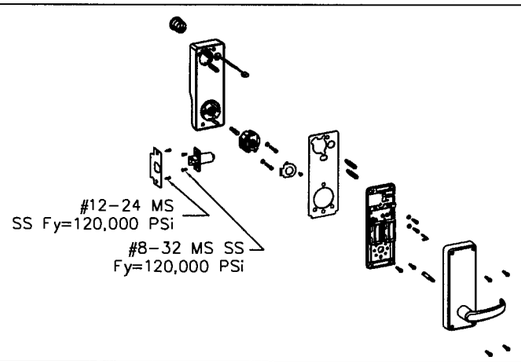

CYLINDRICAL LOCKSET LOCKNETICS / SCHLAGE 5100 SERIES
USED IN **DOOR CONFIGURATION 4** (SEE SHT.1)

REVISIONS

LTR	DESCRIPTION			DATE	APPROVED
A	APPROVAL	DWG	YMF	05/20/07	
B	REVISED	DWG	RAP	10/11/07	
C	REVISED	DWG	RAP	12/10/07	
D	REVISED	DWG	YMF	01/08/08	
E	REVISED	DWG	YMF	04/08/08	
F	REVISED	DWG	YMF	06/03/08	

10/16/08
FL 46718

PRODUCT REVISED
as complying with the Florida
Building Code
Acceptance No. 07-0529.04
Expiration Date MAY 05, 2010
By Ishaq I. Llanda
Miami Dade Product Control
Division

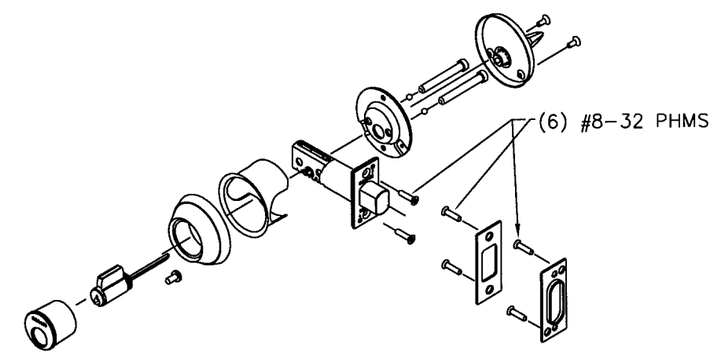

CYLINDRICAL DEADLOCK FALCON D400/800-SERIES & SCHLAGE B600/700/800
USED IN **DOOR CONFIGURATION 12** (SEE SHT.1)

BEND RADIUS

THIRD ANGLE PROJECTION

Ingersoll Rand
Security Technologies

TITLE MIAMI-DADE PRODUCT APPROVAL

IR HARDWARE OPTIONS FOR FLUSH SINGLE DOORS.

DRAWN YMF	DATE 05/20/07		
CHECKED			
APPROVED		SIZE FLAT	DWG NO. IRFS07	REV F
ENG. APPVL JPD	10/11/07	SCALE: NTS	AUTOCAD	SHEET 9 of 11

REVISIONS				
LTR	DESCRIPTION		DATE	APPROVED
A	APPROVAL DWG	YMF	05/20/07	
B	REVISED DWG	RAP	10/11/07	
C	REVISED DWG	RAP	12/10/07	
D	REVISED DWG	YMF	12/10/07	
E	REVISED DWG	YMF	04/08/08	
F	REVISED DWG	YMF	06/03/08	

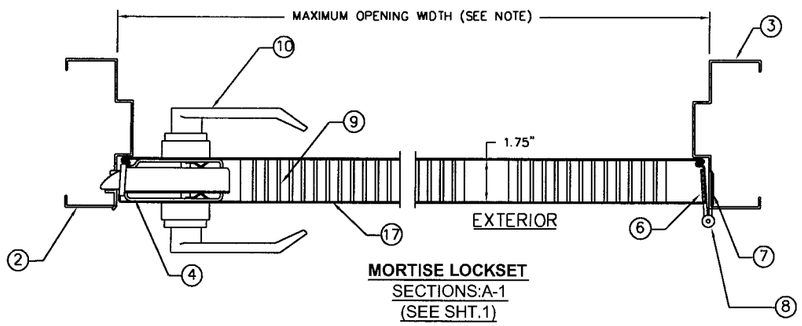

MORTISE LOCKSET
SECTIONS:A-1
(SEE SHT.1)

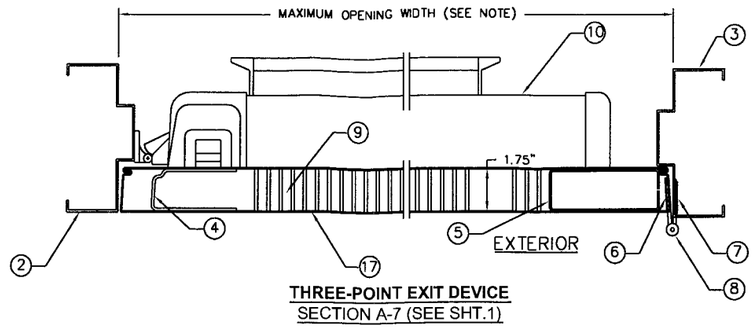

THREE-POINT EXIT DEVICE
SECTION A-7 (SEE SHT.1)

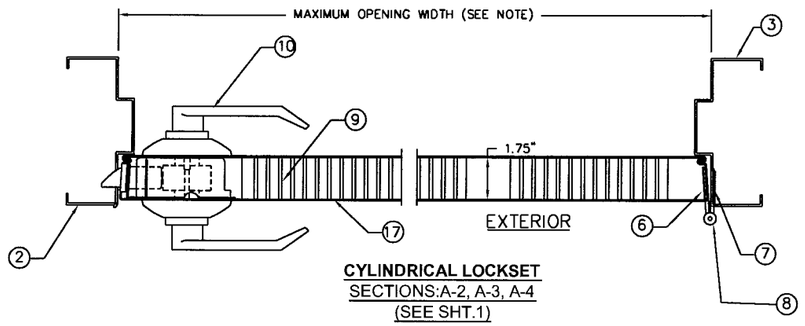

CYLINDRICAL LOCKSET
SECTIONS:A-2, A-3, A-4
(SEE SHT.1)

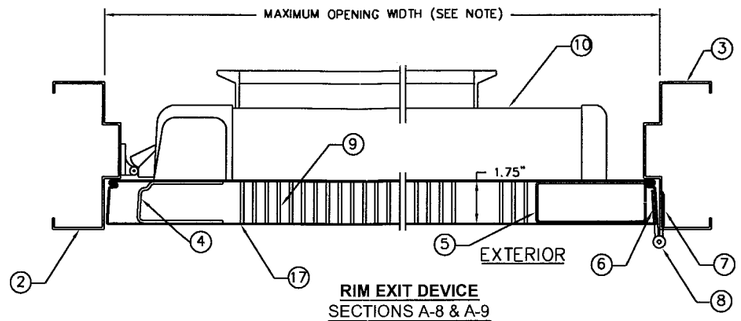

RIM EXIT DEVICE
SECTIONS A-8 & A-9
(SEE SHT.1)

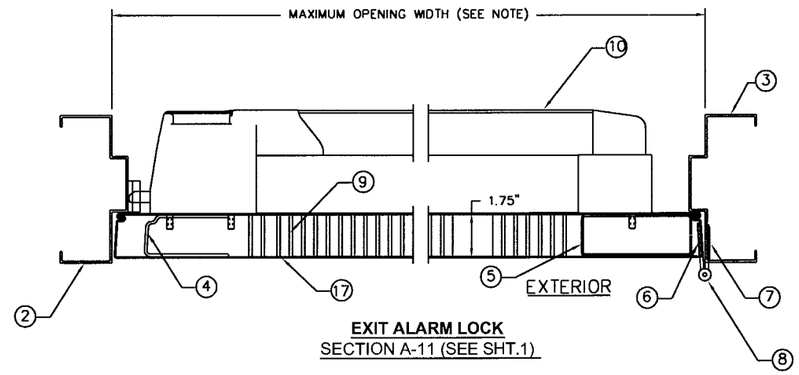

EXIT ALARM LOCK
SECTION A-11 (SEE SHT.1)

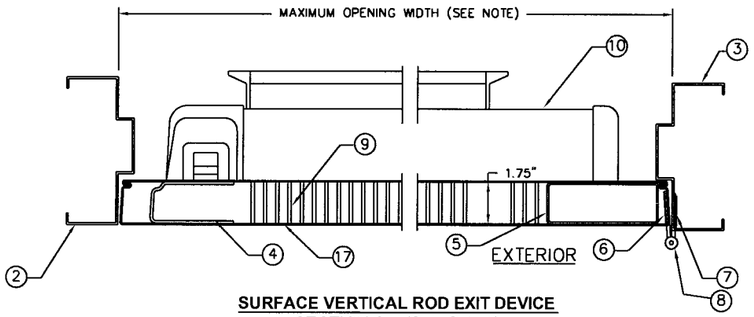

SURFACE VERTICAL ROD EXIT DEVICE
SECTION A-5 (SEE SHT.1)

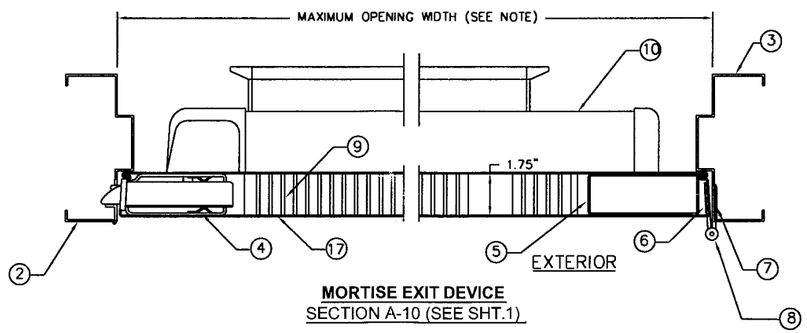

MORTISE EXIT DEVICE
SECTION A-10 (SEE SHT.1)

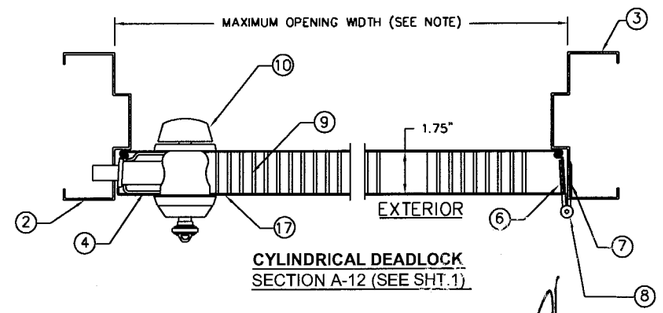

CYLINDRICAL DEADLOCK
SECTION A-12 (SEE SHT.1)

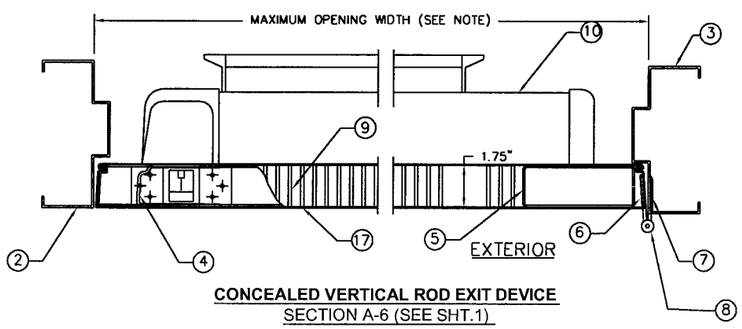

CONCEALED VERTICAL ROD EXIT DEVICE
SECTION A-6 (SEE SHT.1)

NOTE:

FOR MAXIMUM OPENING SIZE SEE TABLE 1 ON SHEET 2 OF 11.

6/16/08
FL 46718

PRODUCT REVISED
as complying with the Florida
Building Code
Acceptance No. 07-0829.04
Expiration Date MAY 05, 2010
By Ishaq I. Llanda
Miami Dade Product Control
Division

BEND RADIUS

THIRD ANGLE PROJECTION

DRAWN YMF	DATE 05/20/007
CHECKED	
APPROVED	
ENG. APPVL JPD	10/11/07

Ingersoll Rand
Security Technologies

TITLE MIAMI-DADE PRODUCT APPROVAL

HORIZONTAL CROSS SECTIONS FOR FLUSH SINGLE DOORS.

SIZE	FLAT	DWG NO.	REV
		IRFS07	F

SCALE: NTS | AUTOCAD | SHEET 10 of 11

REVISIONS				
LTR	DESCRIPTION		DATE	APPROVED
A	APPROVAL DWG	YMF	05/20/07	
B	REVISED DWG	RAP	10/11/07	
C	REVISED DWG	RAP	12/10/07	
D	REVISED DWG	YMF	01/08/08	
E	REVISED DWG	YMF	04/08/08	
F	REVISED DWG	YMF	06/03/08	

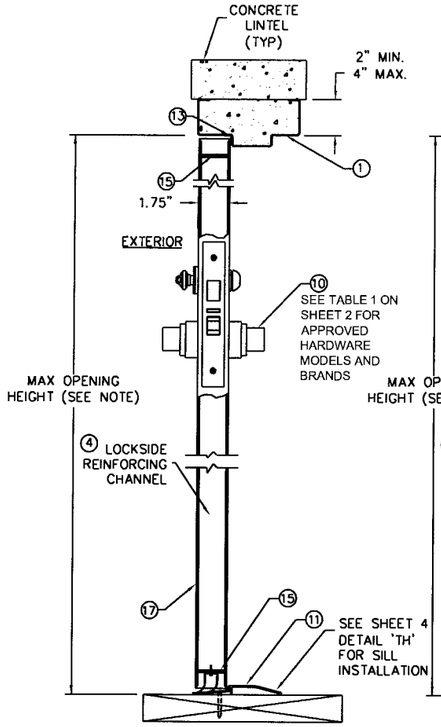

MORTISE LOCKSET
SECTION: B-1
(SEE SHT.1)

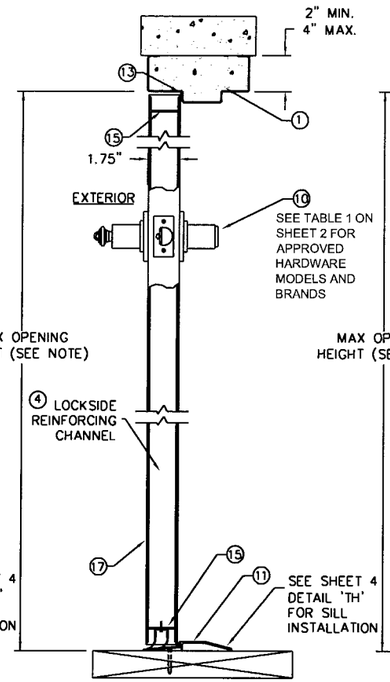

CYLINDRICAL LOCKSET
SECTIONS:B-1, B-2 & B-3
(SEE SHT.1)

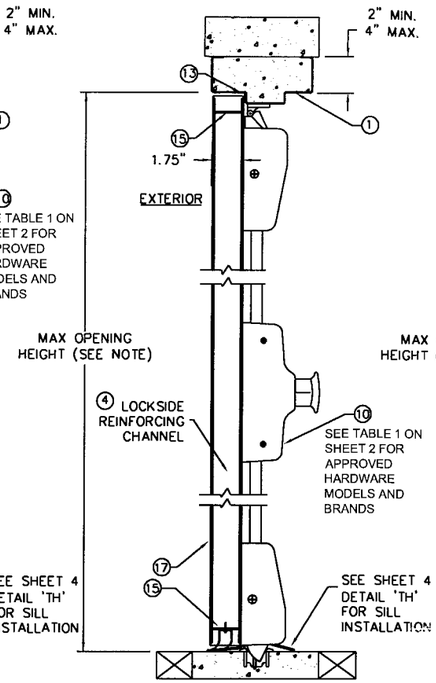

SURFACE VERTICAL ROD EXIT DEVICE
SECTION B-5 (SEE SHT.1)

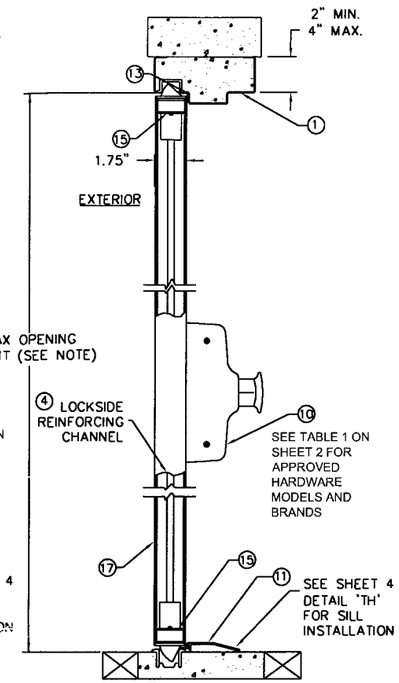

CONCEALED VERTICAL ROD EXIT DEVICE
SECTION B-6 (SEE SHT.1)

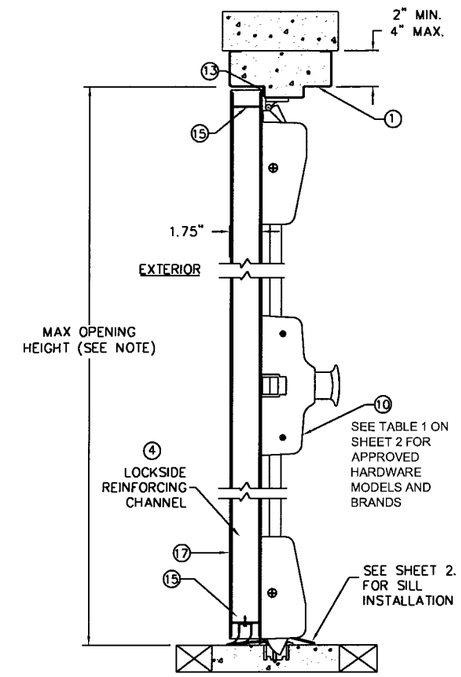

THREE-POINT EXIT DEVICE
SECTION B-7 (SEE SHT.1)

PRODUCT REVISED
as complying with the Florida Building Code
Acceptance No. 07-0829.04
Expiration Date MAY 05, 2010
By Ishaq I. Chanda
Miami Dade Product Control Division

26/16/08
FL 46718

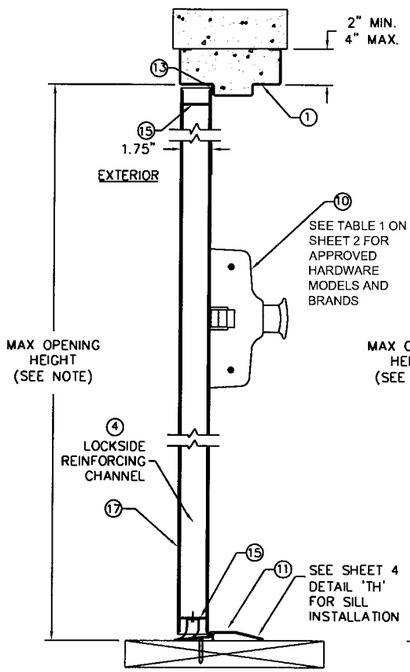

RIM EXIT DEVICE
SECTIONS B-8 & B-9
(SEE SHT.1)

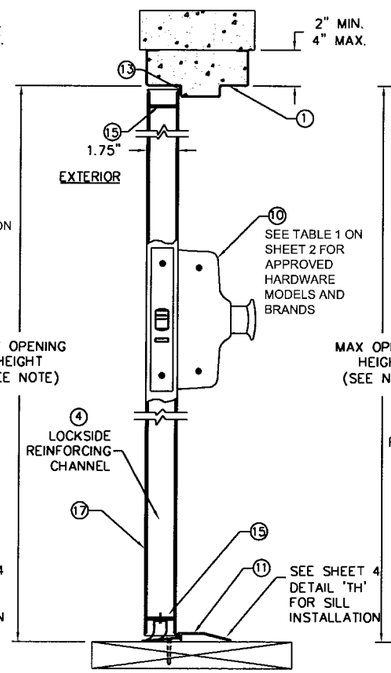

MORTISE EXIT DEVICE
SECTION B-10 (SEE SHT.1)

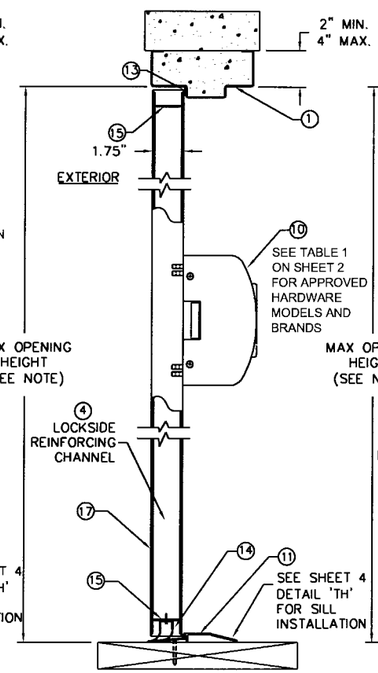

EXIT ALARM LOCK
SECTION B-11 (SEE SHT.1)

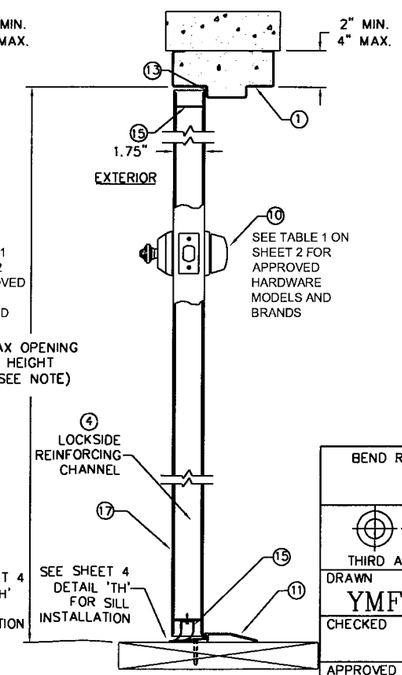

CYLINDRICAL DEADLOCK
SECTION B-12 (SEE SHT.1)

NOTES:
1. FOR MAXIMUM OPENING SIZE SEE TABLE 1 ON SHEET 2 OF 11.

BEND RADIUS	Ingersoll Rand Security Technologies		
THIRD ANGLE PROJECTION	TITLE MIAMI-DADE PRODUCT APPROVAL		
DRAWN YMF	DATE 05/20/07	VERTICAL CROSS SECTIONS FOR FLUSH SINGLE DOORS.	
CHECKED			
APPROVED		SIZE FLAT	DWG NO. IRFS07	REV F
ENG. APPVL JPD	10/11/07	SCALE: NTS	AUTOCAD	SHEET 11 of 11