MIAMI-DADE COUNTY

BUILDING CODE COMPLIANCE OFFICE (BCCO)
PRODUCT CONTROL DIVISION

MIAMI-DADE COUNTY, FLORIDA
METRO-DADE FLAGLER BUILDING
140 WEST FLAGLER STREET, SUITE 1603
MIAMI, FLORIDA 33130-1563
(305) 375-2901 FAX (305) 372-6339
www.miamidade.gov/buildingcode

NOTICE OF ACCEPTANCE (NOA)

PGT Industries
1070 Technology Drive
Nokomis, FL 34275

SCOPE:

This NOA is being issued under the applicable rules and regulations governing the use of construction materials. The documentation submitted has been reviewed by Miami-Dade County Product Control Division and accepted by the Board of Rules and Appeals (BORA) to be used in Miami Dade County and other areas where allowed by the Authority Having Jurisdiction (AHJ).

This NOA shall not be valid after the expiration date stated below. The Miami-Dade County Product Control Division (In Miami Dade County) and/or the AHJ (in areas other than Miami Dade County) reserve the right to have this product or material tested for quality assurance purposes. If this product or material fails to perform in the accepted manner, the manufacturer will incur the expense of such testing and the AHJ may immediately revoke, modify, or suspend the use of such product or material within their jurisdiction. BORA reserves the right to revoke this acceptance, if it is determined by Miami-Dade County Product Control Division that this product or material fails to meet the requirements of the applicable building code.

This product is approved as described herein, and has been designed to comply with the Florida Building Code, including the High Velocity Hurricane Zone.

DESCRIPTION: Series "HR-810 Multi – Story" Aluminum Horizontal Roller Window – N.I.

APPROVAL DOCUMENT: Drawing No. **4126-1**, titled "Alum. Horizontal Roller Window, Non-Impact", sheets 1 through 6 of 6, dated 8/15/2002 with revision B dated 9/28/2006, prepared by manufacturer, signed and sealed and dated 10/10/2006 by Robert L. Clark, P.E., bearing the Miami-Dade County Product Control Revision stamp with the Notice of Acceptance number and expiration date by the Miami-Dade County Product Control Division.

MISSILE IMPACT RATING: None

LABELING: Each unit shall bear a permanent label with the manufacturer's name or logo, city, state and following statement: "Miami-Dade County Product Control Approved", unless otherwise noted herein.

RENEWAL of this NOA shall be considered after a renewal application has been filed and there has been no change in the applicable building code negatively affecting the performance of this product.

TERMINATION of this NOA will occur after the expiration date or if there has been a revision or change in the materials, use, and/or manufacture of the product or process. Misuse of this NOA as an endorsement of any product, for sales, advertising or any other purposes shall automatically terminate this NOA. Failure to comply with any section of this NOA shall be cause for termination and removal of NOA.

ADVERTISEMENT: The NOA number preceded by the words Miami-Dade County, Florida, and followed by the expiration date may be displayed in advertising literature. If any portion of the NOA is displayed, then it shall be done in its entirety.

INSPECTION: A copy of this entire NOA shall be provided to the user by the manufacturer or its distributors and shall be available for inspection at the job site at the request of the Building Official.

This NOA **renews NOA # 06-0717.05** and consists of this page 1 and evidence pages E-1, E-2 and E-3, as well as approval document mentioned above.

The submitted documentation was reviewed by **Jaime D. Gascon, P.E.**

PRODUCT CONTROL ACCEPTED

J. Gascon
11/9/07

PGT Industries

NOTICE OF ACCEPTANCE: EVIDENCE SUBMITTED

A. DRAWINGS

1. Manufacturer's die drawings and sections.

2. Drawing No. 4126-1, titled "Alum. Horizontal Roller Window, Non-Impact", sheets 1 through 6 of 6, dated 8/15/2002 with revision B dated 9/28/2006, prepared by manufacturer, signed and sealed and dated 10/10/2006 by Robert L. Clark, P.E.
(Submitted under NOA # 06-0717.05)

B. TESTS.

1. Test reports on 1) Air Infiltration Test, per FBC, TAS 202-94
2) Uniform Static Air Pressure Test, Loading per FBC TAS 202-94
3) Water Resistance Test, per FBC, TAS 202-94
4) Forced Entry Test, per FBC 2411 3.2.1, TAS 202-94
along with marked-up drawings and installation diagram of a series HR-810 aluminum horizontal sliding window, glazed with 1/4" temp. glass, prepared by Fenestration Testing Laboratory, Inc., Test Report No. **FTL-4854**, dated 03/06/06, signed and sealed by Edmundo Largaespada, P.E.
(Submitted under NOA # 06-0717.05)

2. Test reports on 1) Air Infiltration Test, per SFBC, PA 202-94
2) Uniform Static Air Pressure Test, Loading per SFBC PA 202-94
3) Water Resistance Test, per SFBC, PA 202-94
4) Forced Entry Test, per SFBC 3603.2 (b) and PA 202-94
along with marked-up drawings and installation diagram of one specimen of a series HR-810 aluminum horizontal sliding window w/ 3/16" temp. glass, prepared by Fenestration Testing Laboratory, Inc., Test Report No. **FTL-3475**, dated June 27, 2002, signed and sealed by James G. Worth, P.E.
(Submitted under NOA # 06-0717.05)

3. Test reports on 1) Air Infiltration Test, per SFBC, PA 202-94
2) Uniform Static Air Pressure Test, Loading per SFBC PA 202-94
3) Water Resistance Test, per SFBC, PA 202-94
4) Forced Entry Test, per SFBC 3603.2 (b) and PA 202-94
along with marked-up drawings and installation diagram of one specimen of a series HR-810 aluminum horizontal sliding window w/ ¼" temp. glass, prepared by Fenestration Testing Laboratory, Inc., Test Report No. **FTL-3481**, dated June 27, 2002, signed and sealed by James G. Worth, P.E.
(Submitted under NOA # 06-0717.05)

Jaime D. Gascon, P.E.
Chief, Product Control Division
NOA No. 07-0829.09
Expiration Date: January 02, 2013
Approval Date: November 22, 2007

NOTICE OF ACCEPTANCE: EVIDENCE SUBMITTED

B. TESTS (Continuous)

4. Test reports on 1) Air Infiltration Test, per SFBC, PA 202-94
2) Uniform Static Air Pressure Test, Loading per SFBC PA 202-94
3) Water Resistance Test, per SFBC, PA 202-94
4) Forced Entry Test, per SFBC 3603.2 (b) and PA 202-94
along with marked-up drawings and installation diagram of one specimen of a series HR-810 aluminum horizontal sliding window w/ 0.460" ann. laminated glass, prepared by Fenestration Testing Laboratory, Inc., Test Report No. **FTL-3373**, dated February 28, 2002, signed and sealed by Luis A. Figueredo, P.E.
(Submitted under NOA # 06-0717.05)

C. CALCULATIONS

1. Anchor Calculations and structural analysis, complying with FBC-2004, prepared by manufacturer, dated 03/27/06 and revised on 10/10/06, signed and sealed by Robert L. Clark, P.E.
Complies with ASTM E1300-98/ 02
(Submitted under NOA # 06-0717.05)

D. QUALITY ASSURANCE

1. Miami Dade Building Code Compliance Office (BCCO).

E. MATERIAL CERTIFICATIONS

1. Notice of Acceptance No. **04-0721.01** issued to Elco Textron Inc. for "Tapcon Concrete Anchors" dated 03/09/2006, expiring on 01/08/2011.

2. Notice of Acceptance No. **03-0225.05** issued to Elco Textron Inc. for "Concrete-Flex SS4 Concrete & Masonry Screw" dated 05/22/2003, expiring on 04/14/2008.

F. STATEMENTS

1. Statement letter of conformance, no financial interest and independency, dated October 10, 2006, signed and sealed by Robert L. Clark, P.E.
(Submitted under NOA # 06-0717.05)

Jaime D. Gascon, P.E.
Chief, Product Control Division
NOA No. 07-0829.09
Expiration Date: January 02, 2013
Approval Date: November 22, 2007

NOTICE OF ACCEPTANCE: EVIDENCE SUBMITTED

F. STATEMENTS (Continuous)

2. Laboratory compliance letter for Test Report no. **FTL- 4854**, issued by Fenestration Testing Laboratory, Inc., dated March 9, 2006, signed and sealed by Edmundo Largaespada, P.E.
   (Submitted under NOA # 06-0717.05)

3. Laboratory compliance letter for Test Report no. **FTL-3475**, issued by Fenestration Testing Laboratory, Inc., dated July 11, 2002, signed and sealed by James G. Worth, P.E.
   (Submitted under NOA # 06-0717.05)

4. Laboratory compliance letter for Test Report no. **FTL-3481**, issued by Fenestration Testing Laboratory, Inc., dated July 30, 2002, signed and sealed by James G. Worth, P.E.
   (Submitted under NOA # 06-0717.05)

G. OTHER

1. Notice of Acceptance No. **06-0717.05**, issued to PGT Industries for their Series "HR-810 Mid-Rise Aluminum Horizontal Roller Window – Non- Impact, approved on 11/09/2006 and expiring on 01/02/2008.

Jaime D. Gascon, P.E.
Chief, Product Control Division
NOA No. 07-0829.09
Expiration Date: January 02, 2013
Approval Date: November 22, 2007

GENERAL NOTES: NON-IMPACT HORIZONTAL ROLLER WINDOW

1. GLAZING OPTIONS: A. 3/16" TEMPERED B. 1/4" TEMPERED

2. CONFIGURATIONS: OX, XO

3. DESIGN PRESSURES: (SEE TABLE 1.)
   B A. NEGATIVE DESIGN LOADS BASED ON TESTED PRESSURE AND GLASS TABLES ASTM E 1300-98 OR ASTM E 1300-02.
   B. POSITIVE DESIGN LOADS BASED ON WATER TEST PRESSURE AND GLASS TABLES ASTM E 1300-98 OR ASTM E 1300-02.

4. ANCHORAGE FOR MIAMI-DADE COUNTY: THE 33 1/3% STRESS INCREASE HAS NOT BEEN USED IN THE DESIGN OF THIS PRODUCT. SEE SHEETS 5 AND 6 FOR ANCHORAGE SPACING AND DETAILS.

5. MIAMI-DADE COUNTY APPROVED SHUTTERS ARE REQUIRED IN MIAMI-DADE AN WHERE IMPACT RESISTANCE IS REQUIRED.

6. FRAME AND PANEL CORNERS SEALED WITH NARROW JOINT SEALANT OR GASKET.

7. REFERENCE TEST REPORTS: FTL-3475, FTL-3481 AND FTL-4854.

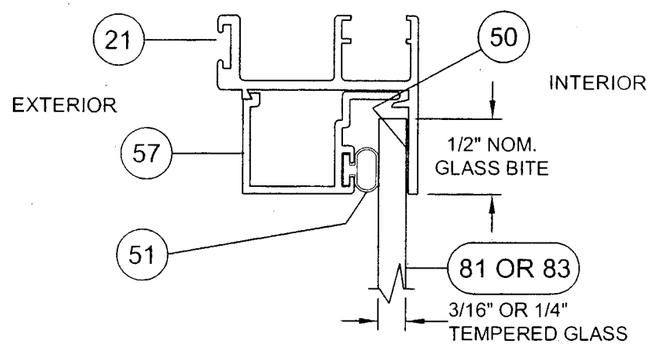

DETAIL A, GLAZING DETAIL

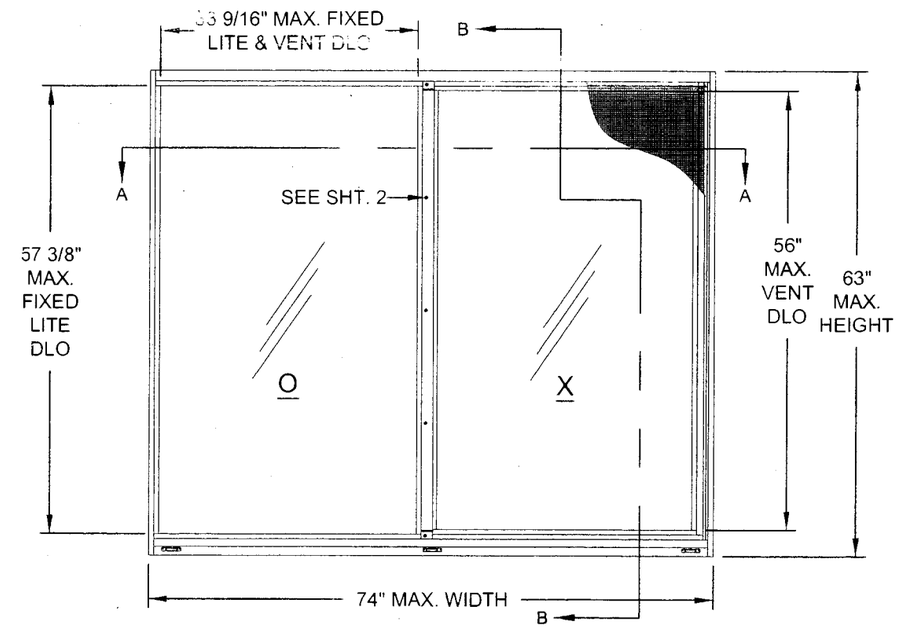

ELEVATION

NOA DRAWING MAP

	SHEET
GENERAL NOTES	1
GLAZING DETAILS	1
DESIGN PRESSURES	1
ELEVATION	1
VERT. SECTIONS	2
HORIZ. SECTIONS	2
PARTS LIST	3
EXTRUSIONS	4
CORNER DETAIL	2
ANCHORAGE	5-6

PRODUCT RENEWED
as complying with the Florida
Building Code
Acceptance No 07-0829.09
Expiration Date 01/02/2013
By
Miami-Dade Product Control
Division

PRODUCT REVISED
as complying with the Florida
Building Code
Acceptance No 06-0717.05
Expiration Date JAN. 2, 2008
By Manuel Perez
Miami-Dade Product Control
Division

HR810 (OX AND XO) DESIGN PRESSURES — TABLE 1.

WINDOW WIDTH	GLASS TYPE	WINDOW HEIGHT 24"		26"		36"		38 3/8"		48"		50 5/8"		54"		60"		63"	
48"	A, B	+90.0	-180.0	+90.0	-180.0	+90.0	-180.0	+90.0	-180.0	+90.0	-180.0	+90.0	-180.0	+90.0	-180.0	+90.0	-180.0	+90.0	-180.0
53 1/8"	A	+90.0	-180.0	+90.0	-180.0	+90.0	-180.0	+90.0	-180.0	+90.0	-180.0	+90.0	-180.0	+90.0	-180.0	+90.0	-179.1	+90.0	-168.3
	B	+90.0	-180.0	+90.0	-180.0	+90.0	-180.0	+90.0	-180.0	+90.0	-180.0	+90.0	-180.0	+90.0	-180.0	+90.0	-180.0	+90.0	-180.0
60"	A	+90.0	-180.0	+90.0	-180.0	+90.0	-180.0	+90.0	-180.0	+90.0	-180.0	+90.0	-180.0	+90.0	-180.0	+90.0	-164.7	+90.0	-154.4
	B	+90.0	-180.0	+90.0	-180.0	+90.0	-180.0	+90.0	-180.0	+90.0	-180.0	+90.0	-180.0	+90.0	-180.0	+90.0	-180.0	+90.0	-171.5
66"	A	+90.0	-180.0	+90.0	-177.7	+90.0	-169.7	+90.0	-169.7	+90.0	-169.7	+90.0	-169.7	+90.0	-169.7	+90.0	-154.8	+90.0	-144.9
	B	+90.0	-180.0	+90.0	-180.0	+90.0	-180.0	+90.0	-180.0	+90.0	-180.0	+90.0	-180.0	+90.0	-180.0	+90.0	-172.0	+90.0	-160.9
72"	A	+90.0	-160.4	+90.0	-154.5	+90.0	-142.6	+90.0	-142.6	+90.0	-142.6	+90.0	-142.6	+90.0	-142.6	+90.0	-142.6	+90.0	-137.2
	B	+90.0	-178.3	+90.0	-171.7	+90.0	-158.4	+90.0	-158.4	+90.0	-158.4	+90.0	-158.4	+90.0	-158.4	+90.0	-158.4	+90.0	-152.5
74"	A	+90.0	-154.0	+90.0	-148.1	+90.0	-135.1	+90.0	-135.0	+90.0	-135.0	+90.0	-135.0	+90.0	-135.0	+90.0	-135.0	+90.0	-135.0
	B	+90.0	-171.1	+90.0	-164.5	+90.0	-150.1	+90.0	-150.0	+90.0	-150.0	+90.0	-150.0	+90.0	-150.0	+90.0	-150.0	+90.0	-150.0

Revsd By:	Date:	Revisions:	
Revsd By: F.K.	Date: 9/28/06	Revisions: B	CHANGE NOTE 3 TO REFERENCE ASTM E 1300-02.
Revsd By: F.K.	Date: 3/1/06	Revisions: A	REDRAWN, ADDED NEW SILL, REVISED DP TABLES AND REVISED ANCHORAGE
Drawn By: F.K.	Date: 8/15/02	Checked By: J.J.	Date: 3/24/06

1070 TECHNOLOGY DRIVE
NOKOMIS, FL 34275

P.O. BOX 1529
NOKOMIS, FL 34274

PGT
Visibly Better

Description: NOTES, ELEVATION, GLAZING DETAIL & DP TABLE

Title: ALUM. HORIZONTAL ROLLER WINDOW, NON-IMPACT

Series/Model:	Scale:	Sheet:	Drawing No	Rev:
HR810	NTS	1 of 6	4126-1	B

10/10/06

Robert L. Clark, P.E.
PE #39712
Structural

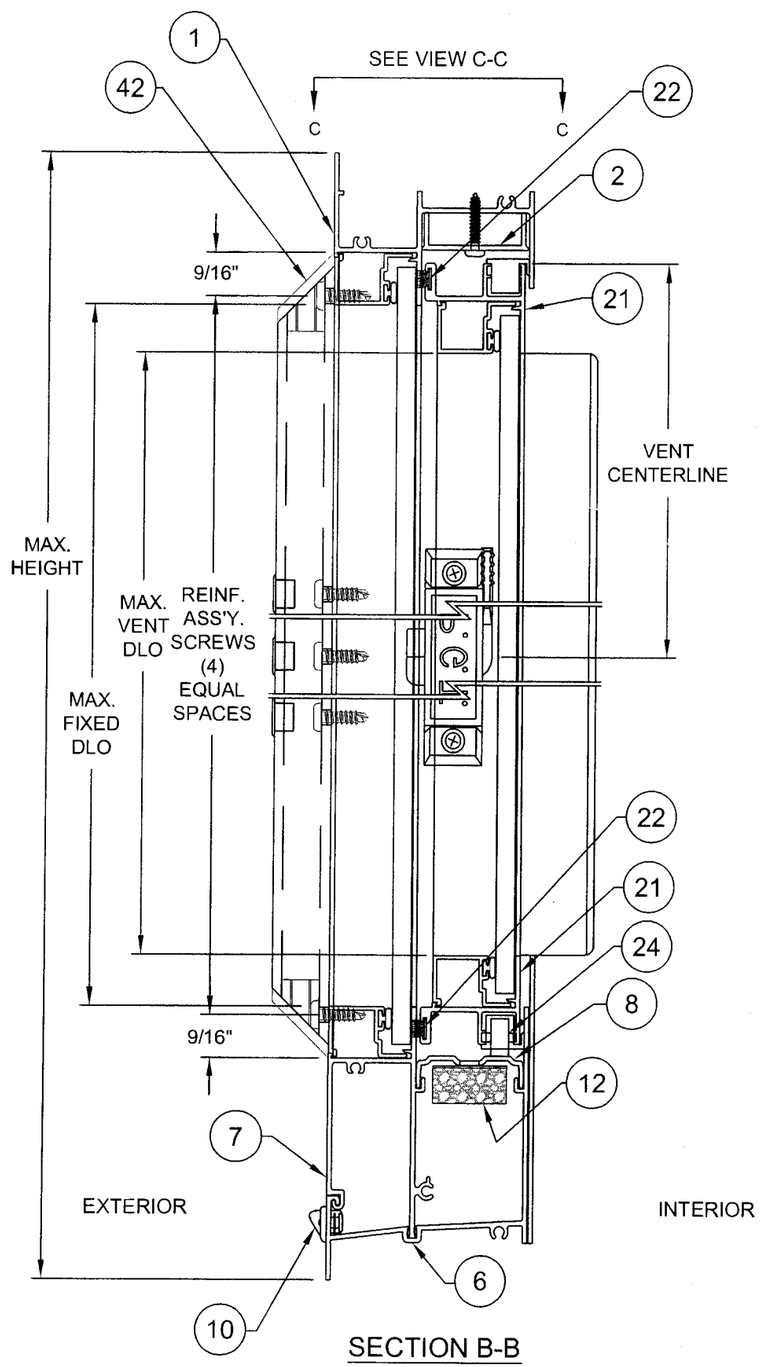

SECTION B-B
(VERTICAL SECTION)

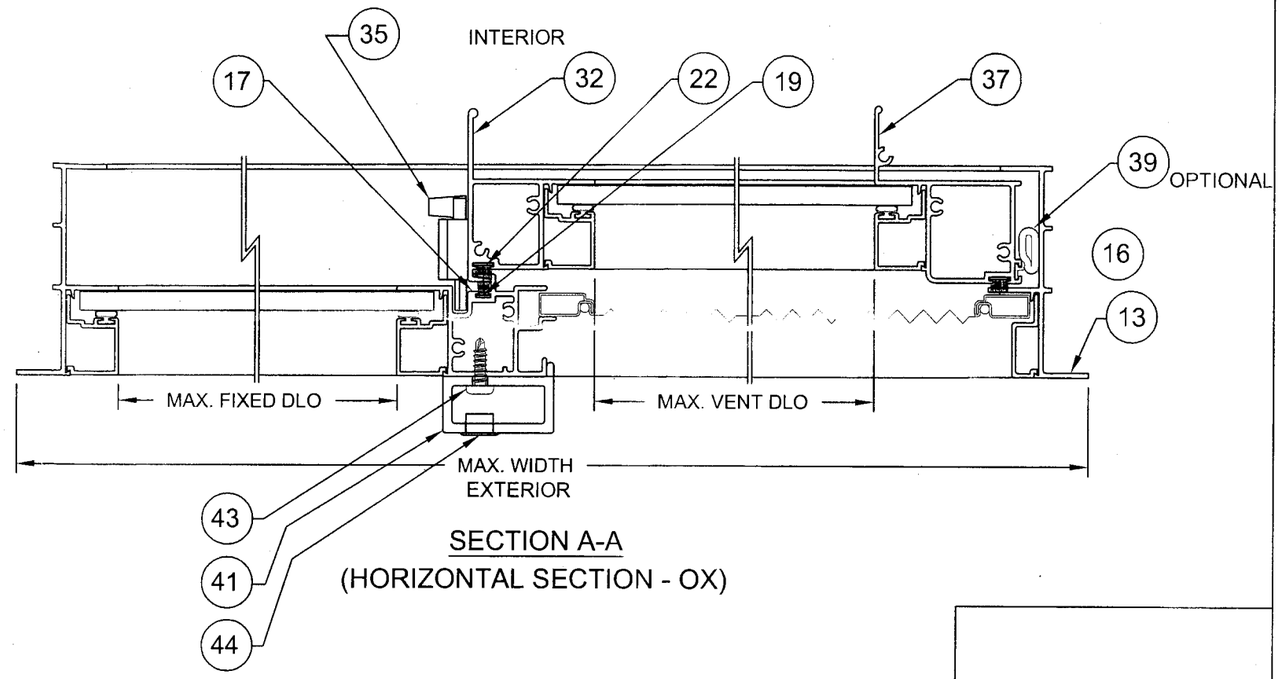

SECTION A-A
(HORIZONTAL SECTION - OX)

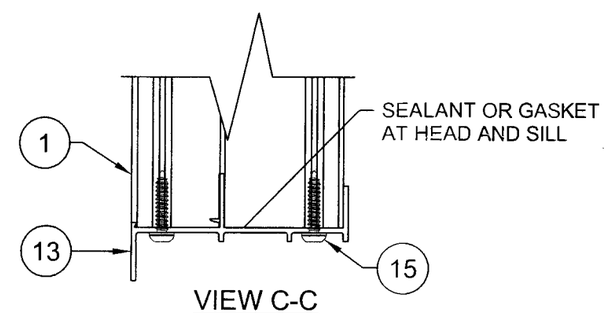

VIEW C-C
(FRAME CORNER CONSTRUCTION)

PRODUCT RENEWED
as complying with the Florida
Building Code
Acceptance No 07-0829.09
Expiration Date 01/02/2013
By
Miami Dade Product Control
Division

PRODUCT REVISED
as complying with the Florida
Building Code
Acceptance No 06-0717.05
Expiration Date JAN. 2, 2008
By Manuel Perez
Miami Dade Product Control
Division

Revsd By:	Date:	Revisions:	
Revsd By: F.K.	Date: 9/28/06	Revisions: B	NO CHANGE THIS SHEET
Revsd By: F.K.	Date: 3/1/06	Revisions: A	REDRAWN AND ADDED NEW SILL
Drawn By: F.K.	Date: 8/15/02	Checked By: J.J.	Date: 3/24/06

1070 TECHNOLOGY DRIVE
NOKOMIS, FL 34275

P.O. BOX 1529
NOKOMIS, FL 34274

PGT
Visibly Better

Description: SECTIONS

Title: ALUM. HORIZONTAL ROLLER WINDOW, NON-IMPACT

Series/Model:	Scale:	Sheet:	Drawing No.	Rev:
HR810	Half	2 of 6	4126-1	B

Robert L. Clark, P.E.
PE #39712
Structural

ITEM	DWG#	REV	DESCRIPTION	MAT'L	PGT#
1	4102	A	FLANGE FRAME HEAD	6063-T6 AL	612237
2	4025		SASH STOP (STD.) (ANTI LIFT CLIP)	6063-T5 AL	612244
3			#8 X 3/4 PH. PAN HEAD		7834AA
4	4053		SASH STOP COVER (SASH STOP)	6063-T5 AL	
6	4136		FLANGE FRAME SILL	6063-T6 AL	64136
7	4137		SILL ADAPTOR	6063-T6 AL	64137
8	4131		ROLLER TRACK	6063-T6 AL	64131
10	71298		WEEP HOLE COVER	POLYPROP.	71298
12	1626		ADHESIVE OPEN CELL FOAM PAD		7PAD1626
13	4002	A	FLANGE FRAME JAMB	6063-T6 AL	612225
14	4134		GASKET FOR MAIN FRAME SILL JOINT		[illegible]
15	1155		#8 X 1.000 QUAD PN. SMS		781PQA
16	4110	G	SCREEN ADAPTOR	6063-T5 AL	64110G
17	4054	B	FIXED MEETING RAIL	6063HD-T6 AL	64054A
19	4066		WSTP.,.187 X .230, FIN SEAL		64066G
21	4105		SASH TOP & BOTTOM RAIL	6063-T5 AL	612240
22	1683		WSTP.,.250 X .270 BACK, FIN SEAL		61683G
23	225-1		ROLLER HOUSING & GUIDE		42112HD
24	226		BRASS ROLLER WHEELS	BRASS	7BRWHL2
29	4128		HORIZONTAL ROLLER SASH TOP GUIDE	POLYPROP.	44128N
32	4006	D	SASH MEETING RAIL	6063HS-T6 AL	64006
33	1235		WSTP.,.170 X .270 BACK, FIN SEAL		67S16G
35	1096		SWEEP LATCH	DIE-CAST	71096
36	1016		#8 X .625 PH. FL. SMS		7858
37	4126		SASH SIDE RAIL	6063-T5 AL	64126
39	7070		BULB WEATHERSTRIP .187 X .275		67070K
40			LIFT RAIL COVER CAP		74078"C" L OR R
41	4063		MEETING RAIL REINF. TUBE, 3/4" X 1 1/2"	6063HS-T54 AL	64063
42	4064		MEETING RAIL REINF. TUBE, END CAP	POLYPROP.	44064
43	1179		#10 X 3/4" PH TEK SCREW		710X34PPSDX
44	947		3/8" DIA. HOLE PLUG	POLYPROP.	41722
50			GLAZING SILICONE, DOW 899, 995 OR EQUIVALENT		
51	1224		VINYL GLAZING BEAD BULB (THICK)		6TP247W,K
57	4014	B	GLAZING BEAD - 3/16" & 1/4"	6063-T5 AL	64014
58	4046	A	GLAZING BEAD - 3/16" & 1/4" W/ GRILL KIT	6063-T5 AL	644842
81	GLASS,		3/16" TEMPERED		
83	GLASS,		1/4" TEMPERED		
90	1014		SCREEN FRAME (HOR. & VER.)	3105-H14 AL	61014
91	1630		SCREEN CORNER KEY W/RINGS	POLYPROP.	71630
92	1631		SCREEN CORNER KEY W/OUT RINGS	POLYPROP.	71631
93	1073		SCREEN SPRING	ST.ST.	7CASP
94	1624		SCREEN SPLINE - .135 DIA. FOAM	EM PVC	61624K
95	1635		SCREEN SPLINE - .135 DIA. HARD	EM PVC	61635K
96			SCREEN	CLOTH	61816

Revsd By:	Date:	Revisions:	
Revsd By: F.K.	Date: 9/28/06	Revisions: B	NO CHANGE THIS SHEET
Revsd By: F.K.	Date: 3/1/06	Revisions: A	REDRAWN, NEW ITEMS 6, 7, 8 39 UPGRADE ITEMS 1, 10, 12, 13, 14, 16, 17, 32, 50, 57 & 58
Drawn By: F.K.	Date: 8/15/02	Checked By: J.J.	Date: 3/24/06

1070 TECHNOLOGY DRIVE
NOKOMIS, FL 34275

P.O. BOX 1529
NOKOMIS, FL 34274

PGT
Visibly Better

Description: PARTS LIST

Title: ALUM. HORIZONTAL ROLLER WINDOW, NON-IMPACT

Series/Model:	Scale:	Sheet:	Drawing No.	Rev:
HR810	NTS	3 of 6	4126-1	B

PRODUCT RENEWED
as complying with the Florida Building Code
Acceptance No 07-0829.09
Expiration Date 01/02/2013
By [signature]
Miami Dade Product Control Division

PRODUCT REVISED
as complying with the Florida Building Code
Acceptance No 06-0717.05
Expiration Date JAN. 2, 2008
By Manuel Perez
Miami Dade Product Control Division

10/10/06
Robert L. Clark, P.E.
PE #39712
Structural

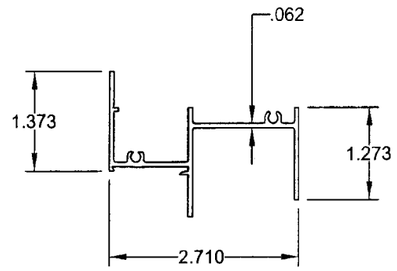

1 FLANGE FRAME HEAD
#4102A, 6063-T6

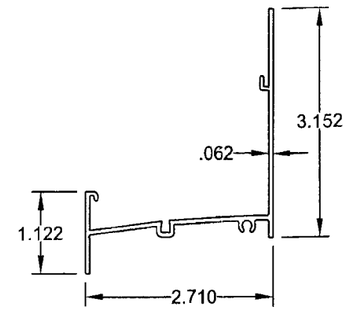

6 FLANGE FRAME SILL
#4136, 6063-T6

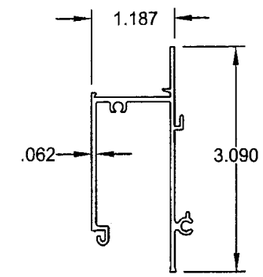

7 FRAME SILL ADAPTER
#4137, 6063-T6

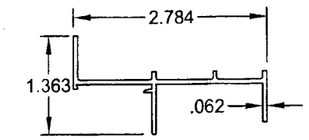

13 FLANGE FRAME JAMB
#4002A, 6063-T6

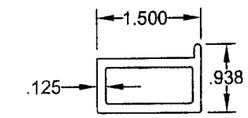

41 MEETING RAIL REINF. TUBE
#4063, 6063HS-T54

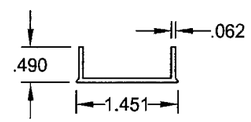

2 SASH STOP
#4025, 6063-T5

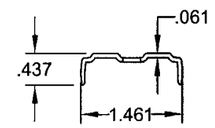

8 HORIZ. ROLLER TRACK
#4131, 6063-T6

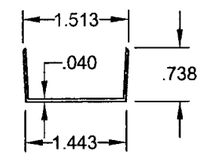

4 SASH STOP COVER
#4053, 6063-T5

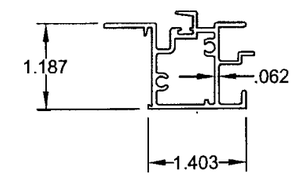

17 FIXED MEETING RAIL
#4054B, 6063HD-T6

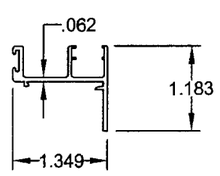

21 SASH TOP & BOTTOM RAIL
#4105, 6063-T5

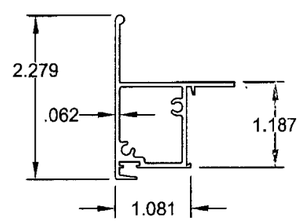

32 SASH MTG. RAIL
#4006D, 6063HS-T6

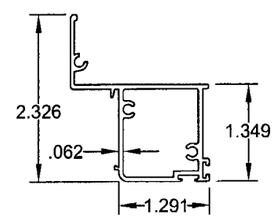

37 SASH SIDE RAIL
#4126, 6063-T5

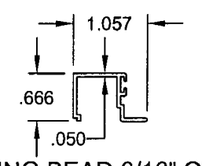

57 GLAZING BEAD 3/16" OR 1/4"
#4014B, 6063-T5

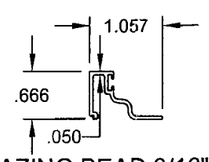

58 GLAZING BEAD 3/16" OR 1/4"
#4046A, 6063-T5
(USED W/ GRILL KIT)

PRODUCT RENEWED
as complying with the Florida
Building Code
Acceptance No 07-0824.09
Expiration Date 01/02/2013
By
Miami Dade Product Control
Division

PRODUCT REVISED
as complying with the Florida
Building Code
Acceptance No 06-0717.05
Expiration Date JAN. 2, 2008
By
Miami Dade Product Control
Division

Revsd By:	Date:	Revisions:	
Revsd By: F.K.	Date: 9/28/06	Revisions: B	NO CHANGE THIS SHEET
Revsd By: F.K.	Date: 3/1/06	Revisions: A	REDRAWN, NEW ITEMS 6, 7 & 8 UPGRADE ITEMS 1, 13, 17, 21, 32, 37, 55 & 56
Drawn By: F.K.	Date: 8/15/02	Checked By: J.J.	Date: 3/24/06

1070 TECHNOLOGY DRIVE
NOKOMIS, FL 34275

P.O. BOX 1529
NOKOMIS, FL 34274

PGT
Visibly Better

Description: EXTRUSIONS

Title: ALUM. HORIZONTAL ROLLER WINDOW, NON-IMPACT

Series/Model:	Scale:	Sheet:	Drawing No.	Rev:
HR810	Half	4 of 6	4126-1	B

10/10/06
Robert L. Clark, P.E.
PE #39712
Structural

ANCHOR QUANTITIES FOR XO AND OX WINDOWS - TABLE 2.

ANCHOR TYPE & SUBSTRATE >	GLASS TYPE A						GLASS TYPE B					
	2,3, WOOD		2, CONC		1, CONC		2,3, WOOD		2, CONC		1, CONC	
WINDOW SIZE	ZONES		ZONES		ZONES		ZONES		ZONES		ZONES	
W x H	HEAD & SILL	JAMBS	HEAD & SILL	JAMBS	HEAD & SILL	JAMBS	HEAD & SILL	JAMBS	HEAD & SILL	JAMBS	HEAD & SILL	JAMBS
26.500 x 36.000	1+C3+1	2	1+C3+1	2	1+C3+1	2	1+C3+1	2	1+C3+1	2	1+C3+1	2
38.375	1+C3+1	2	1+C3+1	2	1+C3+1	2	1+C3+1	2	1+C3+1	2	1+C3+1	2
48.000	1+C3+1	3	1+C3+1	3	1+C3+1	3	1+C3+1	3	1+C3+1	3	1+C3+1	3
50.625	1+C3+1	3	1+C3+1	3	1+C3+1	3	1+C3+1	3	1+C3+1	3	1+C3+1	3
54.000	1+C3+1	3	1+C3+1	3	1+C3+1	3	1+C3+1	3	1+C3+1	3	1+C3+1	3
60.000	1+C3+1	4	1+C3+1	3	1+C3+1	3	1+C3+1	4	1+C3+1	3	1+C3+1	3
63.000	1+C4+1	4	1+C3+1	3	1+C3+1	3	1+C4+1	4	1+C3+1	3	1+C3+1	3
37.000 x 36.000	1+C3+1	3	1+C3+1	2	1+C3+1	2	1+C3+1	3	1+C3+1	2	1+C3+1	2
38.375	1+C3+1	3	1+C3+1	2	1+C3+1	2	1+C3+1	3	1+C3+1	2	1+C3+1	2
48.000	1+C4+1	4	1+C3+1	3	1+C3+1	3	1+C4+1	4	1+C3+1	3	1+C3+1	3
50.625	1+C4+1	4	1+C3+1	3	1+C3+1	3	1+C4+1	4	1+C3+1	3	1+C3+1	3
54.000	1+C4+1	4	1+C4+1	3	1+C3+1	3	1+C4+1	4	1+C4+1	3	1+C3+1	3
60.000	1+C5+1	5	1+C4+1	3	1+C3+1	3	1+C5+1	5	1+C4+1	3	1+C3+1	3
63.000	1+C5+1	5	1+C4+1	3	1+C3+1	3	1+C5+1	5	1+C4+1	3	1+C3+1	3
48.000 x 36.000	2+C3+2	3	2+C3+2	2	1+C3+1	2	2+C3+2	3	2+C3+2	2	1+C3+1	2
38.375	2+C3+2	3	2+C3+2	2	1+C3+1	2	2+C3+2	3	2+C3+2	2	1+C3+1	2
48.000	2+C4+2	4	2+C4+2	3	1+C3+1	3	2+C4+2	4	2+C4+2	3	1+C3+1	3
50.625	2+C5+2	5	2+C4+2	3	1+C3+1	3	2+C5+2	5	2+C4+2	3	1+C3+1	3
54.000	2+C5+2	5	2+C4+2	3	1+C3+1	3	2+C5+2	5	2+C4+2	3	1+C3+1	3
60.000	2+C6+2	6	2+C5+2	4	1+C4+1	3	2+C6+2	6	2+C5+2	4	1+C4+1	3
63.000	2+C6+2	6	2+C5+2	4	1+C4+1	3	2+C6+2	6	2+C5+2	4	1+C4+1	3
53.125 x 36.000	2+C3+2	3	2+C3+2	2	1+C3+1	2	2+C3+2	3	2+C3+2	2	1+C3+1	2
38.375	2+C4+2	4	2+C3+2	2	1+C3+1	2	2+C4+2	4	2+C3+2	2	1+C3+1	2
48.000	2+C5+2	5	2+C4+2	3	1+C3+1	3	2+C5+2	5	2+C4+2	3	1+C3+1	3
50.625	2+C5+2	5	2+C4+2	3	1+C3+1	3	2+C5+2	5	2+C4+2	3	1+C3+1	3
54.000	2+C5+2	5	2+C5+2	3	1+C4+1	3	2+C5+2	5	2+C5+2	3	1+C4+1	3
60.000	2+C6+2	6	2+C5+2	4	1+C4+1	3	2+C6+2	6	2+C5+2	4	1+C4+1	3
63.000	2+C6+2	6	2+C5+2	4	1+C4+1	3	2+C7+2	7	2+C5+2	4	1+C4+1	3
60.000 x 36.000	3+C3+3	3	2+C3+2	2	2+C3+2	2	3+C3+3	3	2+C3+2	2	2+C3+2	2
38.375	3+C4+3	4	2+C3+2	2	2+C3+2	2	3+C4+3	4	2+C3+2	2	2+C3+2	2
48.000	3+C5+3	5	2+C4+2	3	2+C3+2	3	3+C5+3	5	2+C4+2	3	2+C3+2	3
50.625	3+C5+3	5	2+C4+2	3	2+C3+2	3	3+C5+3	5	2+C4+2	3	2+C3+2	3
54.000	3+C6+3	6	2+C5+2	4	2+C4+2	3	3+C6+3	6	2+C5+2	4	2+C4+2	3
60.000	2+C6+2	6	2+C5+2	4	2+C4+2	3	3+C7+3	7	2+C6+2	4	2+C4+2	3
63.000	2+C6+2	6	2+C5+2	4	2+C4+2	3	2+C7+2	7	2+C6+2	4	2+C4+2	3
66.000 x 36.000	3+C3+3	3	2+C3+2	2	2+C3+2	2	3+C3+3	3	3+C3+3	2	2+C3+2	2
38.375	3+C4+3	4	2+C3+2	2	2+C3+2	2	3+C4+3	4	3+C3+3	2	2+C3+2	2
48.000	3+C5+3	5	2+C4+2	3	2+C3+2	3	3+C5+3	5	3+C4+3	3	2+C3+2	3
50.625	3+C5+3	5	2+C4+2	3	2+C3+2	3	3+C6+3	6	3+C5+3	4	2+C4+2	3
54.000	3+C6+3	6	2+C5+2	4	2+C4+2	3	3+C6+3	6	3+C5+3	4	2+C4+2	3
60.000	3+C6+3	6	2+C5+2	4	2+C4+2	3	3+C7+3	7	2+C6+2	4	2+C4+2	3
63.000	2+C6+2	6	2+C5+2	4	2+C4+2	3	3+C7+3	7	2+C6+2	4	2+C4+2	3
74.000 x 36.000	3+C3+3	3	2+C3+2	2	2+C3+2	2	3+C3+3	3	3+C3+3	2	2+C3+2	2
38.375	3+C3+3	3	2+C3+2	2	2+C3+2	2	3+C3+3	3	3+C3+3	2	2+C3+2	2
48.000	3+C4+3	4	2+C4+2	3	2+C3+2	3	3+C5+3	5	3+C4+3	3	2+C3+2	3
50.625	3+C5+3	5	2+C4+2	3	2+C3+2	3	3+C5+3	5	3+C4+3	3	2+C3+2	3
54.000	3+C5+3	5	2+C4+2	3	2+C3+2	3	3+C5+3	5	3+C5+3	4	2+C4+2	3
60.000	3+C6+3	6	2+C5+2	4	2+C4+2	3	3+C6+3	6	3+C5+3	4	2+C4+2	3
63.000	3+C6+3	6	2+C5+2	4	2+C4+2	3	3+C7+3	7	3+C6+3	4	2+C4+2	3

NOTES:

1. ANCHOR TYPES: (B)
   1 - 5/16" ELCO TAPCONS
   2 - 1/4" ELCO SS4 CRETE-FLEX
   3 - #12 STEEL SCREWS (G5)

2. GLASS TYPES:
   A. 3/16" TEMPERED GLASS
   B. 1/4" TEMPERED GLASS

3. ANCHOR LOCATIONS ARE BASED ON THE FOLLOWING TESTED DIMENSIONS AT FULL DP:

   HEAD & SILL: 10 1/2" MAX. ON EACH SIDE OF AND ON MEETING RAIL CENTERLINE..
   JAMBS: 9" MAX. FROM CORNERS AND 22 1/2" MAX. O.C.

4. INSTALL XO AND OX WINDOWS IN MIAMI-DADE COUNTY PER ADJACENT TABLE. FOR WINDOW SIZES NOT SHOWN, GO TO NEXT LARGER WINDOW IN TABLE.

(B) TABLE KEY: 2+C3+2 | 3 ← ANCHOR QUANTITY PER JAMB

HEAD AND SILL ANCHOR QUANTITY. (2) ANCHORS LEFT OF MEETING RAIL PLUS A CLUSTER OF (3) CENTERED ON THE MEETING RAIL PLUS (2) ANCHORS RIGHT OF THE MEETING RAIL FOR A TOTAL OF (7) AT THE HEAD AND (7) AT THE SILL.

(3" MIN. O.C. ANCHOR SPACING)

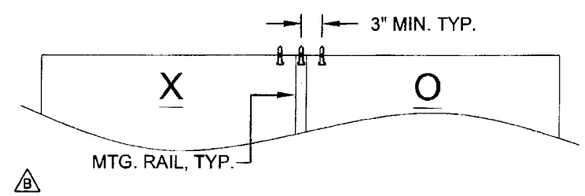

(B) EXAMPLE CLUSTER W/ ODD QTY. OF ANCHORS

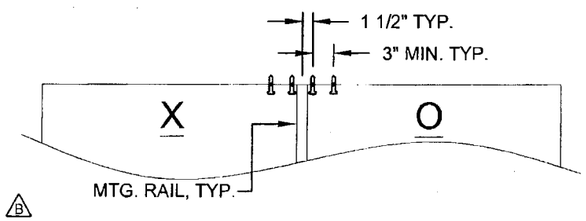

(B) EXAMPLE CLUSTER W/ EVEN QTY. OF ANCHORS

PRODUCT RENEWED
as complying with the Florida Building Code
Acceptance No 07-0829.09
Expiration Date 01/02/2013
By
Miami Dade Product Control Division

PRODUCT REVISED
as complying with the Florida Building Code
Acceptance No 06-0717.05
Expiration Date JAN. 2, 2008
By
Miami Dade Product Control Division

Revsd By:	Date:	Revisions:	
Revsd By: F.K.	Date: 9/28/06	Revisions: B	REVISE TABLE 2 HEAD & SILL ANCHORS. REMOVE 1/4" ELCO TAPCON. REVISE CLUSTER DETAILS.
Revsd By: F.K.	Date: 3/1/06	Revisions: A	NEW SHEET
Drawn By: F.K.	Date: 8/15/02	Checked By: J.J.	Date: 3/24/06

1070 TECHNOLOGY DRIVE
NOKOMIS, FL 34275

P.O. BOX 1529
NOKOMIS, FL 34274

PGT Visibly Better

Description: ANCHOR SPACING

Title: ALUM. HORIZONTAL ROLLER WINDOW, NON-IMPACT

Series/Model:	Scale:	Sheet:	Drawing No.	Rev:
HR810	Half	5 of 6	4126-1	B

10/10/06

Robert L. Clark, P.E.
PE #39712
Structural

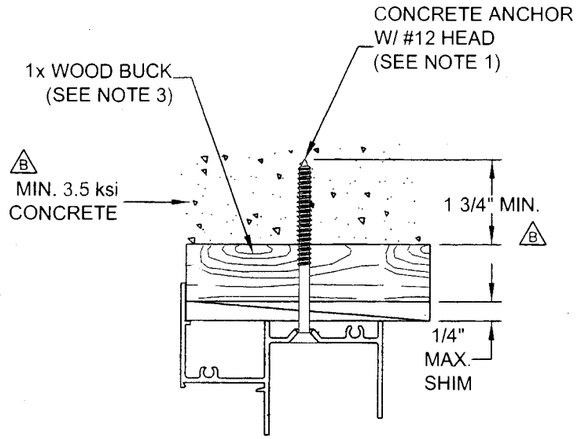

DETAIL A

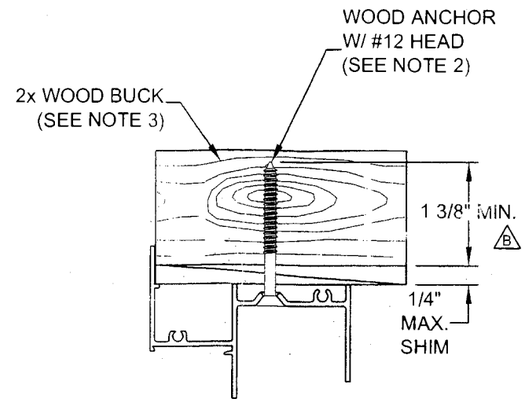

DETAIL B

TYPICAL HEAD SECTIONS

EXTERIOR INTERIOR
(HEAD & SILL DETAILS)

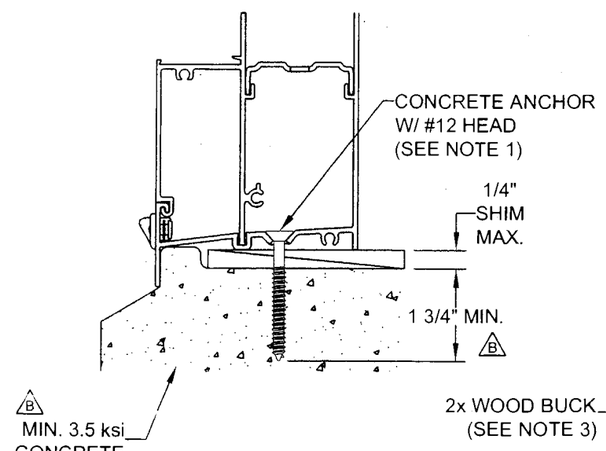

DETAIL C

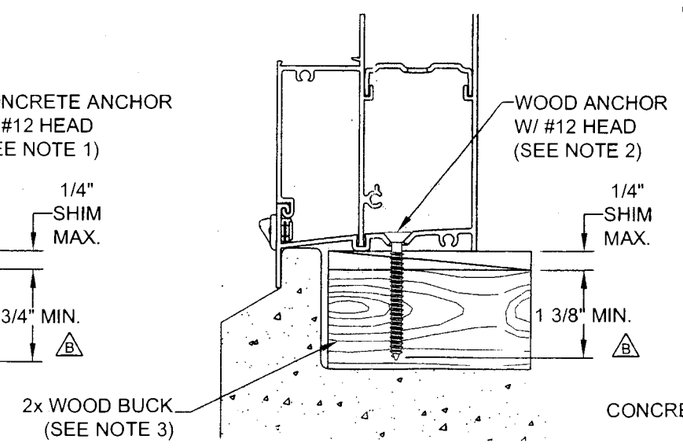

DETAIL D

TYPICAL SILL SECTIONS

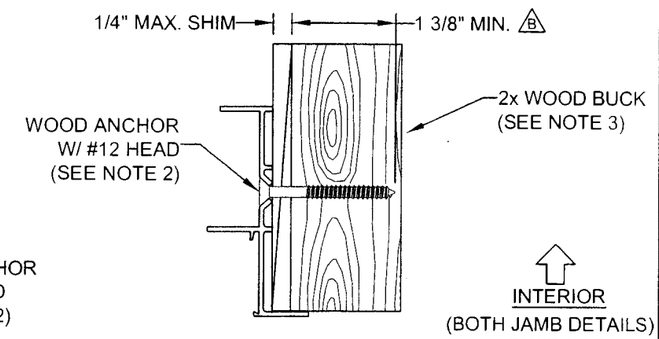

DETAIL E

INTERIOR
(BOTH JAMB DETAILS)
EXTERIOR

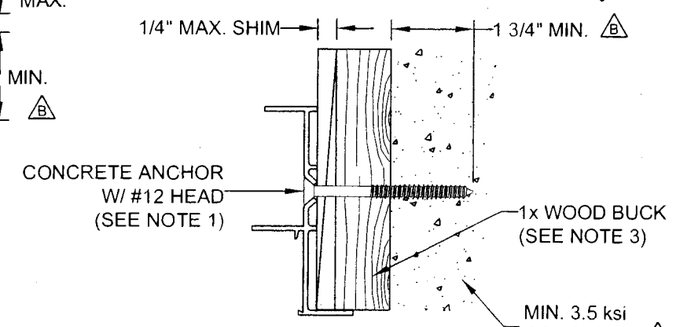

DETAIL F

TYPICAL JAMB SECTIONS

NOTES:

1. (B) FOR CONCRETE APPLICATIONS IN MIAMI-DADE COUNTY, USE ONLY MIAMI-DADE COUNTY APPROVED 5/16" ELCO TAPCONS OR 1/4" SS4 CRETE-FLEX. MINIMUM DISTANCE FROM ANCHOR TO CONCRETE EDGE IS 2".
2. (B) FOR WOOD APPLICATIONS IN MIAMI-DADE COUNTY, USE #12 STEEL SCREWS (G5) OR ELCO 1/4" SS4 CRETE-FLEX.
3. WOOD BUCKS DEPICTED IN THE SECTIONS ON THIS PAGE AS 1x ARE BUCKS WHOSE TOTAL THICKNESS IS LESS THAN 1 1/2". 1x WOOD BUCKS ARE OPTIONAL IF UNIT CAN BE INSTALLED DIRECTLY TO SOLID CONCRETE. WOOD BUCKS DEPICTED AS 2x ARE 1 1/2" THICK OR GREATER. INSTALLATION TO THE SUBSTRATE OF WOOD BUCKS TO BE ENGINEERED BY OTHERS OR AS APPROVED BY AUTHORITY HAVING JURISDICTION.
4. FOR ATTACHMENT TO ALUMINUM: THE MATERIAL SHALL BE A MINIMUM STRENGTH OF 6063-T5 AND A MINIMUM OF 1/8" THICK. THE ALUMINUM STRUCTURAL MEMBER SHALL BE OF A SIZE TO PROVIDE FULL SUPPORT TO THE WINDOW FRAME SIMILAR TO THAT SHOWN IN THESE DETAILS FOR 2x WOOD BUCKS. THE ANCHOR SHALL BE A #12 SHEET METAL SCREW WITH FULL ENGAGEMENT INTO THE ALUMINUM. IF THESE CRITERIA ARE MET, THE RESPECTIVE DESIGN PRESSURES AND ANCHORAGE SPACING FOR TAPCONS MAY BE USED.

PRODUCT RENEWED
as complying with the Florida Building Code
Acceptance No 07-0829.09
Expiration Date 01/02/2013
By
Miami Dade Product Control Division

PRODUCT REVISED
as complying with the Florida Building Code
Acceptance No 06-0717.05
Expiration Date JAN. 2, 2008
By Manuel Sera
Miami Dade Product Control Division

10/10/06
Robert L. Clark, P.E.
PE #39712
Structural

Revsd By:	Date:	Revisions:	
Revsd By: F.K.	Date: 9/28/06	Revisions: B	SPEC CONCRETE & REVISE NOTES 1 & 2 AND UPGRADE ANCHOR EMBEDMENT
Revsd By: F.K.	Date: 3/1/06	Revisions: A	REDRAWN, ADDED NEW SILL AND REVISED ANCHORAGE
Drawn By: F.K.	Date: 8/15/02	Checked By: J.J.	Date: 3/24/06

1070 TECHNOLOGY DRIVE
NOKOMIS, FL 34275

P.O. BOX 1529
NOKOMIS, FL 34274

PGT
Visibly Better

Description: ANCHORAGE DETAILS

Title: ALUM. HORIZONTAL ROLLER WINDOW, NON-IMPACT

Series/Model:	Scale:	Sheet:	Drawing No	Rev:
HR810	Half	6 of 6	4126-1	B