MIAMI-DADE COUNTY, FLORIDA
METRO-DADE FLAGLER BUILDING
140 WEST FLAGLER STREET, SUITE 1603
MIAMI, FLORIDA 33130-1563
(305) 375-2901 FAX (305) 372-6339
www.miamidade.gov/buildingcode

BUILDING CODE COMPLIANCE OFFICE (BCCO)
PRODUCT CONTROL DIVISION

NOTICE OF ACCEPTANCE (NOA)

Tischler und Sohn (USA), Ltd.
Six Suburban Avenue
Stamford, CT 06901

SCOPE:

This NOA is being issued under the applicable rules and regulations governing the use of construction materials. The documentation submitted has been reviewed by Miami-Dade County Product Control Division and accepted by the Board of Rules and Appeals (BORA) to be used in Miami Dade County and other areas where allowed by the Authority Having Jurisdiction (AHJ).

This NOA shall not be valid after the expiration date stated below. The Miami-Dade County Product Control Division (In Miami Dade County) and/or the AHJ (in areas other than Miami Dade County) reserve the right to have this product or material tested for quality assurance purposes. If this product or material fails to perform in the accepted manner, the manufacturer will incur the expense of such testing and the AHJ may immediately revoke, modify, or suspend the use of such product or material within their jurisdiction. BORA reserves the right to revoke this acceptance, if it is determined by Miami-Dade County Product Control Division that this product or material fails to meet the requirements of the applicable building code.

This product is approved as described herein, and has been designed to comply with the Florida Building Code, including the High Velocity Hurricane Zone.

DESCRIPTION: Series "Direct Glazed Impact" Wood Fixed Window –L.M.I.

APPROVAL DOCUMENT: Drawing No. **1514**, titled "Series Direct Glazed Fixed Impact Window", sheets 1 through 6 of 6, dated 01/14/2007, prepared by W. W. Schaefer Engineering & Consultant, P. A., dated 08/13/2007, signed and sealed by Warren W. Schaefer, P.E., bearing the Miami-Dade County Product Control Approval stamp with the Notice of Acceptance number and Approval date by the Miami-Dade County Product Control Division.

MISSILE IMPACT RATING: Large Missile and Small Missile Impact Resistant

LABELING: Each unit shall bear a permanent label with the manufacturer's name or logo, city, state and following statement: "Miami-Dade County Product Control Approved", unless otherwise noted herein.

RENEWAL of this NOA shall be considered after a renewal application has been filed and there has been no change in the applicable building code negatively affecting the performance of this product.

TERMINATION of this NOA will occur after the expiration date or if there has been a revision or change in the materials, use, and/or manufacture of the product or process. Misuse of this NOA as an endorsement of any product, for sales, advertising or any other purposes shall automatically terminate this NOA. Failure to comply with any section of this NOA shall be cause for termination and removal of NOA.

ADVERTISEMENT: The NOA number preceded by the words Miami-Dade County, Florida, and followed by the expiration date may be displayed in advertising literature. If any portion of the NOA is displayed, then it shall be done in its entirety.

INSPECTION: A copy of this entire NOA shall be provided to the user by the manufacturer or its distributors and shall be available for inspection at the job site at the request of the Building Official.

This NOA consists of this page 1 and evidence pages E-1 and E-2, as well as approval document mentioned above.

The submitted documentation was reviewed by **Jaime D. Gascon, P.E.**

PRODUCT CONTROL ACCEPTED

J Gascon
12/7/07

NOA No. 07-0829.12
Expiration Date: December 27, 2012
Approval Date: December 27, 2007

Tischler und Sohn (USA), Ltd.

NOTICE OF ACCEPTANCE: EVIDENCE SUBMITTED

A. DRAWINGS

1. Manufacturer's die drawings and sections.

2. Drawing No. **1514**, titled "Series Direct Glazed Fixed Impact Window", sheets 1 through 6 of 6, dated 01/14/2007, prepared by W. W. Schaefer Engineering & Consultant, P. A., dated 08/13/2007, signed and sealed by Warren W. Schaefer, P.E.

B. TESTS

1. Test reports on 1) Air Infiltration Test, per FBC, TAS 202-94
   2) Uniform Static Air Pressure Test, Loading per FBC TAS 202-94
   3) Water Resistance Test, per FBC, TAS 202-94
   4) Large Missile Impact Test per FBC, TAS 201-94
   5) Cyclic Wind Pressure Loading per FBC, TAS 203-94
   6) Forced Entry Test, per FBC 2411 3.2.1, TAS 202-94

   along with marked-up drawings and installation diagram of Wood Fixed Window, prepared by Architectural Testing, Inc., Test Report No. **ATI-72691.01-109-18**, dated 06/26/2007, signed and sealed by Michael D. Stremmel, P.E.

2. Test reports on 1) Air Infiltration Test, per FBC, TAS 202-94
   2) Uniform Static Air Pressure Test, Loading per FBC TAS 202-94
   3) Water Resistance Test, per FBC, TAS 202-94
   4) Large Missile Impact Test per FBC, TAS 201-94
   5) Cyclic Wind Pressure Loading per FBC, TAS 203-94
   6) Forced Entry Test, per FBC 2411 3.2.1, TAS 202-94

   along with marked-up drawings and installation diagram of Wood Fixed Window, prepared by Architectural Testing, Inc., Test Report No. **ATI-72472.01-109-18**, dated 07/03/2007, signed and sealed by Michael D. Stremmel, P.E.

C. CALCULATIONS

1. Anchor verification calculations and structural analysis, complying with FBC-2004, prepared by PTC, LLC, dated 06/11/2007, signed and sealed by Eric S. Nielsen, P.E. **Complies with ASTM E1300-98/02**

D. QUALITY ASSURANCE

1. Miami Dade Building Code Compliance Office (BCCO).

Jaime D. Gascon, P.E.
Chief, Product Control Division
NOA No. 07-0829.12
Expiration Date: December 27, 2012
Approval Date: December 27, 2007

NOTICE OF ACCEPTANCE: EVIDENCE SUBMITTED

E. MATERIAL CERTIFICATIONS

1. Notice of Acceptance No. **06-0216.06** issued to Solutia Inc. for their "**Saflex IIIG Clear or colored Interlayer**" dated 05/04/06, expiring on 05/21/11.

2. Notice of Acceptance No. **03-0415.13** issued to Solutia Inc. for their "**Vanceva Composites used for lamination of glass**" dated December 11, 2003, expiring on December 11, 2008.

F. STATEMENTS

1. Statement letter of conformance, no financial interest and compliance, dated 05/29/2007, by W. W. Schaefer Engineering & Consultant, P. A., signed and sealed by Warren W. Schaefer, P.E.

2. Laboratory compliance letter for Test Report No.'s **ATI-72691.01-109-18** and **ATI-72472.01-109-18**, issued by Architectural Testing, Inc., dated July 03, 2007, signed and sealed by Michael D. Stremmel, P.E.

G. OTHER

1. None

Jaime D. Gascon, P.E.
Chief, Product Control Division
NOA No. 07-0829.12
Expiration Date: December 27, 2012
Approval Date: December 27, 2007

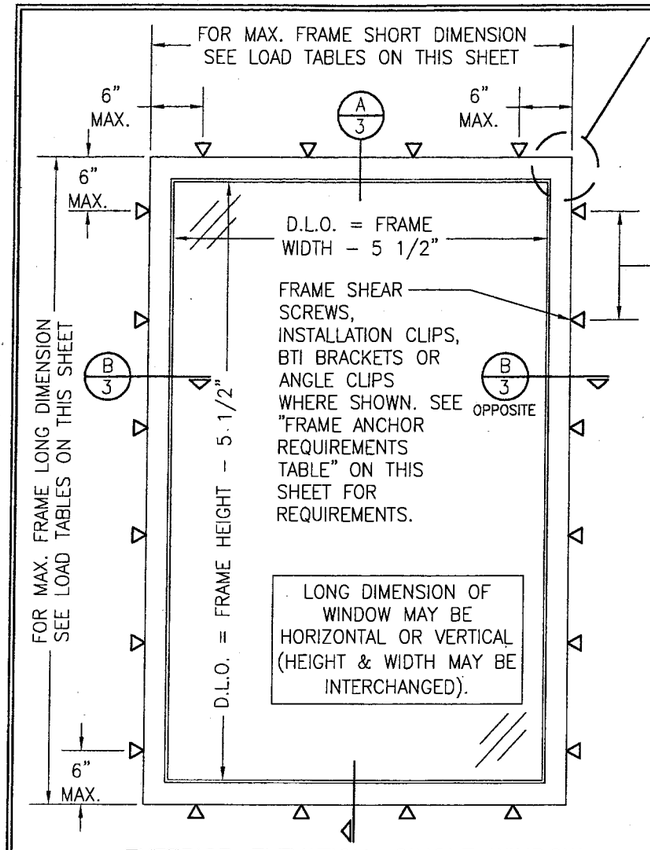

EXTERIOR ELEVATION; SINGLE WINDOW

SCALE: N.T.S.

RECTANGULAR WINDOWS SHOWN. ANCHORING OF SHAPED WINDOWS IS THE SAME WITH REQUIRED ANCHOR SPACING ALONG THE FRAME CIRCUMFERENCE BEING THE SAME AS SPECIFIED FOR A STRAIGHT FRAME.

CORNER CONSTRUCTION

RECTANGULAR JAMB CORNERS: MORTISE & TENON CONSTRUCTION JOINED & GLUED WITH PONAL SUPER 3 WOOD GLUE OR EQUIVALENT.
ARCHED JAMB CORNERS: ARCHED FRAME BUTTED TO FRAME, JOINED WITH ONE(1) NO.14 X 3" WOOD SCREW, & GLUED WITH PONAL SUPER 3 WOOD GLUE OR EQUIVALENT.
HALF ROUND JAMB CORNERS: FINGER JOINT CONSTRUCTION JOINED & GLUED WITH PONAL SUPER 3 WOOD GLUE OR EQUIVALENT.

ANCHOR SPACING (ALL SIDES OF WINDOW)

JOB REQUIRED DESIGN PRESSURE	WINDOW FRAME SHORT DIMENSION	MAXIMUM ALLOWABLE ANCHOR SPACING
70 PSF & LESS	OVER 48"	12"
	48" & LESS	18"
OVER 70 PSF	UP TO 72"	12"

FRAME ANCHOR REQUIREMENTS TABLE

OPENING TYPE (SUBSTRATE)	FRAME/CLIP/BRACKET TO OPENING FASTENER TYPE	MINIMUM EMBED	MINIMUM EDGE DIST.
FRAME SHEAR SCREWS			
2X_ WOOD FRAME OR BUCK (MIN. GR. 3 & G=0.55)	NO. 14 SMS/WOOD SCREW OR 1/4" BTI SCREW	1 1/4"	3/4"
MIN. 18 GA. 33 KSI METAL STUD	(2)1/4-14 SELF TAP/DRILLING SCREW	FULL	1/2"
MIN. 1/8" THK A36 STEEL	(2)1/4-14 SELF TAP/DRILLING SCREW	FULL	1/2"
MIN. 1/8" THK 6063-T5 ALUM.	(2)1/4-14 SELF TAP/DRILLING SCREW	FULL	1/2"
C-90 CMU/2500 PSI CONCRETE	(1) 1/4" CONCRETE SCREW	1 1/4"	2"
INSTALLATION CLIP SCREWS			
2X_ WOOD FRAME OR BUCK (MIN. GR. 3 & G=0.55)	NO. 12 X 1 1/2" SMS	1 3/8"	3/4"
MIN. 18 GA. 33 KSI METAL STUD	(2)12-14 SELF TAP/DRILLING SCREW	FULL	1/2"
MIN. 1/8" THK A36 STEEL	(2)12-14 SELF TAP/DRILLING SCREW	FULL	1/2"
MIN. 1/8" THK 6063-T5 ALUM.	(2)12-14 SELF TAP/DRILLING SCREW	FULL	1/2"
C-90 CMU/2500 PSI CONCRETE	(1) 1/4" CONCRETE SCREW	1 1/4"	2"
BTI BRACKET & ANGLE CLIP SCREWS			
2X_ WOOD FRAME OR BUCK (MIN. GR. 3 & G=0.55)	NO. 8 X 1 1/2" SMS	1 1/8"	3/4"
MIN. 18 GA. 33 KSI METAL STUD	(2) 8-18 SELF TAP/DRILLING SCREW	FULL	1/2"
MIN. 1/8" THK A36 STEEL	(2) 8-18 SELF TAP/DRILLING SCREW	FULL	1/2"
MIN. 1/8" THK 6063-T5 ALUM.	(2) 8-18 SELF TAP/DRILLING SCREW	FULL	1/2"

(1) CONCRETE SCREWS SHALL BE ELCO OR ITW RAMSET/RED HEAD TAPCONS OR HILTI KWIK-CON II (HARDENED STEEL OR S.S.).
(2) ALL SELF TAP/DRILLING SCREWS SHALL BE MIN. GR. 5

ALLOWABLE SINGLE WINDOW DESIGN PRESSURE

MAXIMUM FRAME LONG DIMENSION (IN.)	MAXIMUM FRAME SHORT DIMENSION (IN.)	ALLOWABLE PRESSURE (POS. & NEG. PSF UNLESS SHOWN OTHERWISE)					
		GLASS OPTION 1	GLASS OPTION 2		GLASS OPTION 3	GLASS OPTION 4	GLASS OPTION 5
			POSITIVE	NEGATIVE			
144	60	X	70.0	70.0	70.0	X	X
	40	70.0	70.0	85.0	70.0	X	X
	36	70.0	70.0	85.0	70.0	X	70.0
	32	70.0	70.0	85.0	70.0	70.0	70.0
132	65	X	70.0	70.0	70.0	X	X
	43	70.0	70.0	85.0	70.0	X	X
	39	70.0	70.0	85.0	70.0	X	70.0
	35	70.0	70.0	85.0	70.0	70.0	70.0
120	72	X	70.0	70.0	70.0	X	X
	48	70.0	70.0	85.0	70.0	X	X
	43	70.0	70.0	85.0	70.0	X	70.0
	38	70.0	70.0	85.0	70.0	70.0	70.0
108	72	X	70.0	70.0	70.0	X	X
	53	67.8	70.0	85.0	70.0	X	X
	48	70.0	70.0	85.0	70.0	X	66.0
	42	70.0	70.0	85.0	70.0	70.0	70.0
96	72	X	70.0	70.0	70.0	X	X
	60	67.7	70.0	85.0	70.0	X	X
	54	70.0	70.0	85.0	70.0	X	68.1
	48	70.0	70.0	85.0	70.0	67.3	70.0
	46	70.0	70.0	85.0	70.0	70.0	70.0
84	72	X	70.0	70.0	70.0	X	X
	68	70.0	70.0	85.0	70.0	X	X
	61	70.0	70.0	85.0	70.0	X	70.0
	54	70.0	70.0	85.0	70.0	70.0	70.0
78	72	70.0	70.0	85.0	70.0	X	X
	66	70.0	70.0	85.0	70.0	X	70.0
	59	70.0	70.0	85.0	70.0	70.0	70.0
72	72	70.0	70.0	85.0	70.0	X	70.0
	64	70.0	70.0	85.0	70.0	70.0	70.0
66	66	70.0	70.0	85.0	70.0	70.0	70.0

NOTES:
1. SEE GLAZING DETAILS FOR GLAZING OPTIONS
2. CROSSED OUT BOXES DESIGNATE SIZES NOT ACCEPTABLE FOR THE RESPECTIVE GLASS OPTION.

GENERAL NOTES

1. THESE WINDOW SYSTEMS HAVE BEEN TESTED, ANALYZED AND APPROVED FOR DESIGN PRESSURES NOT TO EXCEED THOSE SHOWN IN THE "ALLOWABLE DESIGN LOADS" TABLE(S).
2. BUCKING, OPENINGS & BUCKING FASTENERS MUST BE PROPERLY DESIGNED & INSTALLED TO TRANSFER WIND LOADS TO THE STRUCTURE.
3. ALL HARDWARE & FASTENERS SHALL BE IN ACCORDANCE WITH THESE DRAWINGS & SHALL NOT VARY UNLESS SPECIFICALLY MENTIONED ON THE DRAWINGS.
4. THE DETAILS & SPECIFICATIONS SHOWN HEREIN REPRESENT THE PRODUCTS TESTED & PROPOSED FOR WATER, AIR, IMPACT, CYCLIC & UNIFORM STATIC AIR PRESSURE TESTING IN CONFORMANCE WITH THE 2004 FLORIDA BUILDING CODE PROTOCOLS TAS-201, 202 & 203 FOR LARGE MISSILE IMPACT WINDOWS.
5. THESE WINDOW SYSTEMS HAVE BEEN DESIGNED IN ACCORDANCE WITH THE 2004 FLORIDA BUILDING CODE (FBC) INCLUDING HIGH VELOCITY HURRICANE ZONES (HVHZ).
6. IMPACT SHUTTERS ARE NOT REQUIRED WITH THESE WINDOWS.
7. ALL ANCHORS SHALL BE INSTALLED AS SPECIFIED ON THESE DRAWINGS. SPECIFIED EMBEDMENT TO BASE MATERIAL SHALL BE BEYOND WALL FINISH OR STUCCO.
8. ALL FRAME ANCHORS SECURING WINDOW/DOOR FRAME TO PRESSURE TREATED BUCKS OR WOOD FRAMING SHALL BE CAPABLE OF RESISTING CORROSION CAUSED BY THE PRESSURE TREATING CHEMICALS IN THE WOOD.
9. MATERIALS, INCLUDING BUT NOT LIMITED TO STEEL SCREWS, THAT COME INTO CONTACT WITH OTHER DISSIMILAR MATERIALS SHALL MEET THE REQUIREMENTS OF 2004 FLORIDA BUILDING CODE SECTION 2003.8.4.
10. DETERMINE THE POSITIVE & NEGATIVE DESIGN LOADS TO USE WHEN REFERENCING THESE DOCUMENTS IN ACCORDANCE WITH THE GOVERNING CODE & GOVERNING WIND VELOCITY. FOR WIND LOAD CALCULATIONS IN ACCORDANCE WITH THE 2004 FLORIDA BUILDING CODE, A DIRECTIONALITY FACTOR OF Kd = 0.85 SHALL BE USED.
11. NO INCREASE IN ALLOWABLE STRESS HAS BEEN USED IN THE DESIGN OF THIS PRODUCT. WIND LOAD DURATION FACTOR Cd = 1.6 WAS USED FOR WOOD SCREW DESIGN.

APPROVED SHAPES

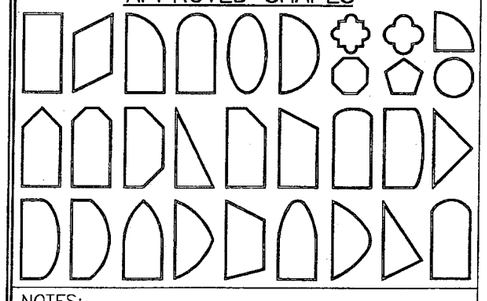

NOTES:
1. OTHER SHAPES MAY APPLY PROVIDING THEY ARE SIMILAR TO THOSE SHOWN & HAVE CORNER CONSTRUCTION AS DESCRIBED ON THIS SHEET.
2. ALL SHAPED UNITS MUST FIT INSCRIBED INTO THE ALLOWABLE RECTANGULAR UNITS & BE GOVERNED BY THE ALLOWABLE PRESSURE OF THE RESPECTIVE RECTANGULAR UNIT.

RECEIVED
2007 AUG 27 PM 2:57
BUILDING CODE COMPLIANCE
ADMINISTRATIVE DIVISION

Approved as complying with the Florida Building Code
Date 12/27/2007
NOA# 07-0829.12
Miami Dade Product Control Division
By

DRAWN BY: W.R.M.	CHECKED BY: W.W.S.
PLOT: 1=16	DATE: 1/24/07

NO.	REVISION DESCRIPTION	BY	DATE

DRAWING TITLE: DIRECT GLAZED FIXED IMPACT WINDOW

MANUFACTURER: TISCHLER UND SOHN (USA) LTD.
SIX SUBURBAN AVENUE
STAMFORD, CONNECTICUT
203-674-0600

CONSULTANTS
W. W. SCHAEFER ENGINEERING & CONSULTING, P.A.
8895 N. MILITARY TRAIL, SUITE C-204
PALM BEACH GARDENS, FL 33410
PHONE: 561-775-4902 FAX: 561-775-4903

CERTIFICATION
AUG 13 2007
WARREN W. SCHAEFER, P.E.
P.E. NO. 44135

DRAWING NO. 1514
REV.
SHEET NO. 1 OF 6

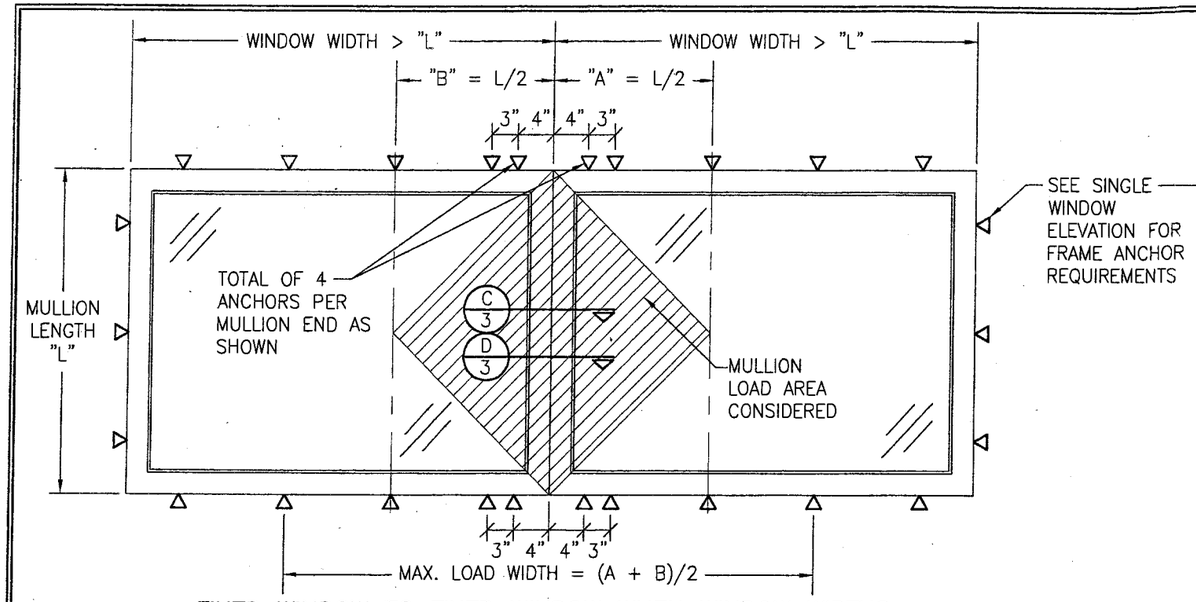

FIXED WINDOW TO FIXED WINDOW WHEN WINDOW WIDTHS ARE GREATER THAN THE MULLION LENGTH (SEE MULLION LOAD TABLE)

SEE SINGLE WINDOW ELEVATION FOR WINDOW DETAIL NOT SHOWN

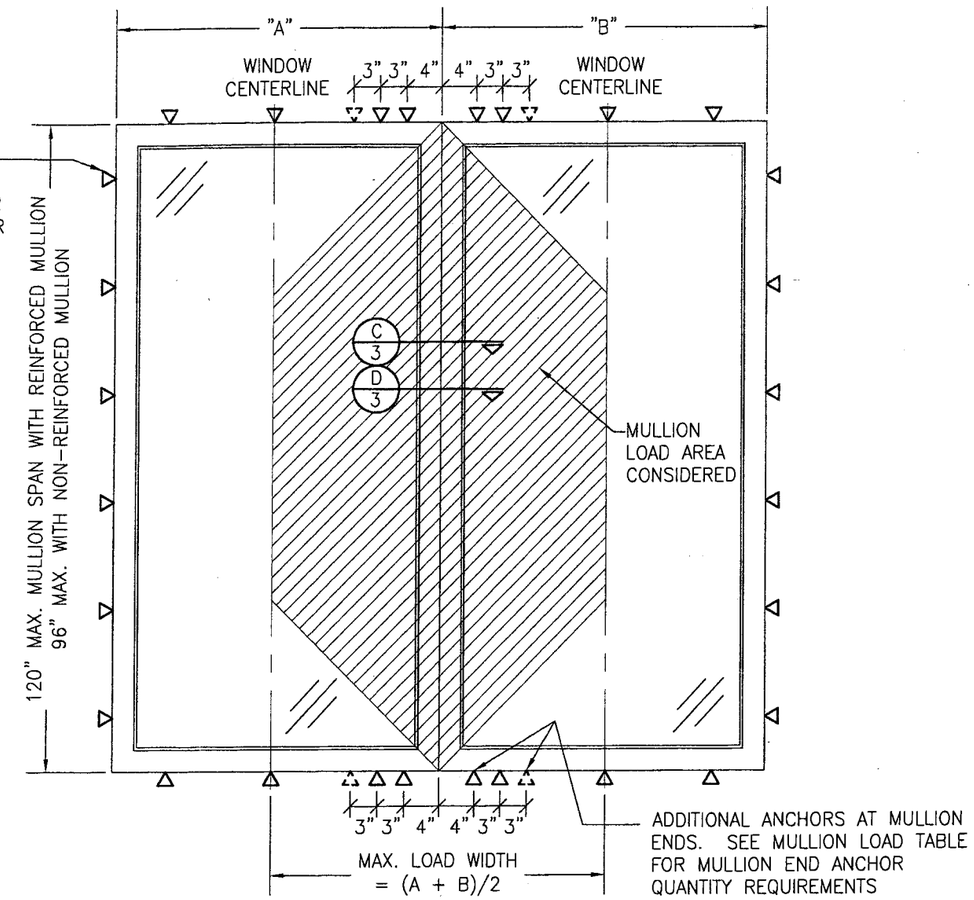

FIXED WINDOW TO FIXED WINDOW WHEN WINDOW WIDTHS ARE LESS THAN OR EQUAL TO THE MULLION LENGTH (SEE MULLION LOAD TABLE)

SCALE: N.T.S.

SEE SINGLE WINDOW ELEVATION FOR WINDOW DETAIL NOT SHOWN

MULLION ALLOWABLE LOAD TABLE

MAXIMUM MULLION SPAN (IN.)	MAXIMUM LOAD WIDTH (IN.)	ALLOWABLE PRESSURE (POS. & NEG. PSF) NON-REINFORCED 4 OR 6 END ANCHORS	REINFORCED 4 END ANCHORS	REINFORCED 6 END ANCHORS
120	72	N/A	40.4	50.0
	66	N/A	42.5	53.5
	60	N/A	45.2	57.9
	54	N/A	48.6	63.3
	48	N/A	53.0	70.0
	42	N/A	58.7	77.6
	36	N/A	66.5	85.0
	30	N/A	77.5	85.0
	24	N/A	85.0	85.0
108	72	N/A	47.1	62.2
	66	N/A	49.3	65.2
	60	N/A	52.2	68.9
	54	N/A	55.8	73.7
	48	N/A	60.6	80.0
	42	N/A	66.8	85.0
	36	N/A	75.4	85.0
	30	N/A	85.0	85.0
96	72	26.3	56.5	74.7
	66	27.7	58.7	77.6
	60	29.4	61.7	81.5
	54	31.9	65.5	85.0
	48	35.1	70.7	85.0
	42	39.3	77.5	85.0
	36	45.0	85.0	85.0
	30	53.1	85.0	85.0
	24	65.4	85.0	85.0
	18	85.0	85.0	85.0

MAXIMUM MULLION SPAN (IN.)	MAXIMUM LOAD WIDTH (IN.)	ALLOWABLE PRESSURE (POS. & NEG. PSF) NON-REINFORCED 4 END ANCHORS	REINFORCED 4 END ANCHORS	REINFORCED 6 END ANCHORS
84	72	37.0	70.7	85.0
	66	38.3	72.6	85.0
	60	40.4	75.4	85.0
	54	43.2	79.3	85.0
	48	47.0	84.8	85.0
	42	52.4	85.0	85.0
	36	59.7	85.0	85.0
	30	70.3	85.0	85.0
	24	85.0	85.0	85.0
72	72	56.9	85.0	85.0
	66	57.6	85.0	85.0
	60	59.3	85.0	85.0
	54	62.4	85.0	85.0
	48	66.9	85.0	85.0
	42	73.4	85.0	85.0
	36	83.3	85.0	85.0
	30	85.0	85.0	85.0
66	66	73.8	85.0	85.0
	60	75.0	85.0	85.0
	54	77.5	85.0	85.0
	48	82.4	85.0	85.0
	42	85.0	85.0	85.0
60	60	85.0	85.0	85.0

LESSER OF THE PRESSURE SHOWN IN THIS TABLE & THAT ALLOWED FOR THE INDIVIDUAL WINDOW SHALL CONTROL AS ALLOWABLE FOR THE OVERALL UNIT.

MULTIPLE UNIT NOTES:

1. ALL WINDOWS ARE RESTRICTED BY THE DIMENSIONS SPECIFIED.
2. THE MAXIMUM ALLOWABLE PRESSURE FOR A COMBINED UNIT IS RESTRICTED BY THE LESSER OF THE INDIVIDUAL WINDOW ALLOWABLE PRESSURE OR THE ALLOWABLE MULLION PRESSURE. SEE LOAD TABLES ON SHEET 1 & 2.
3. WINDOWS MAY BE STACKED HORIZONTAL OR VERTICAL. (IF VERTICALLY STACKED, MANUFACTURER MUST INSURE THAT THE DEAD WEIGHT OF THE WINDOWS DOES NOT CAUSE ANY WINDOW FAILURES OR DEFORMATIONS)
4. NUMBER OF WINDOWS IN ONE OPENING IS NOT RESTRICTED PROVIDING THE OPENING IS DESIGNED TO SUPPORT ALL LOADS TRANSFERRED FROM THE WINDOWS & THEIR MULLIONS.

Complying with the Florida Building Code
Date 12/27/2007
NOA# 07-0829.12
Miami Dade Product Control Division
By

DRAWN BY: W.R.M.	CHECKED BY: W.W.S.
PLOT: 1=16	DATE: 1/24/07

NO.	REVISION DESCRIPTION	BY	DATE

DRAWING TITLE: DIRECT GLAZED FIXED IMPACT WINDOW

MANUFACTURER: TISCHLER UND SOHN (USA) LTD.
SIX SUBURBAN AVENUE
STAMFORD, CONNECTICUT
203-674-0600

CONSULTANTS: W. W. SCHAEFER ENGINEERING & CONSULTING, P.A.
8895 N. MILITARY TRAIL; SUITE C-204
PALM BEACH GARDENS, FL 33410
PHONE: 561-775-4902 FAX: 561-775-4903

CERTIFICATION
AUG 13 2007
WARREN W. SCHAEFER, P.E.
P.E. NO. 44135

DRAWING NO. 1514 REV.

SHEET NO. 2 OF 6

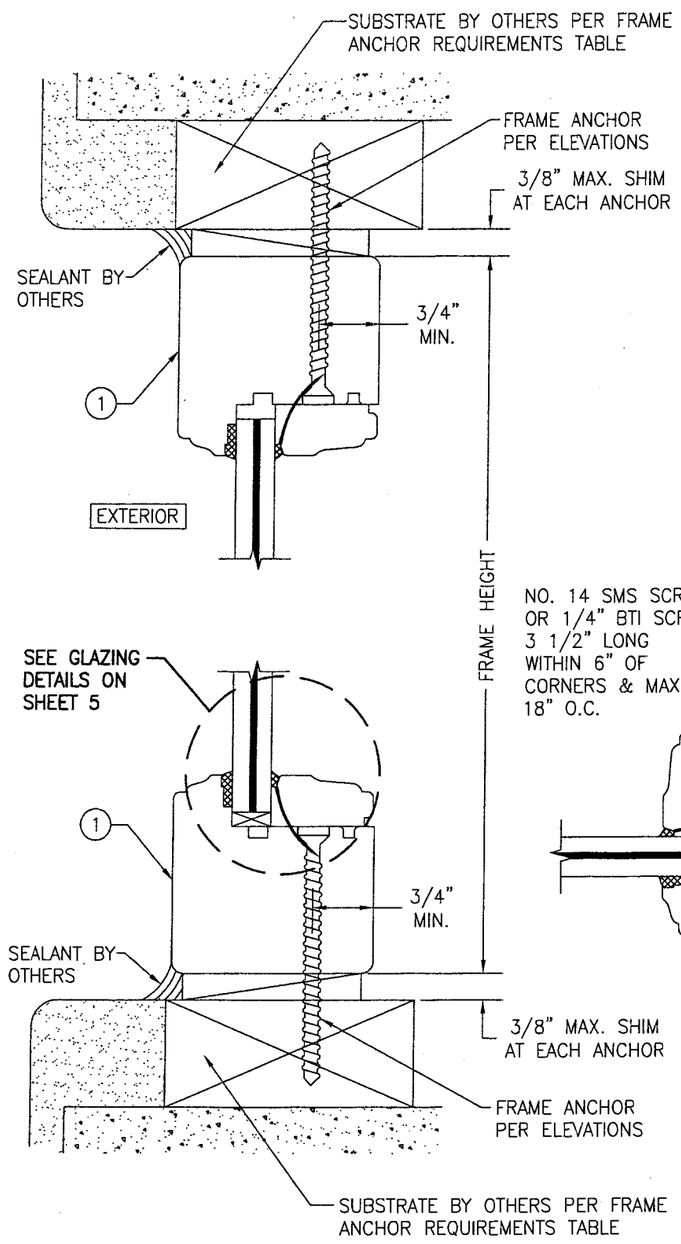

SECTION A/3
SCALE: 1/2 FULL

FRAME SHEAR SCREW INSTALLATION SHOWN. SEE OPTIONAL DETAILS FOR OTHER INSTALLATION CONDITIONS.

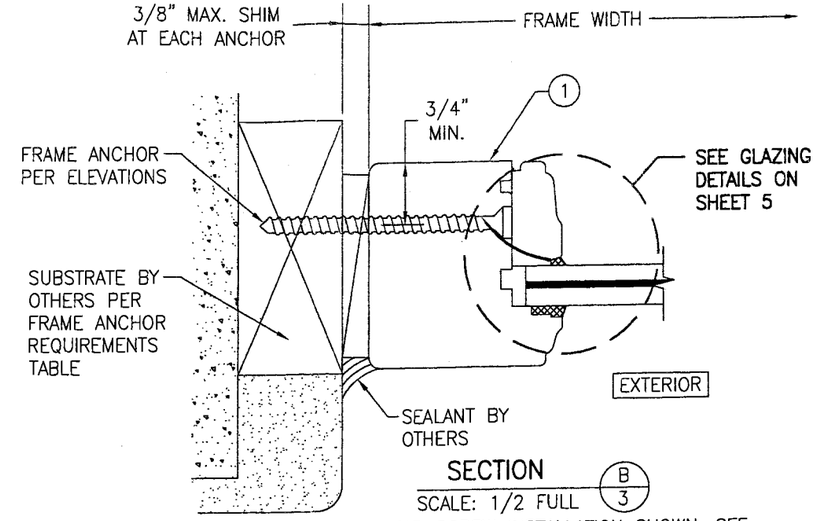

SECTION B/3
SCALE: 1/2 FULL

FRAME SHEAR SCREW INSTALLATION SHOWN. SEE OPTIONAL DETAILS FOR OTHER INSTALLATION CONDITIONS.

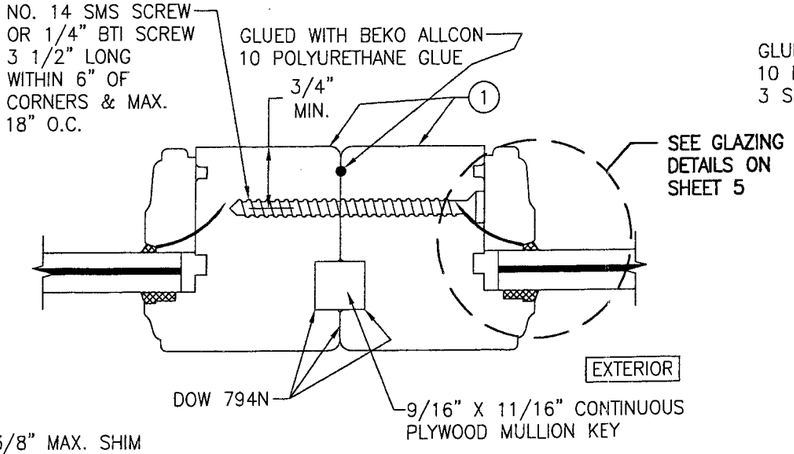

SECTION C/3
SCALE: 1/2 FULL

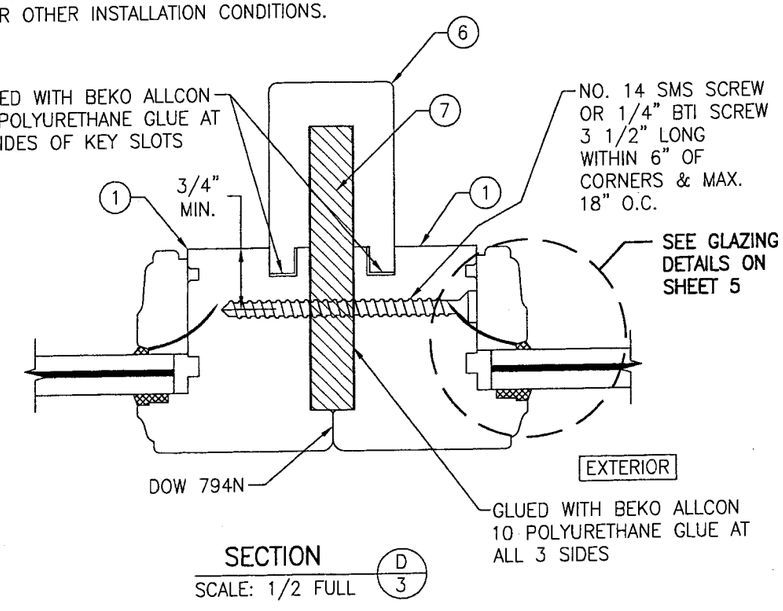

SECTION D/3
SCALE: 1/2 FULL

Approved as complying with the Florida Building Code
Date 12/27/2007
NOA# 07-0829.12
Miami Dade Product Control Division
By

DRAWN BY: W.R.M.	CHECKED BY: W.W.S.
PLOT: 1=2	DATE: 01/24/07

NO.	REVISION DESCRIPTION	BY	DATE

DRAWING TITLE
DIRECT GLAZED FIXED IMPACT WINDOW

MANUFACTURER
TISCHLER UND SOHN (USA) LTD.
SIX SUBURBAN AVENUE
STAMFORD, CONNECTICUT
203-674-0600

CONSULTANTS
W. W. SCHAEFER ENGINEERING & CONSULTING, P.A.
8895 N. MILITARY TRAIL, SUITE C-204
PALM BEACH GARDENS, FL 33410
PHONE: 561-775-4902 FAX: 561-775-4903

CERTIFICATION
AUG 13 2007
WARREN W. SCHAEFER, P.E.
P.E. NO. 44135

DRAWING NO. 1514
REV.
SHEET NO. 3 OF 6

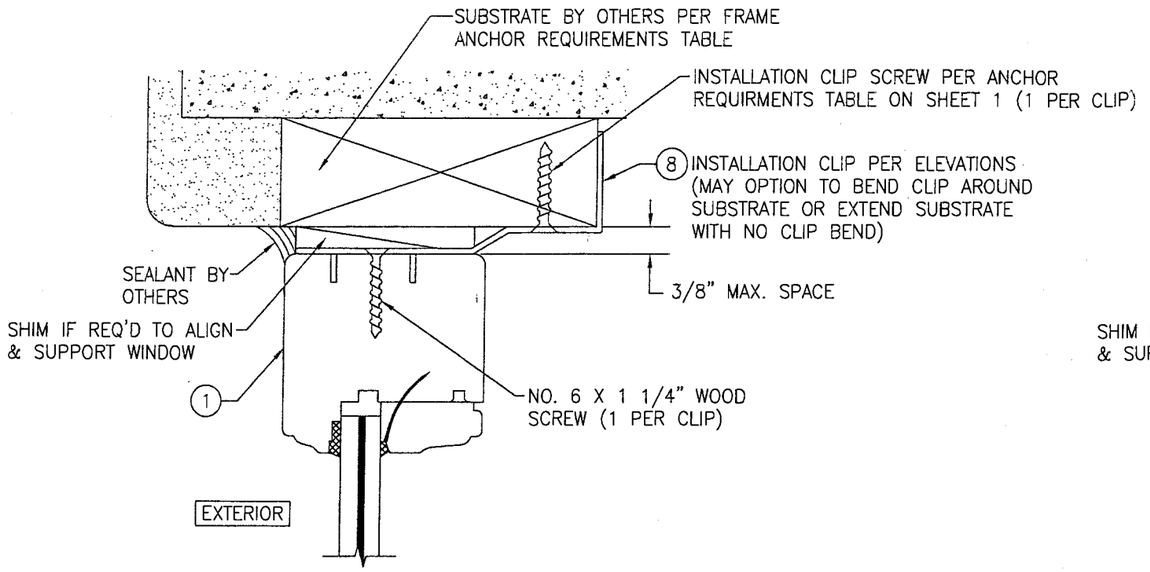

OPTIONAL INSTALLATION CLIP DETAIL

(HEAD SECTION SHOWN, SILL & SIDES ARE INSTALLED THE SAME)
(FOR DETAIL NOT SHOWN, SEE OTHER SECTIONS)

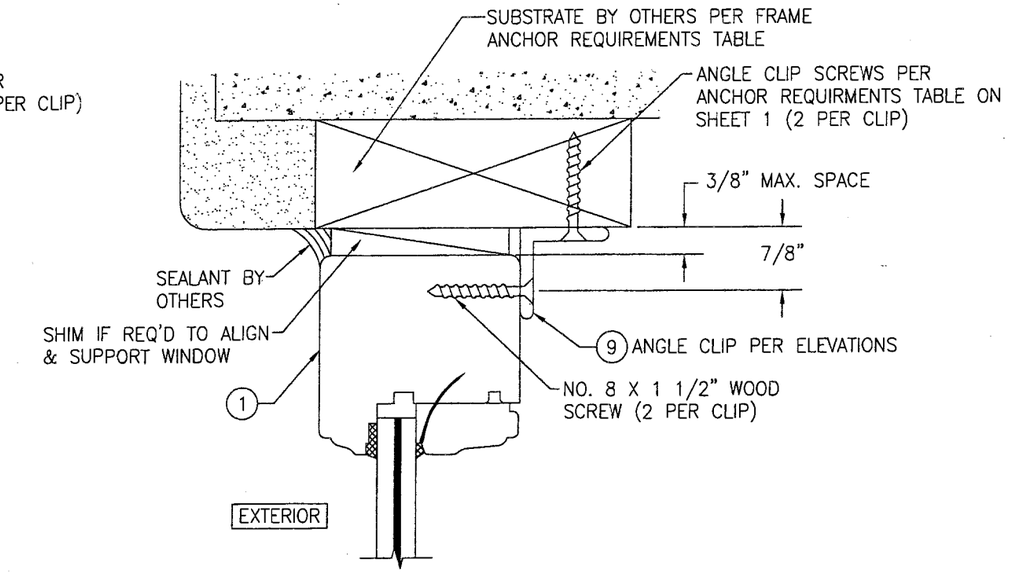

OPTIONAL INSTALLATION ANGLE CLIP DETAIL

(HEAD SECTION SHOWN, SILL & SIDES ARE INSTALLED THE SAME)
(FOR DETAIL NOT SHOWN, SEE OTHER SECTIONS)

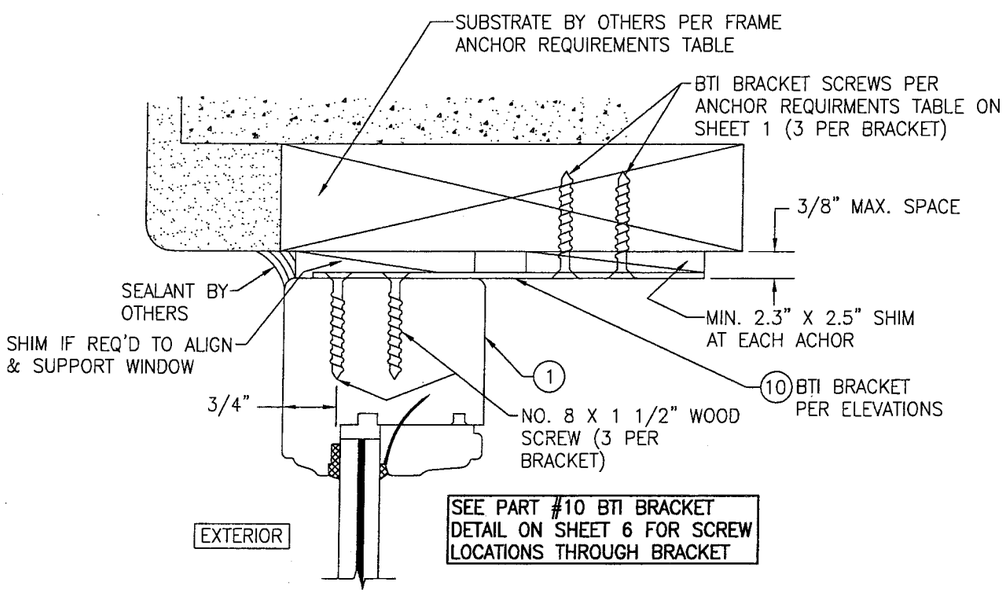

OPTIONAL INSTALLATION BTI BRACKET DETAIL

(HEAD SECTION SHOWN, SILL & SIDES ARE INSTALLED THE SAME)
(FOR DETAIL NOT SHOWN, SEE OTHER SECTIONS)

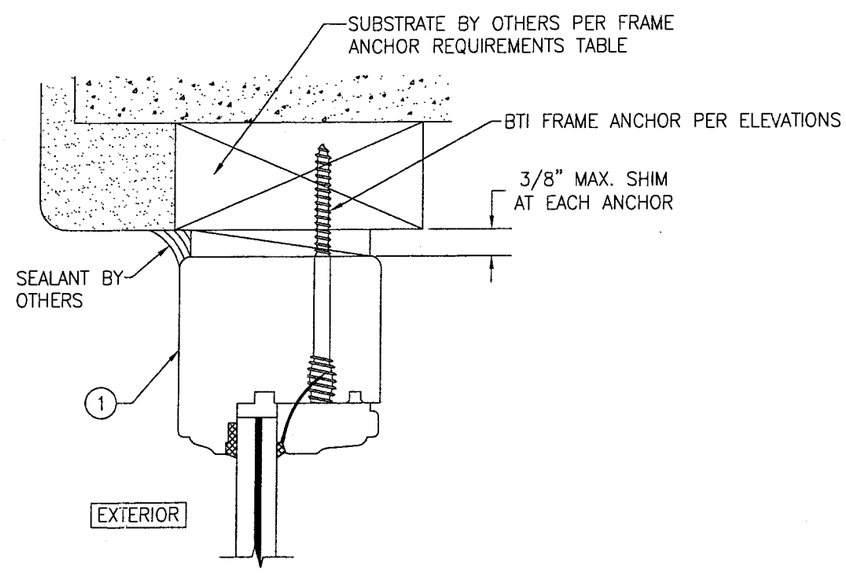

OPTIONAL BTI SCREW DETAIL

(HEAD SECTION SHOWN, SILL & SIDES ARE INSTALLED THE SAME)
(FOR DETAIL NOT SHOWN, SEE OTHER SECTIONS)

Approved as complying with the Florida Building Code
Date 12/18/2007
NOA# 07-0829.12
Miami Dade Product Control Division
By

DRAWN BY: W.R.M.	CHECKED BY: W.W.S.
PLOT: 1=2	DATE: 01/24/07

NO.	REVISION DESCRIPTION	BY	DATE

DRAWING TITLE: DIRECT GLAZED FIXED IMPACT WINDOW

MANUFACTURER: TISCHLER UND SOHN (USA) LTD.
SIX SUBURBAN AVENUE
STAMFORD, CONNECTICUT
203-674-0600

CONSULTANTS
W. W. SCHAEFER ENGINEERING & CONSULTING, P.A.
8895 N. MILITARY TRAIL; SUITE C-204
PALM BEACH GARDENS, FL 33410
PHONE: 561-775-4902 FAX: 561-775-4903

CERTIFICATION
AUG 13 2007
WARREN W. SCHAEFER, P.E.
P.E. NO. 44135

DRAWING NO. 1514 REV.

SHEET NO. 4 OF 6

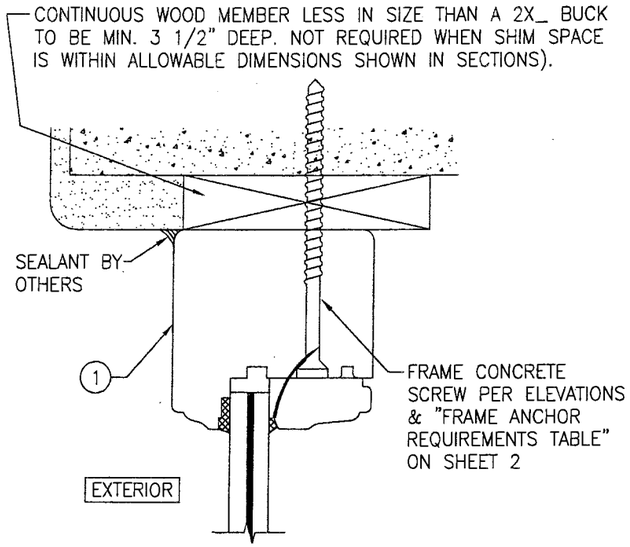

OPTIONAL DIRECT MOUNT DETAIL
TO BLOCK OR CONCRETE WITH SPACER OR SHIM
(HEAD SECTION SHOWN, SILL & SIDES ARE INSTALLED THE SAME)
(FOR DETAIL NOT SHOWN, SEE OTHER SECTIONS)

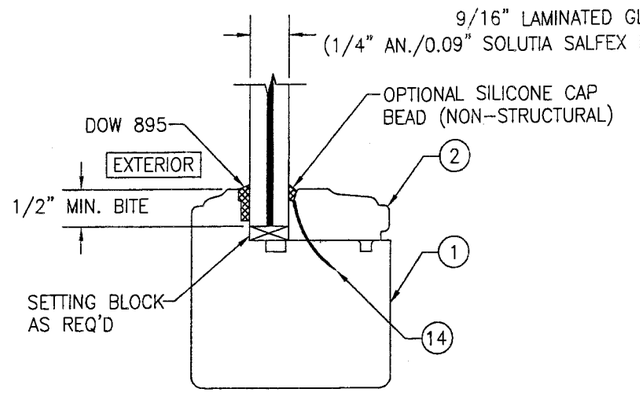

NON-I.G. GLAZING DETAIL
GLASS OPTION 1

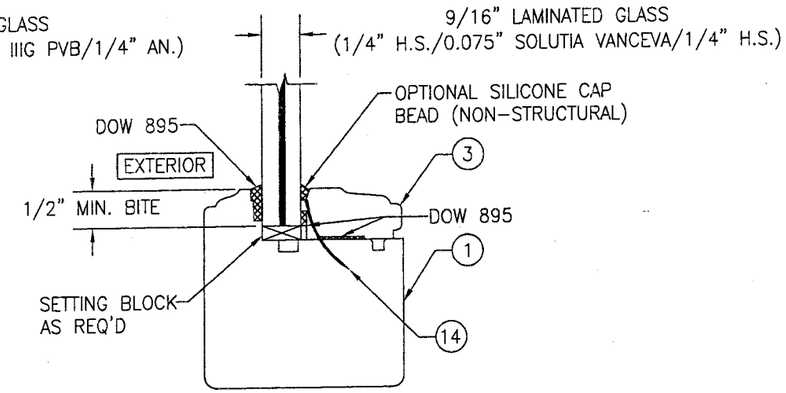

NON-I.G. GLAZING DETAIL
GLASS OPTION 2

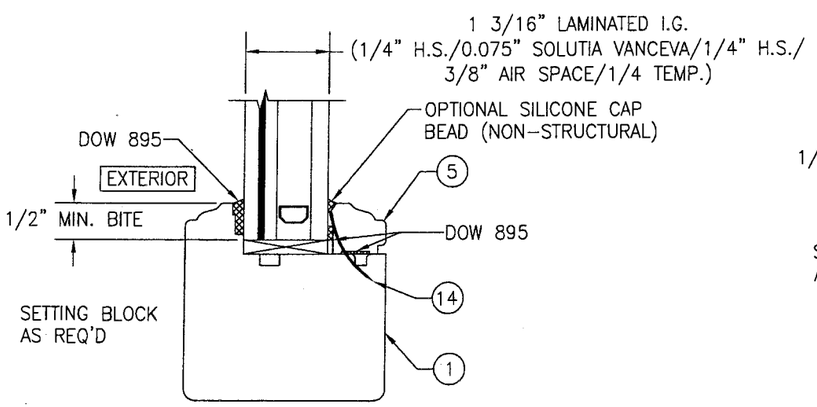

I.G. GLAZING DETAIL
GLASS OPTION 3

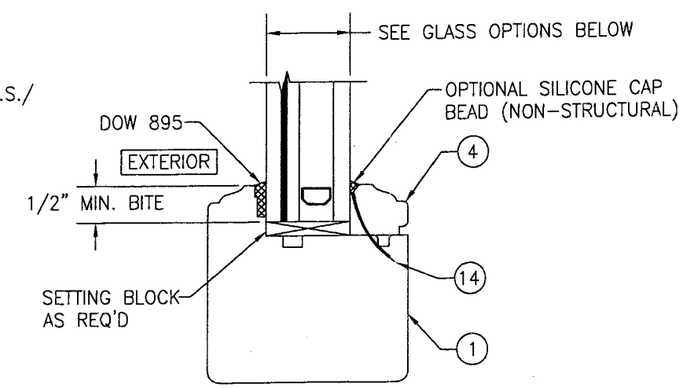

I.G. GLAZING DETAIL
GLASS OPTIONS 4 & 5

GLASS OPTION 4: 1 3/16" LAMINATED I.G. (3/16" AN./0.09" SOLUTIA SALFEX IIIG PVB/3/16" AN./1/2" AIR SPACE/1/4 AN.)

GLASS OPTION 5: 1 3/16" LAMINATED I.G. (3/16" AN./0.09" SOLUTIA SALFEX IIIG PVB/3/16" AN./1/2" AIR SPACE/1/4 TEMP.)

complying with the
Florida Building Code
Date 12/27/2007
NOA# 07-0829.12
Miami Dade Product Control
Division
By

DRAWN BY: W.R.M.	CHECKED BY: W.W.S.
PLOT: 1=2	DATE: 01/24/07

NO.	REVISION DESCRIPTION	BY	DATE

DRAWING TITLE
DIRECT GLAZED FIXED IMPACT WINDOW

MANUFACTURER
TISCHLER UND SOHN (USA) LTD.
SIX SUBURBAN AVENUE
STAMFORD, CONNECTICUT
203-674-0600

CONSULTANTS
W. W. SCHAEFER ENGINEERING & CONSULTING, P.A.
8895 N. MILITARY TRAIL; SUITE C-204
PALM BEACH GARDENS, FL 33410
PHONE: 561-775-4902 FAX: 561-775-4903

CERTIFICATION
AUG 13 2007
WARREN W. SCHAEFER, P.E.
P.E. NO. 44135

DRAWING NO. 1514
REV.
SHEET NO. 5 OF 6

ITEM #	ITEM DESCRIPTION	MANUFACTURER/NOTES
	PARTS	
1	JAMB	MAHOGANY
2	NON-I.G. GLAZING BEAD	MAHOGANY
3	NON-I.G. GLAZING BEAD	MAHOGANY
4	I.G. GLAZING BEAD	MAHOGANY
5	I.G. GLAZING BEAD	MAHOGANY
6	MULLION COVER	MAHOGANY
7	MULLION REINFORCEMENT	34 KSI STAINLESS STEEL
8	INSTALLATION CLIP	GALVANIZED 54 KSI STEEL
9	ANGLE CLIP	6061-T6 ALUMINUM
10	BTI BRACKET	GALVANIZED 54 KSI STEEL
	FASTENERS	
14	OPTIONAL 18 GA. X 1 1/2" S.S. CURVED NAIL	4" FROM CORNERS & 12" MAX. O.C.

NOTE: MAHOGANY USED IN TESTING WAS SIPO MAHOGANY. OTHER WOOD SPECIES APPLICABLE FOR USE WITH THIS PRODUCT ARE MERBAU, DOUSSIE, MERANTI, SAPELLI, HONDURAS & SWIETENIA MAHOGANY, TEAK OR OAK. ALL WOOD IS MINIMUM GRADE 2 MILLED BY TISCHLER UND SOHN TO SELECT.

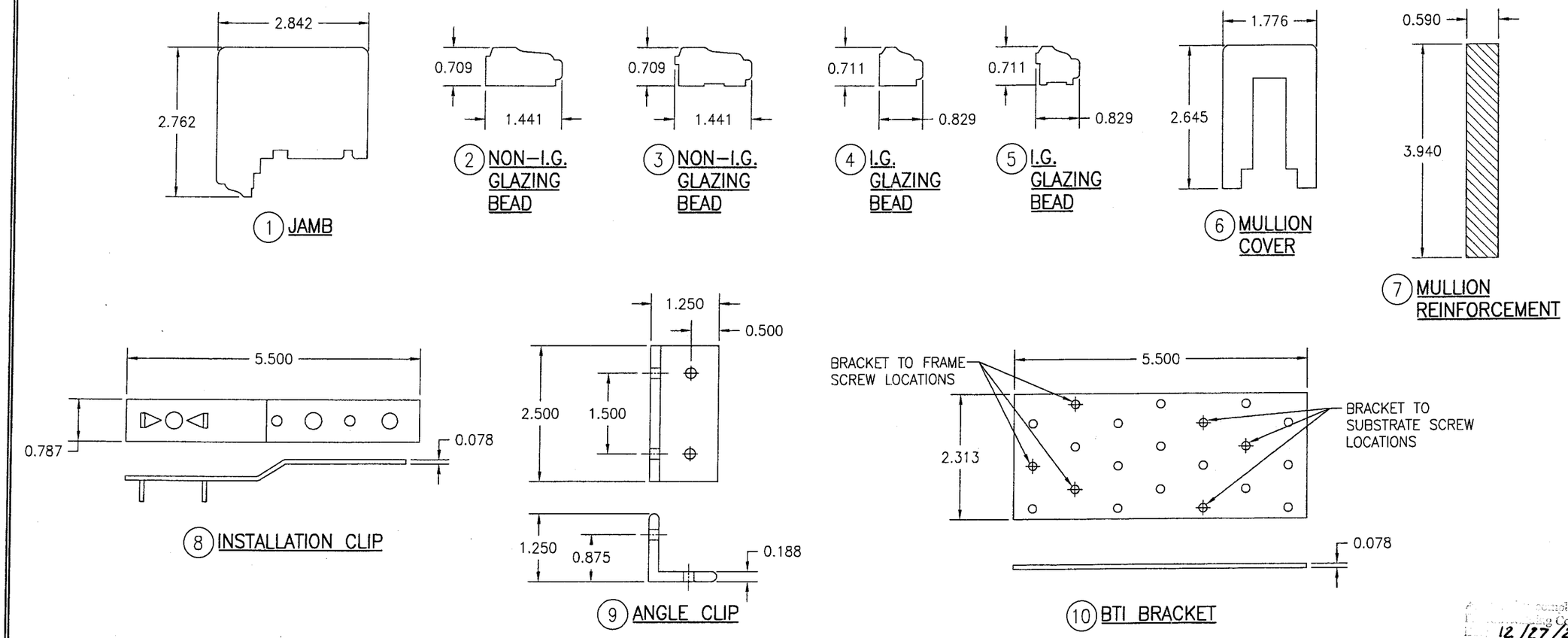

Approved for complying with the Florida Building Code
Date: 12/27/2007
NOA# 07-0829.12
Miami Dade Product Control Division
By

DRAWN BY: W.R.M.	CHECKED BY: W.W.S.
PLOT: 1=2	DATE: 01/24/07

NO.	REVISION DESCRIPTION	BY	DATE

DRAWING TITLE: DIRECT GLAZED FIXED IMPACT WINDOW

MANUFACTURER: TISCHLER UND SOHN (USA) LTD.
SIX SUBURBAN AVENUE
STAMFORD, CONNECTICUT
203-674-0600

CONSULTANTS: W. W. SCHAEFER ENGINEERING & CONSULTING, P.A.
8895 N. MILITARY TRAIL; SUITE C-204
PALM BEACH GARDENS, FL 33410
PHONE: 561-775-4902 FAX: 561-775-4903

CERTIFICATION
AUG 13 2007
WARREN W. SCHAEFER, P.E.
P.E. NO. 44135

DRAWING NO. 1514 | REV.

SHEET NO. 6 OF 6