MIAMI-DADE

BUILDING CODE COMPLIANCE OFFICE (BCCO)
PRODUCT CONTROL DIVISION

MIAMI-DADE COUNTY, FLORIDA
METRO-DADE FLAGLER BUILDING
140 WEST FLAGLER STREET, SUITE 1603
MIAMI, FLORIDA 33130-1563
(305) 375-2901 FAX (305) 375-2908

NOTICE OF ACCEPTANCE (NOA)

Steel Tile Company
3487 Thomas Street
Innisfil, Ontario CANADA
L9S 3W4

SCOPE:

This NOA is being issued under the applicable rules and regulations governing the use of construction materials. The documentation submitted has been reviewed by Miami-Dade County Product Control Division and accepted by the Board of Rules and Appeals (BORA) to be used in Miami Dade County and other areas where allowed by the Authority Having Jurisdiction (AHJ).

This NOA shall not be valid after the expiration date stated below. The Miami-Dade County Product Control Division (In Miami Dade County) and/or the AHJ (in areas other than Miami Dade County) reserve the right to have this product or material tested for quality assurance purposes. If this product or material fails to perform in the accepted manner, the manufacturer will incur the expense of such testing and the AHJ may immediately revoke, modify, or suspend the use of such product or material within their jurisdiction. BORA reserves the right to revoke this acceptance, if it is determined by Miami-Dade County Product Control Division that this product or material fails to meet the requirements of the applicable building code.

This product is approved as described herein, and has been designed to comply with the Florida Building Code, including the High Velocity Hurricane Zone of the Florida Building Code.

DESCRIPTION: Katech Roof Panel

LABELING: Each unit shall bear a permanent label with the manufacturer's name or logo, city, state and following statement: "Miami-Dade County Product Control Approved", unless otherwise noted herein.

RENEWAL of this NOA shall be considered after a renewal application has been filed and there has been no change in the applicable building code negatively affecting the performance of this product.

TERMINATION of this NOA will occur after the expiration date or if there has been a revision or change in the materials, use, and/or manufacture of the product or process. Misuse of this NOA as an endorsement of any product, for sales, advertising or any other purposes shall automatically terminate this NOA. Failure to comply with any section of this NOA shall be cause for termination and removal of NOA.

ADVERTISEMENT: The NOA number preceded by the words Miami-Dade County, Florida, and followed by the expiration date may be displayed in advertising literature. If any portion of the NOA is displayed, then it shall be done in its entirety.

INSPECTION: A copy of this entire NOA shall be provided to the user by the manufacturer or its distributors and shall be available for inspection at the job site at the request of the Building Official.

This new NOA consists of pages 1 through 6.
The submitted documentation was reviewed by Alex Tigera.

ROOFING SYSTEM APPROVAL:

Category:	Roofing
Sub-Category:	Metal, Panels (Non-Structural)
Material:	Steel
Deck Type:	Wood
Maximum Design Pressure	-159.25 psf

TRADE NAMES OF PRODUCTS MANUFACTURED OR LABELED BY APPLICANT:

Product	Dimensions	Test Specifications	Product Description
Katech Roof Panel	39.5" x 16" Thickness min. 0.0179"	TAS 110	Preformed, Galvalume Metal Panel.

EVIDENCE SUBMITTED:

Test Agency	Test Identifier	Test Name/Report	Date
Hurricane Test Laboratory, Inc.	0465-0202-07	TAS 125	04/04/07
PRI Construction Materials	STCO-005-02-01	TAS 100	12/05/07
Duracoat Test Report	Accelerated Testing	ASTM G-154	06/26/07
Duracoat Test Report	Salt Spray Testing	ASTM B-117	06/26/07

APPROVED ASSEMBLIES:

SYSTEM A:	Katech Roof Panel
Deck Type:	Wood, Non-insulated
Deck Description:	New construction or Re-roof, 15/32" or greater plywood or wood plank
Slope Range:	2":12" or greater
Maximum Uplift Pressure:	**See Table A Below**

Deck Attachment: Deck shall be attached in accordance with applicable Building Code, but in no case shall it be less than 8d ring shank nails spaced 6" o.c. In reroofing, where the deck is less than $^{19}/_{32}$" thick (Minimum $^{15}/_{32}$") the above attachment method must be in addition to existing attachment.

Underlayment: Minimum underlayment shall be an ASTM D 226 Type II installed with a minimum 4" side-lap and 6" end-laps. Underlayment shall be fastened with corrosion resistant tin-caps and 12 gauge 1 ¼" annular ring-shank nails, spaced 6" o.c. at all laps and two staggered rows 12" o.c. in the field of the roll. Or, any approved underlayment having a current NOA.

Fire Barrier Board: Any approved fire barrier having a current NOA. Or for class A or B fire rating, install minimum ¼" thick Georgia Pacific "Dens Deck" (with current NOA) or minimum 4mm thick of Tritex, RockRoof (with current NOA) or $^{5}/_{8}$" water resistant type X gypsum sheathing with treated core and facer.

Valleys: Valley construction shall be in compliance with Roofing Application Standard RAS 133 and with Steel Tile Company's current published installation instructions.

Metal Panels and Accessories:

Install the "Katola Roof Panel" and accessories in compliance with Steel Tile Company's current, published installation instructions and details. Flashings, penetrations, valley construction and other details shall be constructed in compliance with the minimum requirements provided in Roofing Application Standard RAS 133.

Panels shall be fastened with corrosion resistant #10 x 3" long HH wood screws with sealing washers of sufficient length to penetrate through the sheathing a minimum of $^{3}/_{16}$". See **Table A** below for minimum fasteners and spacing. Fasteners listed below are to be placed on the front of the panel (exposed) 2" from the bottom edge. The next panel above will overlap the lower panel and the fasteners will penetrate both panels. **(See detail drawings herein).**

All edges that are cut shall be fastened with #10 x 3" long HH wood screws with sealing washers of sufficient length to penetrate through the sheathing a minimum of 3/16" at a maximum of 16" o.c. All openings are filled with Cobra Vent.

TABLE A
MAXIMUM DESIGN PRESSURES

	Field	**Perimeter and Corner[1]**
Maximum Design Pressure	-95.5 psf.	-159.25 psf.
Maximum Fastener Spacing	5 fasteners per panel @ 9-7/8"o.c. *(One at every arch.)*	9 fasteners per panel @ 4-15/16"o.c. *(One at every arch and every valley)*

1. Extrapolation shall not be allowed

SYSTEM LIMITATIONS

1. The maximum designed pressure listed herein shall be applicable to all roof pressure zones (i.e. field, perimeters, and corners). Neither rational analysis, nor extrapolation shall be permitted for enhanced fastening at enhanced pressure zones (i.e. perimeters, extended corners and corners).

2. Fire Classification is not part of this acceptance; Refer to an Approved Roofing Materials Fire Directory for fire ratings for this product.

3. All panels shall be permanently labeled with the manufacturer's name and/or logo, and the following statement: "Miami-Dade County Product Control Approved."

4. All products listed herein shall have a quality assurance audit in accordance with the Florida Building Code and Rule 9B-72 of the Florida Administrative Code.

DETAIL DRAWING:

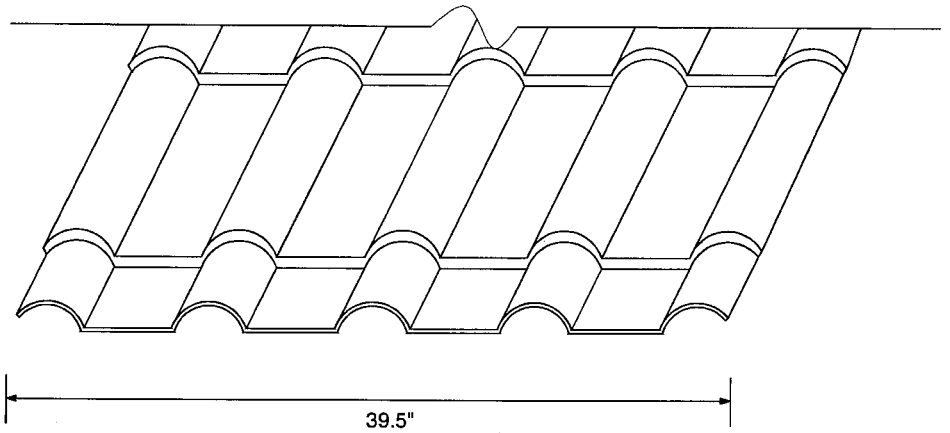

KATECH PANEL

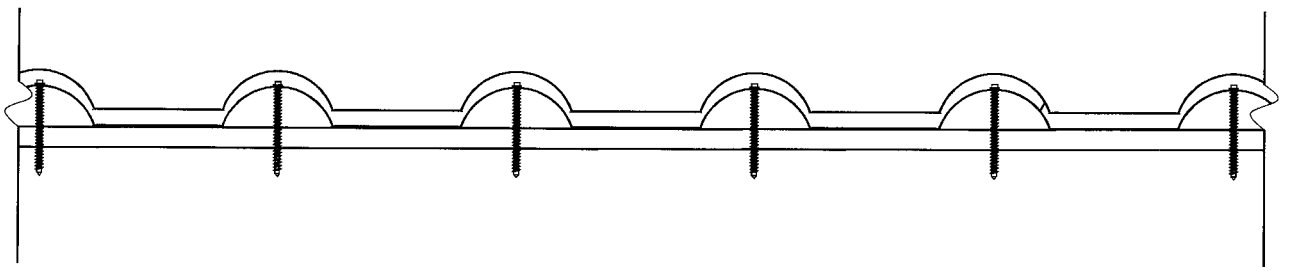

FIELD CONDITION FASTENING PATTERN

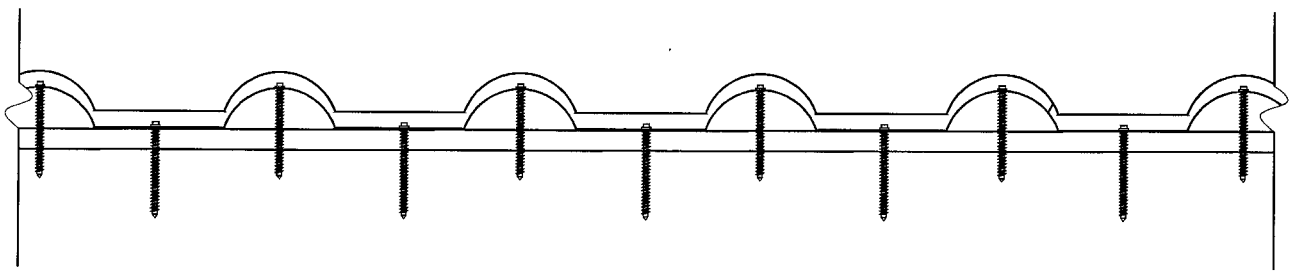

CORNER CONDITION FASTENING PATTERN

END OF THIS ACCEPTANCE