MIAMI-DADE COUNTY
BUILDING CODE COMPLIANCE OFFICE (BCCO)
PRODUCT CONTROL DIVISION

**MIAMI-DADE** COUNTY, FLORIDA
METRO-DADE FLAGLER BUILDING
**140 WEST FLAGLER STREET, SUITE 1603**
MIAMI, FLORIDA 33130-1563
(305) 375-2901 FAX (305) 372-6339
**www.miamidade.gov/buildingcode**

# NOTICE OF ACCEPTANCE (NOA)

**PGT Industries**
**1070 Technology Drive**
**Nokomis, FL 34275**

**SCOPE:**

This NOA is being issued under the applicable rules and regulations governing the use of construction materials. The documentation submitted has been reviewed by Miami-Dade County Product Control Division and accepted by the Board of Rules and Appeals (BORA) to be used in Miami Dade County and other areas where allowed by the Authority Having Jurisdiction (AHJ).

This NOA shall not be valid after the expiration date stated below. The Miami-Dade County Product Control Division (In Miami Dade County) and/or the AHJ (in areas other than Miami Dade County) reserve the right to have this product or material tested for quality assurance purposes. If this product or material fails to perform in the accepted manner, the manufacturer will incur the expense of such testing and the AHJ may immediately revoke, modify, or suspend the use of such product or material within their jurisdiction. BORA reserves the right to revoke this acceptance, if it is determined by Miami-Dade County Product Control Division that this product or material fails to meet the requirements of the applicable building code.

This product is approved as described herein, and has been designed to comply with the Florida Building Code, including the High Velocity Hurricane Zone.

**DESCRIPTION: Series "SGD-3030" Aluminum Sliding Glass Door – S.M.I.**

**APPROVAL DOCUMENT:** Drawing No. **3030-SM-165**, titled "Alum. SGD Series 3030, (Small Missile)", sheets 1 through 18 of 18, dated 08/01/07 with revision B dated 11/20/07, prepared by PGT Industries, signed and sealed by Robert L. Clark, P.E., bearing the Miami-Dade County Product Control Approval stamp with the Notice of Acceptance number and Approval date by the Miami-Dade County Product Control Division.

**MISSILE IMPACT RATING: Small Missile Impact Resistant**

**LABELING:** Each unit shall bear a permanent label with the manufacturer's name or logo, city, state and following statement: "Miami-Dade County Product Control Approved", unless otherwise noted herein.

**RENEWAL** of this NOA shall be considered after a renewal application has been filed and there has been no change in the applicable building code negatively affecting the performance of this product.

**TERMINATION** of this NOA will occur after the expiration date or if there has been a revision or change in the materials, use, and/or manufacture of the product or process. Misuse of this NOA as an endorsement of any product, for sales, advertising or any other purposes shall automatically terminate this NOA. Failure to comply with any section of this NOA shall be cause for termination and removal of NOA.

**ADVERTISEMENT:** The NOA number preceded by the words Miami-Dade County, Florida, and followed by the expiration date may be displayed in advertising literature. If any portion of the NOA is displayed, then it shall be done in its entirety.

**INSPECTION:** A copy of this entire NOA shall be provided to the user by the manufacturer or its distributors and shall be available for inspection at the job site at the request of the Building Official.

This NOA consists of this page 1 and evidence pages E-1 and E-2, as well as approval document mentioned above.

The submitted documentation was reviewed by **Manuel Perez, P.E.**

MIAMI-DADE COUNTY APPROVED

**NOA No. 07-0905.04**
**Expiration Date: February 14, 2013**
**Approval Date: February 14, 2008**

**PGT Industries**

## NOTICE OF ACCEPTANCE: EVIDENCE SUBMITTED

### A. DRAWINGS

1. Manufacturer's die drawings and sections.
2. Drawing No **3030-SM-165**, titled "Alum. SGD Series 3030, (Small Missile)", sheets 1 through 18 of 18, dated 08/01/07 with revision B dated 11/20/07, prepared by PGT Industries, signed and sealed by Robert L. Clark, P.E.

### B. TESTS

1. Test reports on: 1) Air Infiltration Test, per FBC, TAS 202-94
   2) Uniform Static Air Pressure Test, Loading per FBC TAS 202-94
   3) Water Resistance Test, per FBC, TAS 202-94
   4) Small Missile Impact Test per FBC, TAS 201-94
   5) Cyclic Wind Pressure Loading per FBC, TAS 203-94
   6) Forced Entry Test, per FBC 2411 3.2.1, TAS 202-94

   Along with marked-up drawings and installation diagram of Aluminum SGD, prepared by Architectural Testing, Inc., Test Report No. **ATI 72138.01-401-18 R 1**, dated 08/20/07, revision "1" dated 11/15/07, signed and sealed by Joseph A. Reed, P.E.
2. Test reports on: 1) Air Infiltration Test, per FBC, TAS 202-94
   2) Uniform Static Air Pressure Test, Loading per FBC TAS 202-94
   3) Water Resistance Test, per FBC, TAS 202-94
   4) Small Missile Impact Test per FBC, TAS 201-94
   5) Cyclic Wind Pressure Loading per FBC, TAS 203-94
   6) Forced Entry Test, per FBC 2411 3.2.1, TAS 202-94

   Along with marked-up drawings and installation diagram of Aluminum SGD, prepared by Architectural Testing, Inc., Test Report No. **ATI 72138.01-401-18**, dated 08/20/07, signed and sealed by Joseph A. Reed, P.E.

### C. CALCULATIONS

1. Anchor verification calculations and structural analysis, complying with FBC-2004, prepared by PGT Industries, dated 08/30/07, signed and sealed by Robert L. Clark, P.E.

   **Complies with ASTM E1300-02**

### D. QUALITY ASSURANCE

1. Miami Dade Building Code Compliance Office (BCCO).

Manuel Perez

**Manuel Perez, P.E.**
**Product Control Examiner**
**NOA No. 07-0905.04**
**Expiration Date: February 14, 2013**
**Approval Date: February 14, 2008**

## NOTICE OF ACCEPTANCE: EVIDENCE SUBMITTED

### E. MATERIAL CERTIFICATIONS

1. Notice of Acceptance No. **07-1116.04** issued to E.I. DuPont DeNemours Nemours & CO., Inc. for "**DuPont Sentry Glass Plus**" dated January 03, 2008, expiring on January 14, 2012.

### F. STATEMENTS

1. Statement letter of conformance, dated 08/23/07, signed and sealed by Robert L. Clark, P.E.
2. Statement letter of no financial interest, dated 08/23/07, signed and sealed by Robert L. Clark, P.E.
3. Laboratory compliance letter for Test Report no. **ATI 72138.01-401-18**, issued by Architectural Testing, Inc., dated 08/20/07, signed and sealed by Joseph A. Reed, P.E.

### G. OTHER

1. None

**Manuel Perez, P.E.**
**Product Control Examiner**
**NOA No. 07-0905.04**
**Expiration Date: February 14, 2013**
**Approval Date: February 14, 2008**

# GENERAL NOTES: SMALL MISSILE IMPACT SLIDING GLASS DOOR

1. GLAZING OPTIONS: 9/16" LAMINATED GLASS CONSISTING OF (2) LITES OF 1/4" HEAT STRENGTHENED GLASS WITH AN .090 SGP (DUPONT SENTRYGLAS PLUS) INTERLAYER.

2. CONFIGURATIONS: OX, XO, OXO, OXXO

3. DESIGN PRESSURES: SEE TABLE
A. NEGATIVE DESIGN LOADS BASED ON TESTED PRESSURE AND GLASS TABLES ASTM E 1300-02.
B. POSITIVE DESIGN LOADS BASED ON TESTED PRESSURE, WATER TEST PRESSURE AND GLASS TABLES ASTM E 1300-02.

4. ANCHORAGE: THE 33 1/3% STRESS INCREASE HAS NOT BEEN USED IN THE DESIGN OF THIS PRODUCT. MATERIALS, INCLUDING BUT NOT LIMITED TO STEEL SCREWS, THAT COME INTO CONTACT WITH OTHER DISSIMILAR MATERIALS SHALL MEET THE REQUIREMENTS OF THE FLORIDA BUILDING CODE, 2004. FOR ANCHORAGE DETAILS SEE SHEETS 12-15.

5. SHUTTER REQUIREMENT: ABOVE 30 FT., SHUTTERS ARE NOT REQUIRED.

6. INSTALLATION SCREWS, FRAME AND PANEL CORNERS TO BE SEALED.

7. REFERENCES: TEST REPORTS, (ATI) 72138.01-401-18; ELCO TEXTRON NOA: 04-0721.01, 03-0225.05; ANSI/AF&PA NDS-2001 FOR WOOD CONSTRUCTION; ADM-2005 ALUMINUM DESIGN MANUAL

8. THIS PRODUCT HAS BEEN DESIGNED & TESTED TO COMPLY WITH THE REQUIREMENTS OF THE FLORIDA BUILDING CODE, 2004, INCLUDING THE HIGH VELOCITY HURRICANE ZONE (HVHZ).

9. THE MINIMUM WIDTH FOR THE OPERABLE DOOR OF "MEANS OF EGRESS DOORS" MUST COMPLY WITH THE FLORIDA BUILDING CODE, 2004.

10. FOR CONCRETE OR CONCRETE BLOCK APPLICATIONS IN MIAMI-DADE COUNTY, USE ONLY MIAMI-DADE COUNTY APPROVED 5/16" ELCO TAPCONS. MINIMUM DISTANCE FROM ANCHOR TO CONCRETE EDGE IS 1-9/16". ANCHORS SHOULD NOT BE INSTALLED WITHIN 2.5" OF EACH OTHER. FOR WOOD APPLICATIONS IN MIAMI-DADE COUNTY, USE #14 WOOD SCREWS. SCREW THREADS MUST BE COMPLETELY EMBEDDED INTO SUBSTRATE.

11. QUALIFIED CONFIGURATIONS: REV B

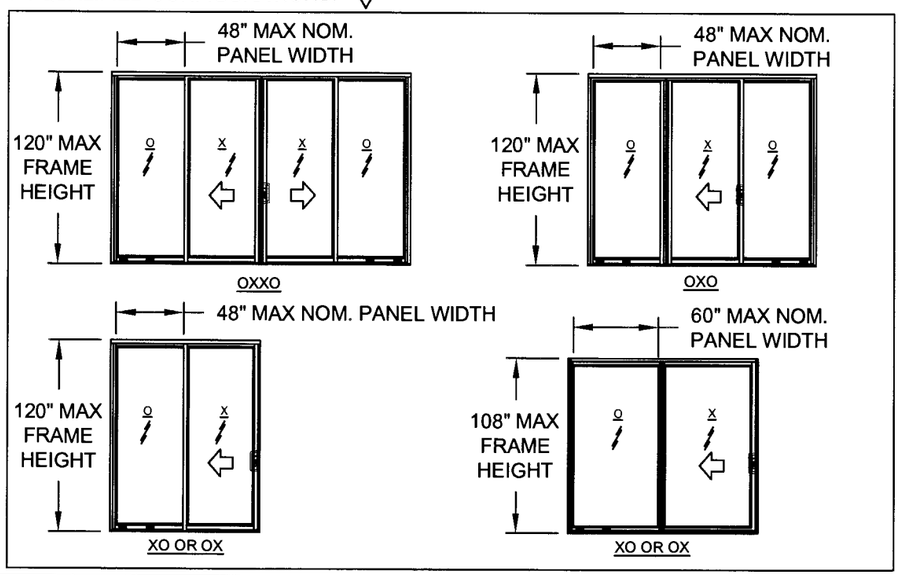


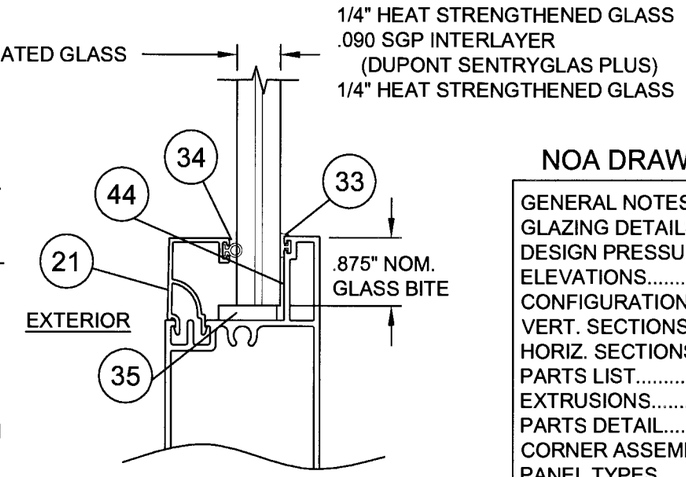


GLAZING DETAIL

## NOA DRAWING MAP


| | |
|---|---|
| GENERAL NOTES | 1 |
| GLAZING DETAILS | 1 |
| DESIGN PRESSURES | 1 |
| ELEVATIONS | 2-3 |
| CONFIGURATIONS | 4 |
| VERT. SECTIONS | 5 |
| HORIZ. SECTIONS | 6 |
| PARTS LIST | 7 |
| EXTRUSIONS | 8-9 |
| PARTS DETAIL | 10-11 |
| CORNER ASSEMBLY | 12 |
| PANEL TYPES | 12 |
| ANCHORAGE | 13-15 |
| DP TABLES | 16-18 |


**DESIGN PRESSURES**
(ALL SIZES & CONFIGURATIONS)

| GLASS TYPE | POS | NEG |
|---|---|---|
| 9/16" HEAT STRENGTHENED LAMI | +165.0 | -165.0 |

BASED ON 5/16" MASONRY ANCHORS IN CONCRETE USING ANCHOR PLATE AND 1/4" SHIMS. OTHER ANCHOR TYPES AND SUBSTRATES AVAILABLE, SOME WITH DESIGN PRESSURE LIMITATIONS. SEE ENCLOSED SHEETS FOR SPECIFICS.

Approved as complying with the Florida Building Code
Date 02/14/2008
NOA# 07-0905.04
Miami Dade Product Control Division
By Manuel Perez

| Revsd By: | Date: | Revisions: | |
|---|---|---|---|
| J.R. | 11/05/07 | A | A. Changed notes, added configs |
| J.R. | 11/20/07 | B | B. Removed OXXO and OXO for 5 x 9 |
| | | | |
| Drawn By: J.R. | Date: 8/01/07 | Checked By: | Date: |


1070 TECHNOLOGY DRIVE
NOKOMIS, FL 34275

P.O. BOX 1529
NOKOMIS, FL 34274


PGT Visibly Better

Description: GENERAL NOTES, GLAZING DETAILS, DP

Title: ALUM. SGD SERIES 3030, (SMALL MISSILE)

| Series/Model: | Scale: | Sheet: | Drawing No. | Rev: |
|---|---|---|---|---|
| SGD3030 | NTS | 1 of 18 | 3030-SM-165 | B |

11/20/07

Robert L. Clark, P.E.
PE #39712
Structural

## SAMPLE SPACING WITHOUT USING THE ANCHOR PLATE

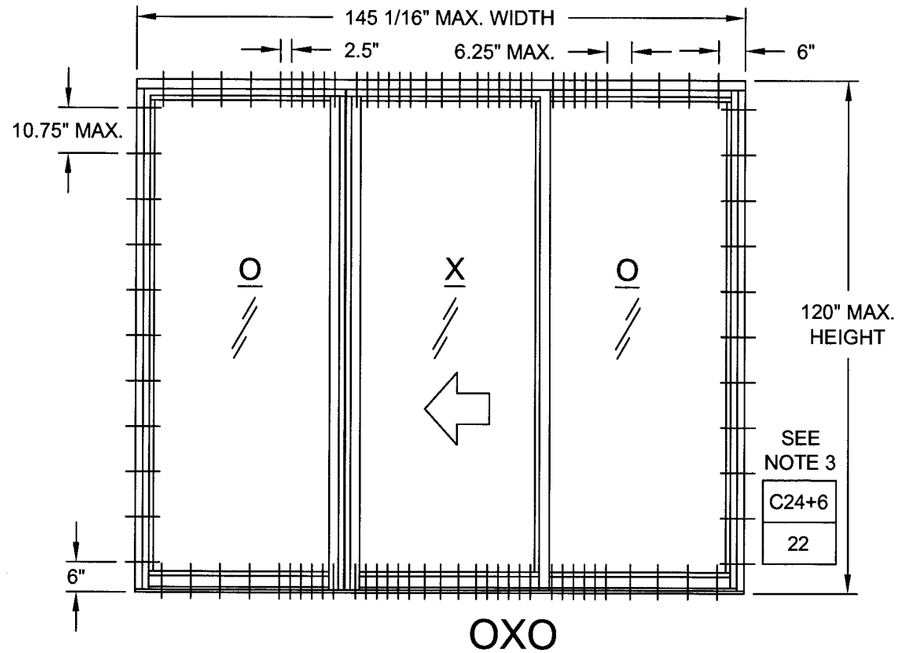


OXO

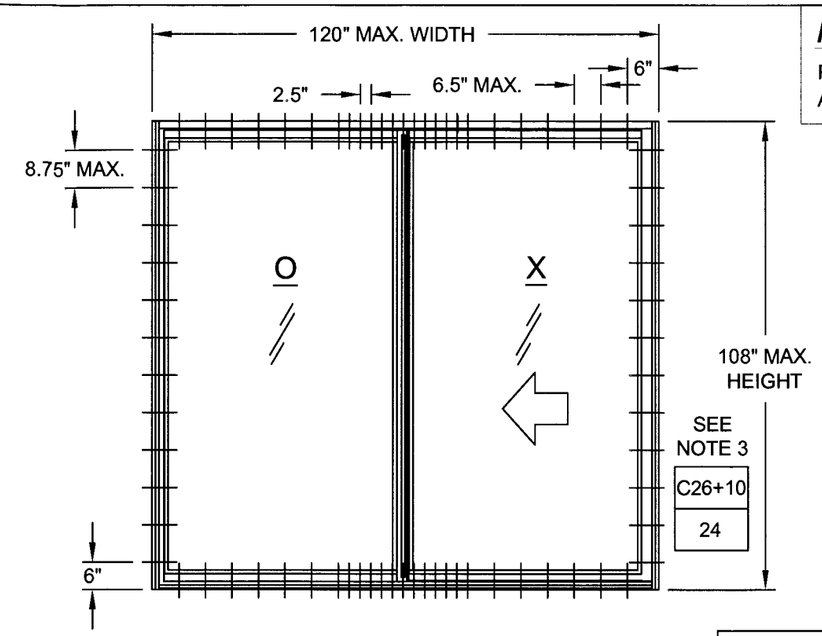


XO OR OX

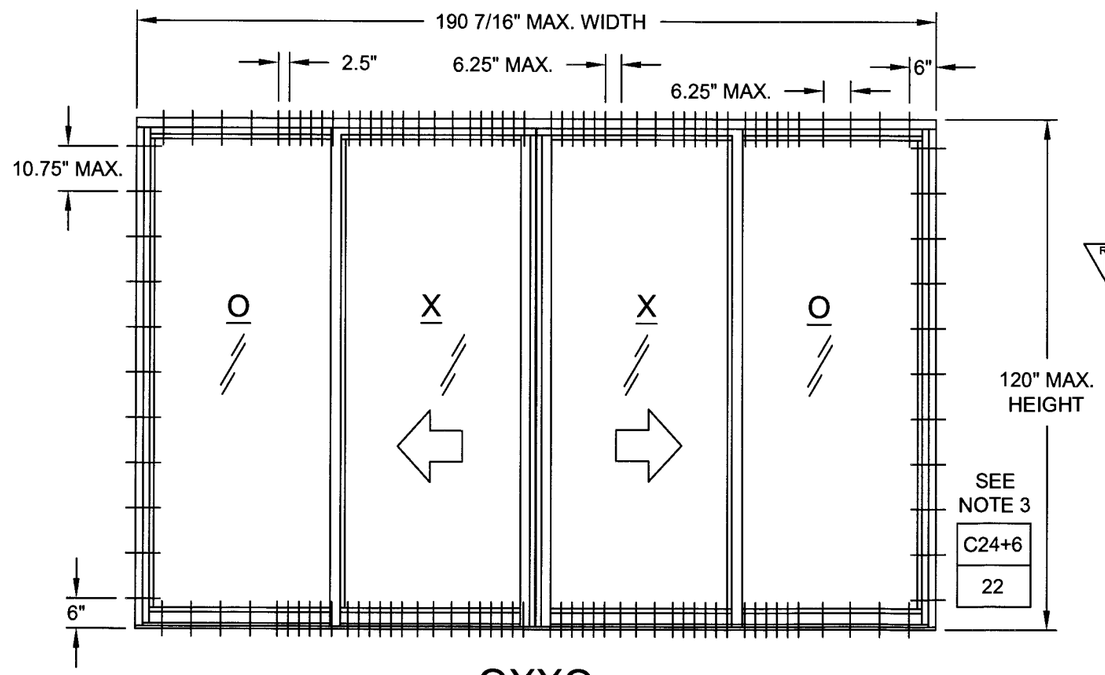


OXXO

**NOTE:**
FOR SMALL MISSILE APPLICATIONS ONLY

NOTES:
1. ABOVE ARE A REPRESENTATIVE OF THE LARGEST SIZES.

2. DESIGN PRESSURE FOR THESE EXAMPLES IS 165 PSF, SEE SHEET 16.

3. FOR TABLE KEY, SEE SHEET 16.

REV B 4. INSTALLATION ELEVATIONS ON THIS PAGE ARE FOR A DESIGN PRESSURE OF +/- 165.0 PSF.

Approved as complying with the Florida Building Code
Date 02/14/2008
NOA# 07-0905.04
Miami Dade Product Control Division
By Manuel Perez

11/20/07

Robert L. Clark, P.E.
PE #39712
Structural

| Revsd By: | Date: | Revisions: | |
|---|---|---|---|
| J.R. | 11/05/07 | A | A. Added entire page |
| J.R. | 11/20/07 | B | B. Added Note 4 |
| Revsd By: | Date: | Revisions: | |
| Drawn By: J.R. | Date: 8/01/07 | Checked By: | Date: |

1070 TECHNOLOGY DRIVE
NOKOMIS, FL 34275

P.O. BOX 1529
NOKOMIS, FL 34274

PGT Visibly Better

Description: ANCHOR ELEVATIONS

Title: ALUM. SGD SERIES 3030, (SMALL MISSILE)

| Series/Model: | Scale: | Sheet: | Drawing No. | Rev: |
|---|---|---|---|---|
| SGD3030 | NTS | 2 of 18 | 3030-SM-165 | B |

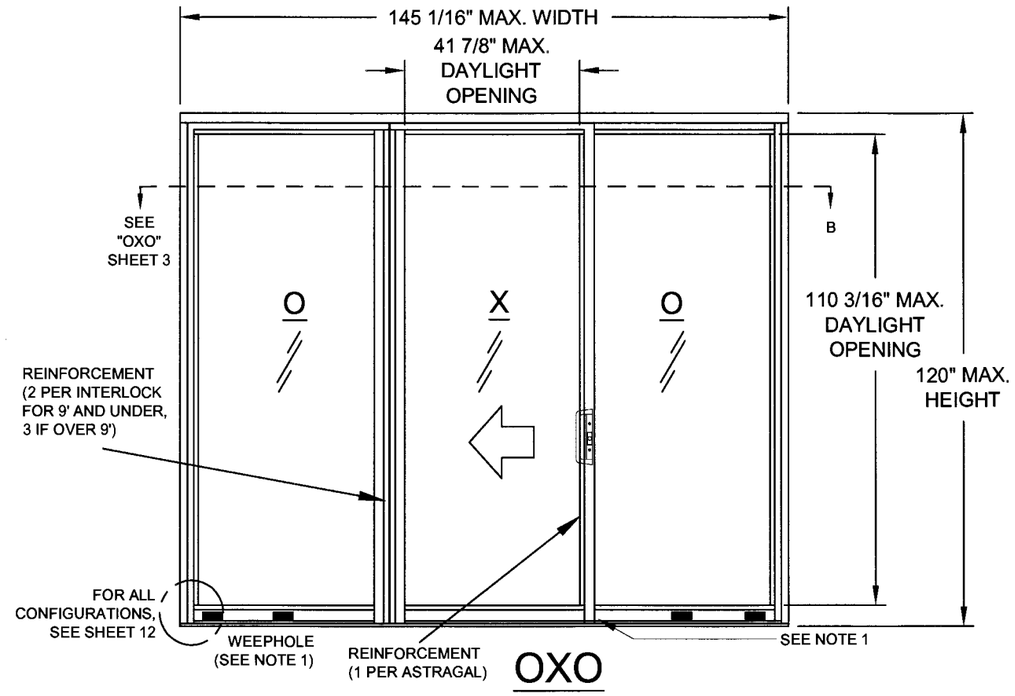


OXO

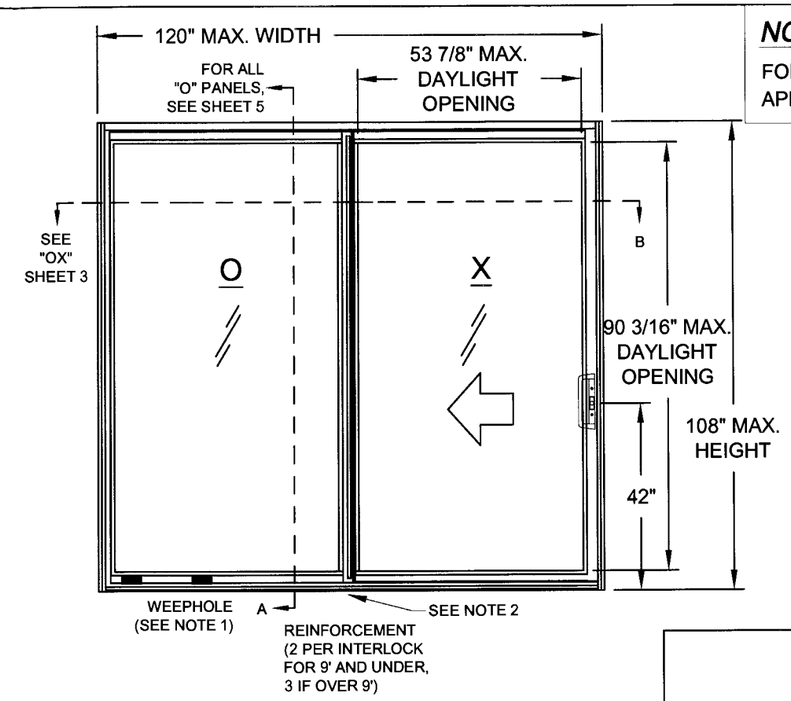


XO OR OX

**NOTE:**
FOR SMALL MISSILE APPLICATIONS ONLY

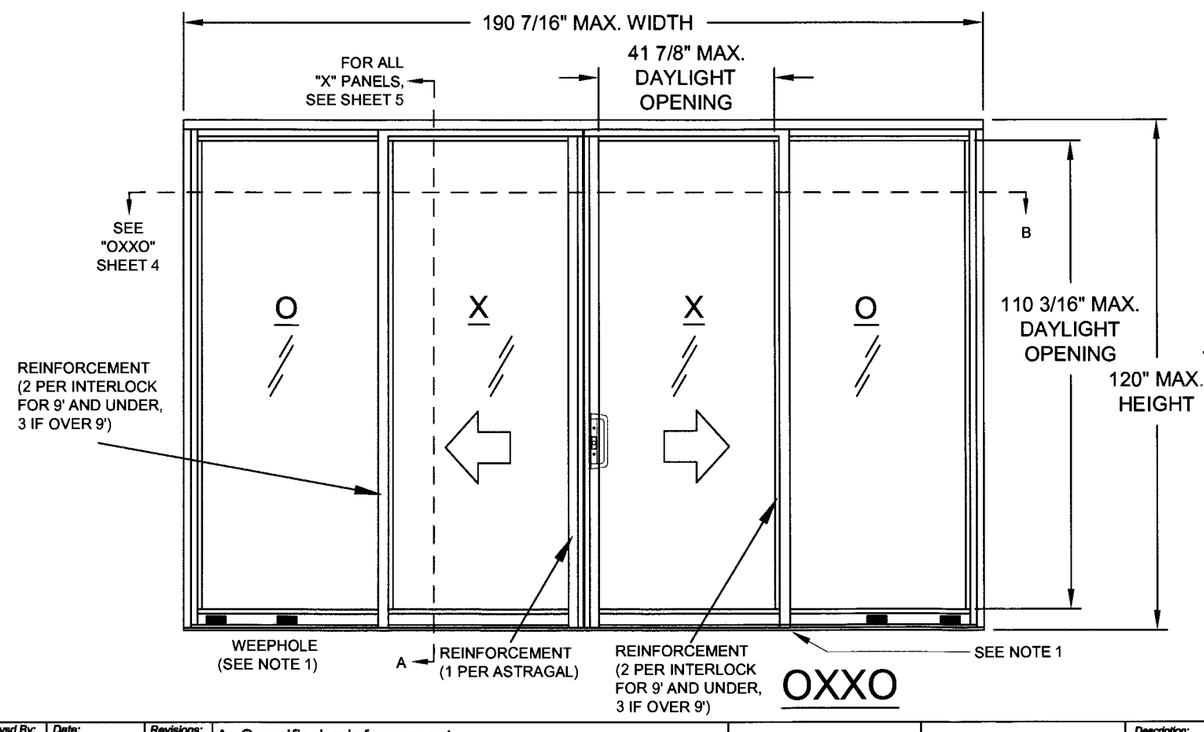


OXXO

NOTES:

1. 1-9/16" X 5/16" WEEPHOLES ARE LOCATED 6" FROM EACH END AND AT THE FIXED PANEL CENTER, (SEE SHEET 5).

2. FIXED PANEL ANGLE BRACKETS (ITEM 76) LOCATED AT THE HEAD AND SILL OF FIXED PANELS. SEE SHEET 6, DETAIL B.

3. ELEVATIONS ON THIS PAGE ARE FOR A DESIGN PRESSURE OF +/- 165.0 PSF.

Approved as complying with the Florida Building Code
Date 02/14/2008
NOA# 07-0905.04
Miami Dade Product Control Division
By

11/20/07

Robert L. Clark, P.E.
PE #39712
Structural

| Revsd By: | Date: | Revisions: | |
|---|---|---|---|
| J.R. | 11/05/07 | A | A. Specified reinforcement |
| J.R. | 11/20/07 | B | B. Added Note 3 |
| | | | |
| Drawn By: J.R. | Date: 8/01/07 | Checked By: | Date: |

1070 TECHNOLOGY DRIVE
NOKOMIS, FL 34275

P.O. BOX 1529
NOKOMIS, FL 34274

PGT
Visibly Better

Description: ELEVATIONS

Title: ALUM. SGD SERIES 3030, (SMALL MISSILE)

| Series/Model: | Scale: | Sheet: | Drawing No. | Rev: |
|---|---|---|---|---|
| SGD3030 | NTS | 3 of 18 | 3030-SM-165 | B |

**NOTE:**
FOR SMALL MISSILE APPLICATIONS ONLY

## OXXO

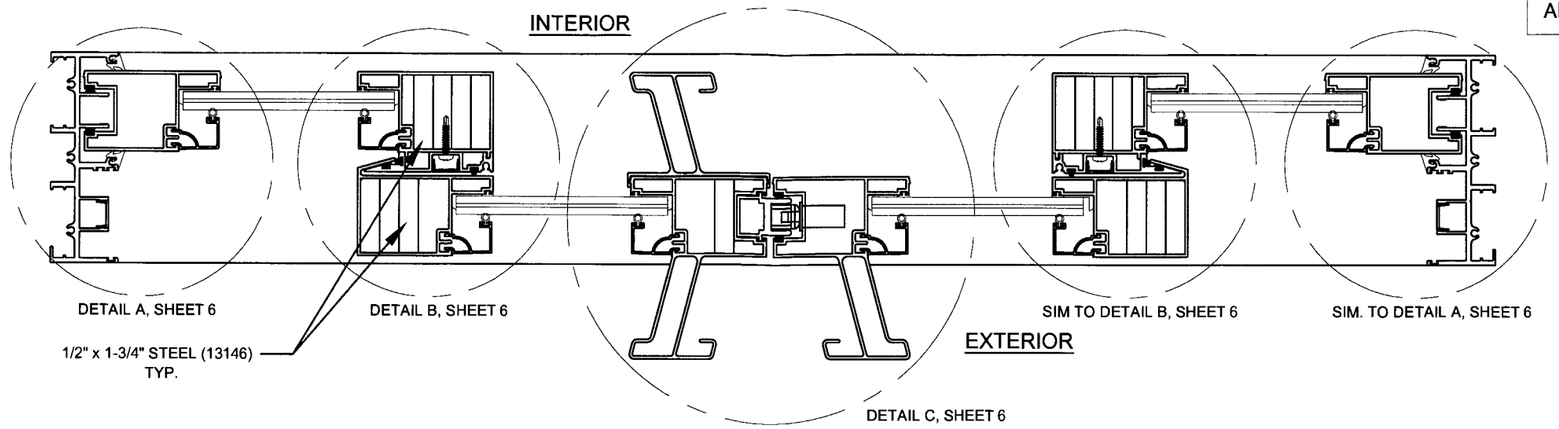


## OXO

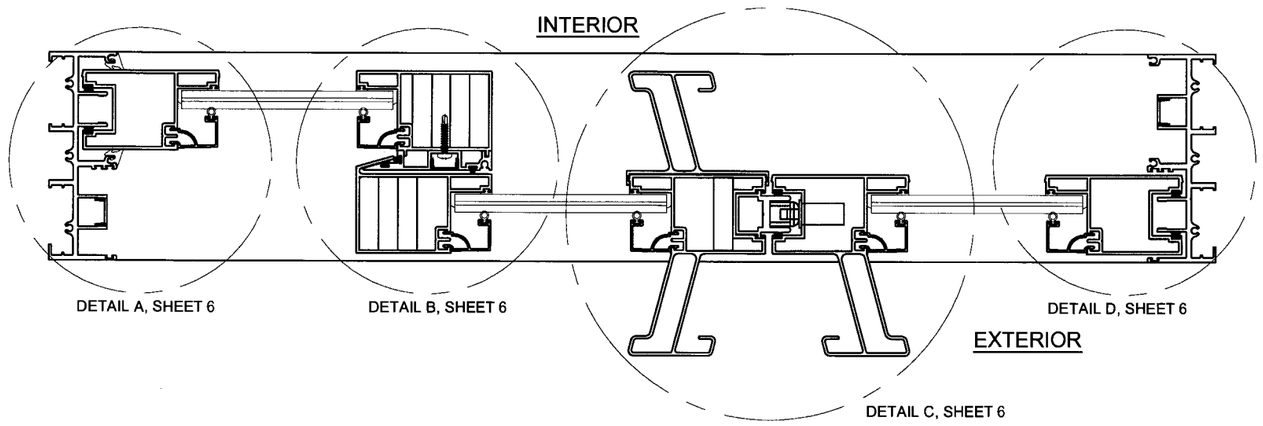


## OX (XO SIMILAR)

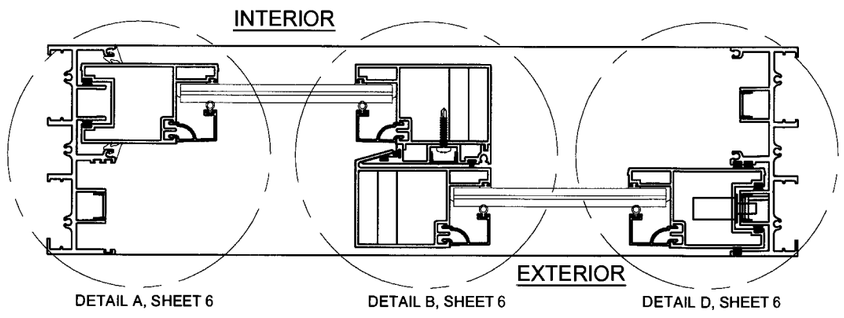


Approved as complying with the Florida Building Code
Date 02/14/2008
NOA#07-0905.04
Miami Dade Product Control Division
By Manuel Perez

| Revsd By: | Date: | Revisions: | |
|---|---|---|---|
| J.R. | 11/05/07 | A | A. Added reinforcement to x-sections |
| J.R. | 11/20/07 | B | B. No changes this sheet. |
| Revsd By: | Date: | Revisions: | |
| Drawn By: J.R. | Date: 8/01/07 | Checked By: | Date: |

1070 TECHNOLOGY DRIVE
NOKOMIS, FL 34275

P.O. BOX 1529
NOKOMIS, FL 34274

PGT
Visibly Better

Description: CONFIGURATIONS

Title: ALUM. SGD SERIES 3030, (SMALL MISSILE)

| Series/Model: | Scale: | Sheet: | Drawing No. | Rev: |
|---|---|---|---|---|
| SGD3030 | 1/4 | 4 of 18 | 3030-SM-165 | B |

11/20/07

Robert L. Clark, P.E.
PE #39712
Structural

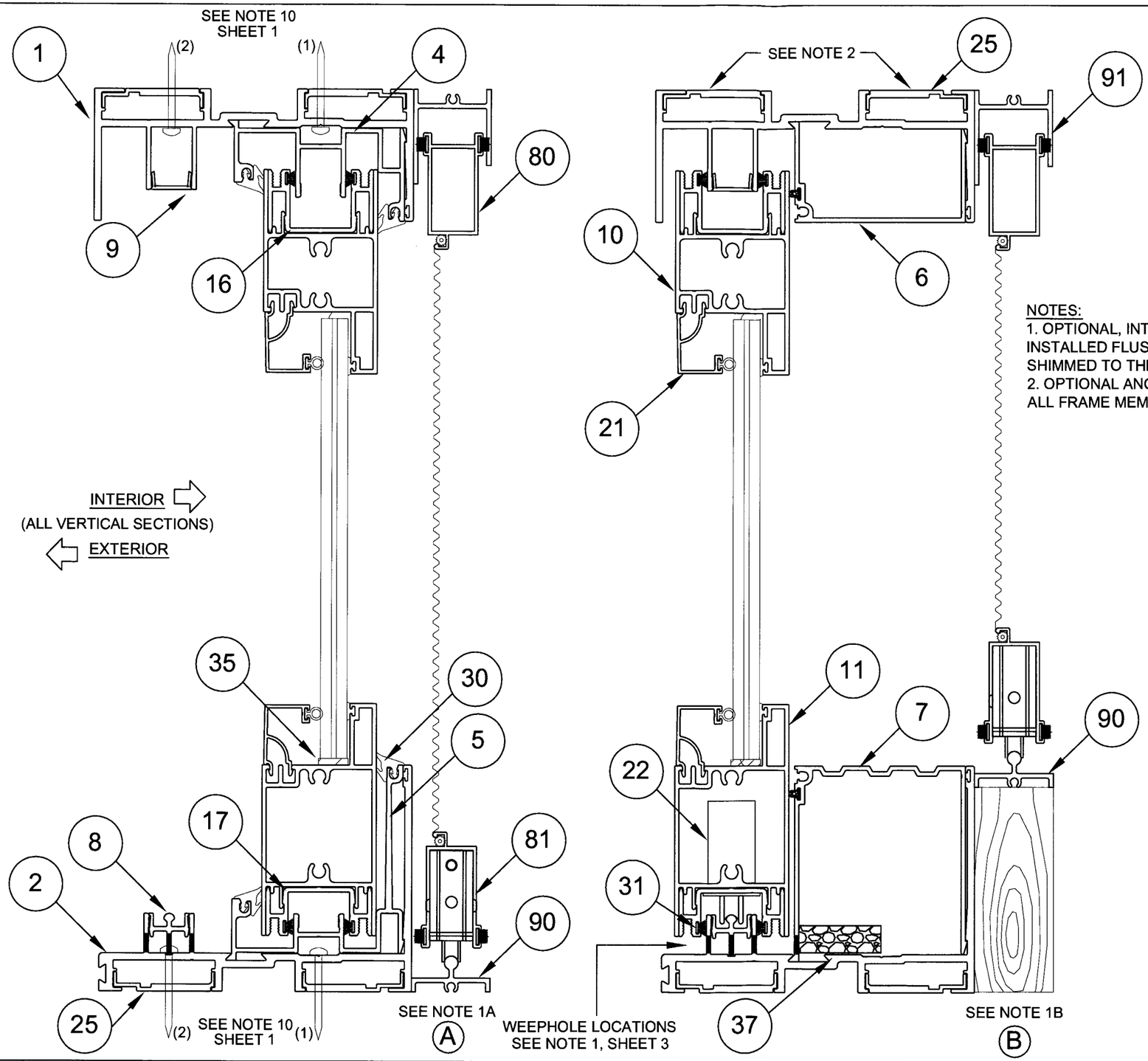


***NOTE:***

FOR SMALL MISSILE APPLICATIONS ONLY

NOTES:

1. OPTIONAL, INTERIOR SCREEN MAY BE INSTALLED FLUSH TO THE TRACK (A), OR SHIMMED TO THE FINISHED FLOOR HEIGHT (B).
2. OPTIONAL ANCHOR PLATE (25) INSTALLED IN ALL FRAME MEMBERS, FOR FULL DESIGN LOADS.

Approved as complying with the Florida Building Code
Date 02/14/2008
NOA# 07-0905.04
Miami Dade Product Control Division
By Manuel Perez

11/20/07

Robert L. Clark, P.E.
PE #39712
Structural

| Revsd By: | Date: | Revisions: | |
|---|---|---|---|
| J.R. | 11/05/07 | A | A. No changes this sheet |
| Revsd By: J.R. | Date: 11/20/07 | Revisions: B | B. No changes this sheet. |
| Revsd By: | Date: | Revisions: | |
| Drawn By: J.R. | Date: 8/01/07 | Checked By: | Date: |

1070 TECHNOLOGY DRIVE
NOKOMIS, FL 34275

P.O. BOX 1529
NOKOMIS, FL 34274

PGT
Visibly Better

Description: VERTICAL CROSS SECTIONS

Title: ALUM. SGD SERIES 3030, (SMALL MISSILE)

| Series/Model: | Scale: | Sheet: | Drawing No. | Rev: |
|---|---|---|---|---|
| SGD3030 | 1/2 | 5 of 18 | 3030-SM-165 | B |

**NOTE:**
FOR SMALL MISSILE APPLICATIONS ONLY

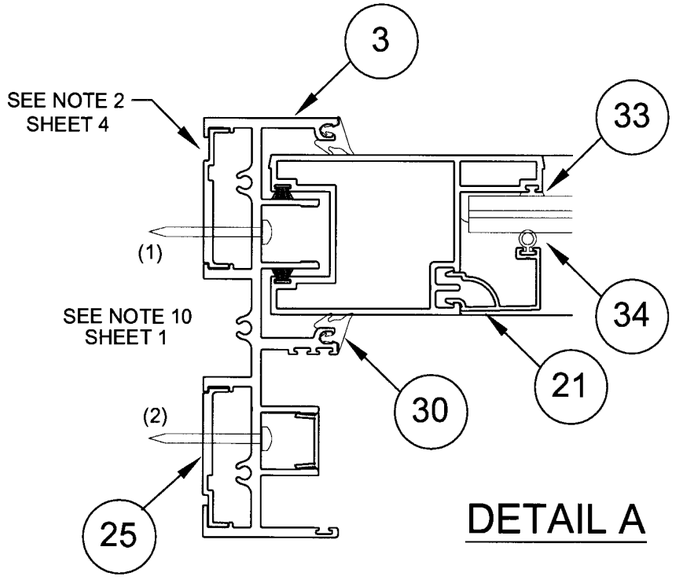


DETAIL A

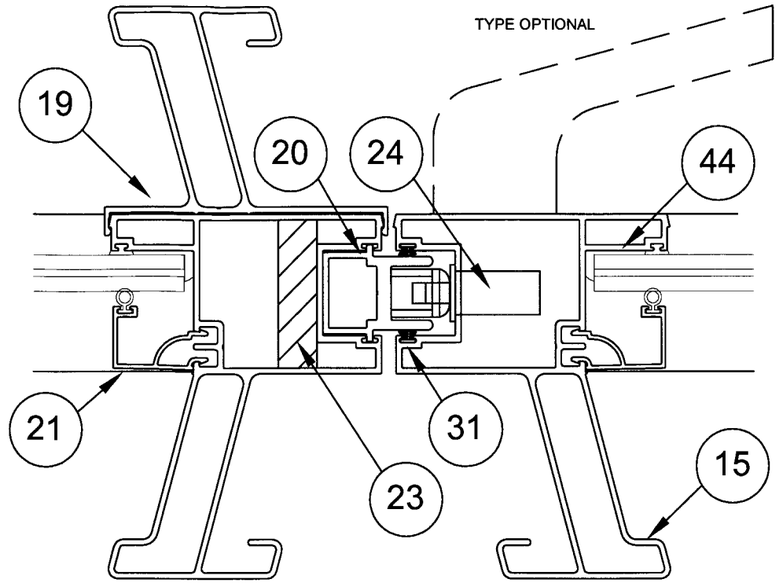


DETAIL C

INTERIOR
(ALL HORIZ. SECTIONS)
EXTERIOR

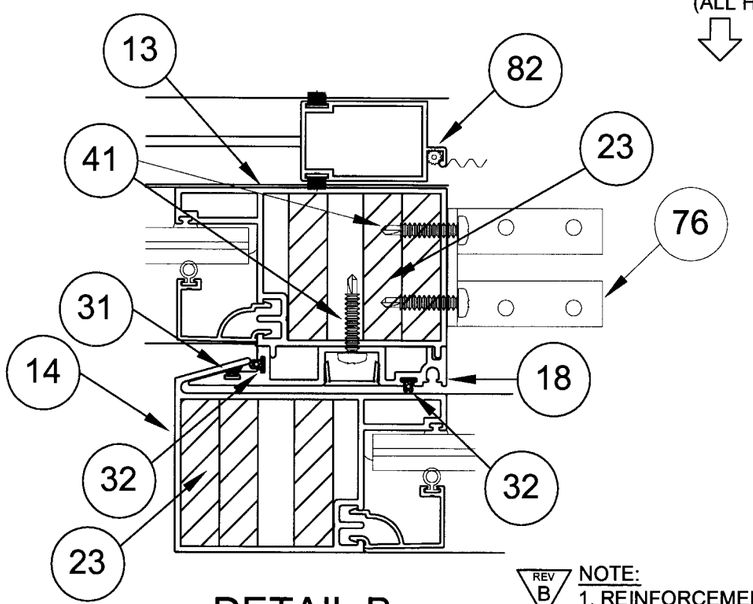


DETAIL B

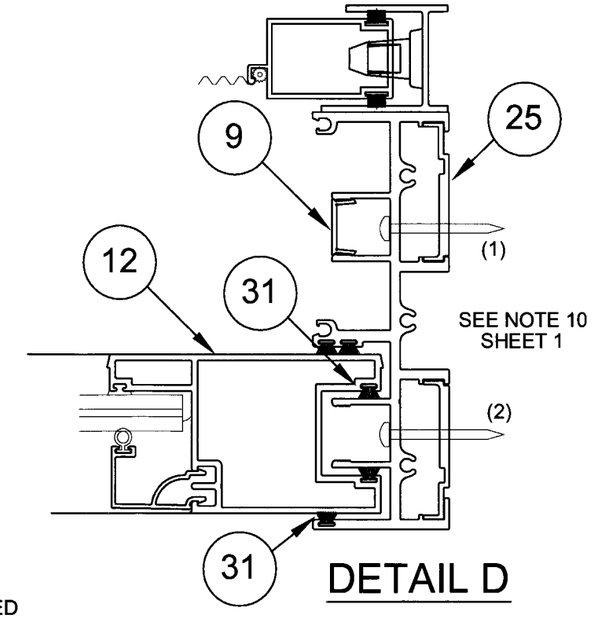


DETAIL D

REV B

NOTE:
1. REINFORCEMENTS (ITEM 23), MUST BE USED IN THE QUANTITIES SHOWN, IRREGARDLESS OF REQUIRED SIZE OR DESIGN PRESSURE.

Approved as complying with the Florida Building Code
Date 02/19/2008
NOA# 07-0905.04
Miami Dade Product Control Division
By

11/20/07
Robert L. Clark, P.E.
PE #39712
Structural

| Revsd By: | Date: | Revisions: | |
|---|---|---|---|
| J.R. | 11/05/07 | A | A. Added reinforcement removed CMU option from detail |
| J.R. | 11/20/07 | B | moved Notes, corrected embedment and edge distance. |
| Revsd By: | Date: | Revisions: | B. Added Note for reinforcement |
| Drawn By: J.R. | Date: 8/01/07 | Checked By: | Date: |

1070 TECHNOLOGY DRIVE
NOKOMIS, FL 34275
P.O. BOX 1529
NOKOMIS, FL 34274

PGT
Visibly Better

Description: HORIZONTAL CROSS SECTIONS
Title: ALUM. SGD SERIES 3030, (SMALL MISSILE)

| Series/Model: | Scale: | Sheet: | Drawing No. | Rev: |
|---|---|---|---|---|
| SGD3030 | 1/2 | 6 of 18 | 3030-SM-165 | B |

| # | Dwg # | Description |
|---|---|---|
| 1 | 13120 | Main Frame Head |
| 2 | 13121 | Main Frame Sill |
| 3 | 13122 | Main Frame Jamb |
| 4 | 13135 | Fixed Panel Adapter Head |
| 5 | 13136 | Fixed Panel Adapter Sill |
| 6 | 13133 | Operable Panel Adapter Head |
| 7 | 13134 | Threshold |
| 8 | 13132 | Track |
| 9 | 13139 | Screw Cover |
| 10 | 13123 | Panel Top Rail |
| 11 | 13124 | Panel Bottom Rail |
| 12 | 13125 | Panel Side Rail |
| 13 | 13126 | Fixed Panel Interlock |
| 14 | 13127 | Operable Panel Interlock |
| 15 | 13128 | Astragal |
| 16 | 13137 | Top Rail Panel Adapter |
| 17 | 13138 | Bottom Rail Panel Adapter |
| 18 | 13129 | Interlock Add On |
| 19 | 13131 | Add On Handle |
| 20 | 13130 | Male Astragal |
| 21 | 13025 | 9/16" Bead |
| 22 | 8153 | Roller Assembly |
| 23 | 13146 | C-1018 CR Steel Reinf. Sy=54 kpsi |
| 24 | 4439 | Gemini Lock |
| 25 | 13150 | SGD Anchor Plate |
| 26 | 4437 | Thumbturn |
| 28 | 749 | Reinforcement Spring Clip |
| 29 | 13143 | Handle Set |
| 30 | 13144 | Fixed Panel Gasket |
| 31 | 61059 | Weatherstrip .187 X .210 FS |
| 32 | 1213 | Weatherstrip .187 X .200 QLON |
| 33 | 13115 | Glazing Leg Gasket |
| 34 | 6TP247 | Bead Weatherstrip |
| 35 | 1267 | Setting Block |
| 36 | 71695K | Panel Dust Plugs |

| # | Dwg # | Description |
|---|---|---|
| 37 | 7PAD1626 | Open Cell Foam Pad |
| 38 | 71420X | 1/4-20 x 1.25" Socket Head, SS |
| 39 | 13021 | #10 X 1.25" Ph, PH, SS |
| 40 | 7103239 | Tinnerman Nut, #10-32 |
| 41 | 710X34 | #10 x 3/4" Ph, PH, SS SD |
| 42 | 71032X | #10-32 x 1" Ph, FH, Self-Tap |
| 43 | 13044 | Panel Corner Key |
| 44 | | Silicone Glazing GE7700 or Equiv. |
| 45 | | Joint Sealant |
| 46 | 1135 | #10 x 3/4" Ph, PH, SS |
| 47 | 8052 | Cap Plug |
| 48 | 4385 | Bumper Stop |
| 49 | 78X38 | # 8 x 3/8" Tek |
| 76 | 74356A | Fixed Panel Angle Bracket |
| | | |

| # | Dwg # | Description (Screen) |
|---|---|---|
| 59 | 1135 | #10-32 X .875 PH Fl. MS |
| 60 | 653 | Jamb Keeper |
| 62 | 1235 | Weatherstrip .170 X .270 FS |
| 63 | 668 | Single Roller, SS |
| 64 | 4341 | X-Cam Latch |
| 65 | 1692 | Screen Spline |
| 66 | | Screen Cloth, 18 X 16 Mesh |
| 76 | 4356 | Fixed Panel Clip |
| 80 | 4317 | Screen Frame Top Rail |
| 81 | 4318 | Screen Frame Bottom Rail |
| 82 | 4319 | Screen Frame Side Rail |
| 85 | 4320 | Screen Frame Interlock |
| 86 | 4384 | Screen Astragal Adapter |
| 90 | 4424 | Screen, 1-Track Frame, Sill |
| 91 | 4425 | Screen, 1-Track Frame, Head |
| 92 | 4426 | Screen, 1-Track Frame, Jamb |
| | | |

***NOTE:***

FOR SMALL MISSILE APPLICATIONS ONLY

Approved as complying with the Florida Building Code
Date 02/19/2008
NOA# 07-0905.04
Miami Dade Product Control Division
By Manuel Perez

11/20/07

Robert L. Clark, P.E.
PE #39712
Structural

| Revsd By: | Date: | Revisions: | |
|---|---|---|---|
| J.R. | 11/05/07 | A | A. added screw sizes, reinforcement |
| J.R. | 11/20/07 | B | B. No changes this sheet. |
| Revsd By: | Date: | Revisions: | |
| Drawn By: J.R. | Date: 8/01/07 | Checked By: | Date: |

1070 TECHNOLOGY DRIVE
NOKOMIS, FL 34275

P.O. BOX 1529
NOKOMIS, FL 34274

PGT
Visibly Better

Description: PARTS LIST

Title: ALUM. SGD SERIES 3030, (SMALL MISSILE)

| Series/Model: | Scale: | Sheet: | Drawing No. | Rev: |
|---|---|---|---|---|
| SGD3030 | NTS | 7 of 18 | 3030-SM-165 | B |

**NOTE:**
FOR SMALL MISSILE APPLICATIONS ONLY

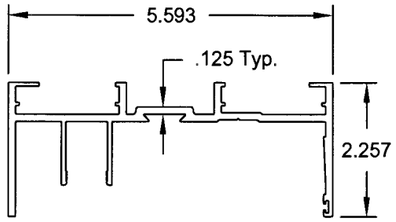


1 Main Frame Head
13120 (49060)

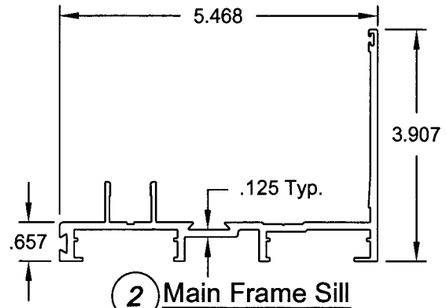


2 Main Frame Sill
13121 (49061)

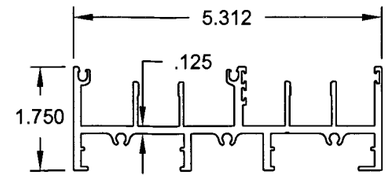


3 Main Frame Jamb
13122 (49062)

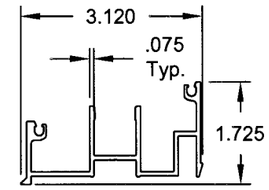


4 Fixed Panel Adapter Head
13135 (49075)

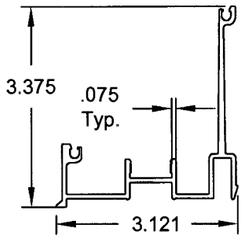


5 Fixed Panel Adapter Sill
13136 (49076)

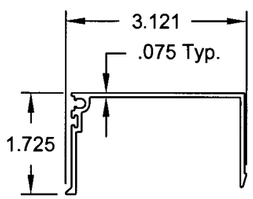


6 Operable Panel Adapter Head
13133 (49073)

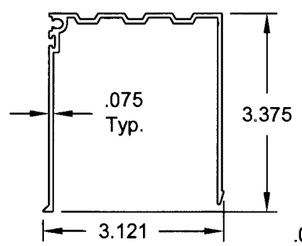


7 Threshold
13134 (49074)

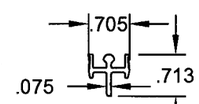


8 Track
13132
(49072)

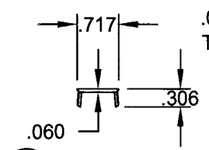


9 Screw Cover
13139
(49079)

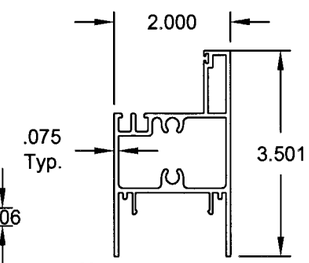


10 Panel Top Rail
13123 (49063)

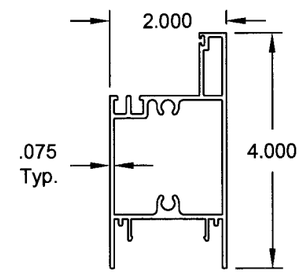


11 Panel Bottom Rail
13124 (49064)

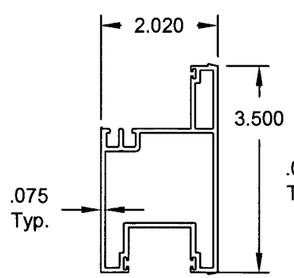


12 Panel Side Rail
13125 (49065)

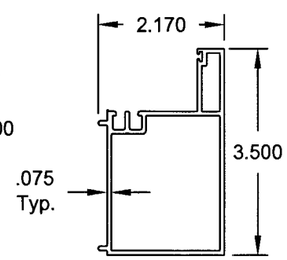


13 Fixed Panel Interlock
13126 (49066)

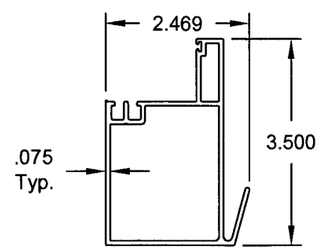


14 Operable Panel Interlock
13127 (49067)

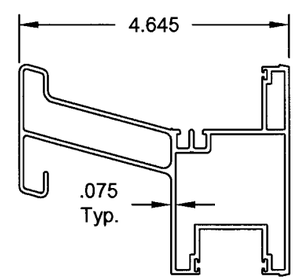


15 Astragal
13128 (49068)

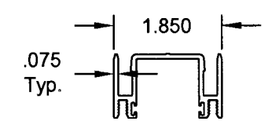


16 Top Rail Panel Adapter
13137 (49077)

Approved as complying with the Florida Building Code
Date 02/14/2008
NOA# 07-0905.04
Miami Dade Product Control Division
By

11/20/07
Robert L. Clark, P.E.
PE #39712
Structural

| Revsd By: | Date: | Revisions: | |
|---|---|---|---|
| J.R. | 11/05/07 | A | A. No changes this sheet |
| J.R. | 11/20/07 | B | B. No changes this sheet. |
| Revsd By: | Date: | Revisions: | |
| Drawn By: J.R. | Date: 8/01/07 | Checked By: | Date: |

1070 TECHNOLOGY DRIVE
NOKOMIS, FL 34275

P.O. BOX 1529
NOKOMIS, FL 34274

PGT
Visibly Better

Description: EXTRUSIONS

Title: ALUM. SGD SERIES 3030, (SMALL MISSILE)

| Series/Model: | Scale: | Sheet: | Drawing No. | Rev: |
|---|---|---|---|---|
| SGD3030 | .75 | 8 of 18 | 3030-SM-165 | B |

**NOTE:**
FOR SMALL MISSILE APPLICATIONS ONLY

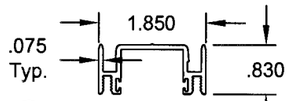


(17) Bottom Rail Panel Adapter
13138 (49078)

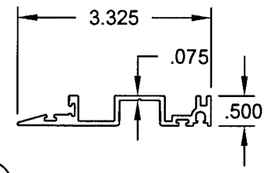


(18) Interlock Add On
13129 (49069)

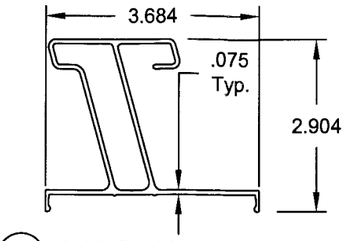


(19) Add On Handle
13131 (49071)

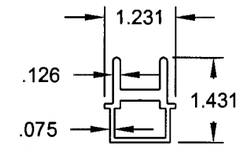


(20) Male Astragal
13130 (49070)

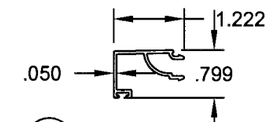


(21) 9/16" Bead
13025

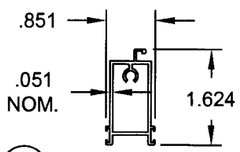


(80) Screen Frame Top Rail
4317

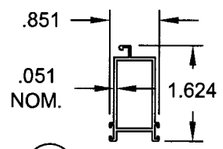


(81) Bottom Rail
4318

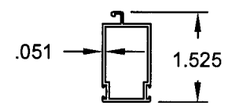


(82) Screen Frame Side Rail
4319

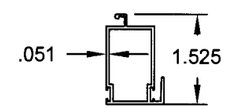


(85) Screen Frame Meeting Rail
4320

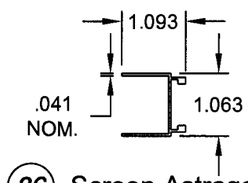


(86) Screen Astragal Adapter
4384

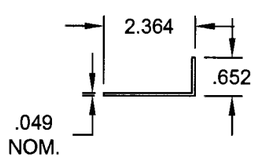


(76) Fixed Panel Clip
4356

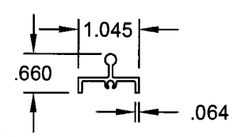


(90) Screen, 1 Track Frame, Sill
4424

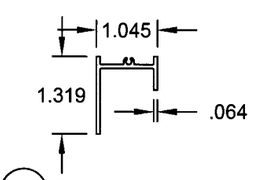


(91) Screen, 1 Track Frame, Head
4425

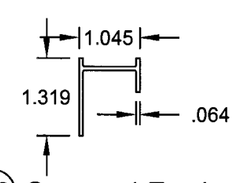


(92) Screen, 1 Track Frame, Jamb
4426

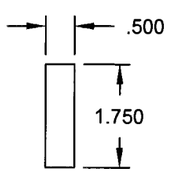


(23s) Reinforcement Steel (13146)

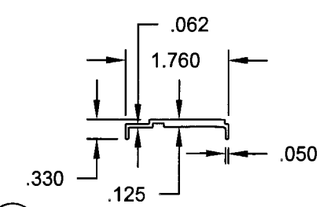


(25) SGD Anchor Plate
13150

Approved as complying with the Florida Building Code
Date 02/14/2008
NOA# 07-0905.04
Miami Dade Product Control Division
By

11/20/07

Robert L. Clark, P.E.
PE #39712
Structural

| Revsd By: | Date: | Revisions: | |
|---|---|---|---|
| J.R. | 11/05/07 | A | A. Removed Al reinforcement |
| J.R. | 11/20/07 | B | B. No changes this sheet. |
| Revsd By: | Date: | Revisions: | |
| Drawn By: J.R. | Date: 8/01/07 | Checked By: | Date: |

1070 TECHNOLOGY DRIVE
NOKOMIS, FL 34275

P.O. BOX 1529
NOKOMIS, FL 34274

PGT Visibly Better

Description: EXTRUSIONS (CONT.)

Title: ALUM. SGD SERIES 3030, (SMALL MISSILE)

| Series/Model: | Scale: | Sheet: | Drawing No. | Rev: |
|---|---|---|---|---|
| SGD3030 | .75 | 9 of 18 | 3030-SM-165 | B |

# FACTORY-INSTALLED HARDWARE

**NOTE:**
FOR SMALL MISSILE APPLICATIONS ONLY

(34) Bead Wstp.
6TP247

(31) Wstp .187 x .210 FS
61059

(32) Wstp .187 x .200 QLON
6Q200K (1213)

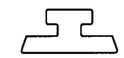

(33) Glazing Leg Gasket
13115

(38) Panel Assembly Screw
1/4-20 x 1.25" Socket Head,
SS71420X114SHCFX

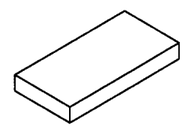

(35) Setting Block
71267N (1267)

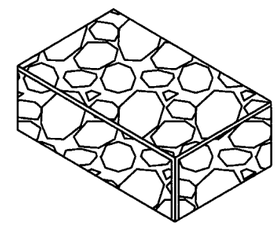

(37) Open Cell Foam Pad
7PAD1626

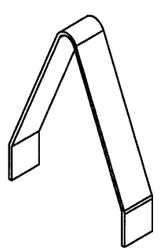

(28) Reinforcement
Spring Clip
749 (7BRKTM25)

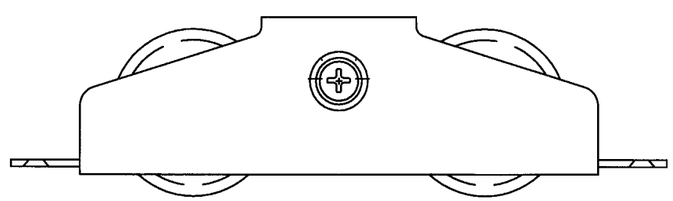

(22) Roller Assembly
Side Mount Shown
8153 (78153N)

Approved as complying with the Florida Building Code
Date 02/14/2008
NOA# 07-0906.04
Miami Dade Product Control Division
By

11/20/07

Robert L. Clark, P.E.
PE #39712
Structural

| Revsd By: | Date: | Revisions: | |
|---|---|---|---|
| J.R. | 11/05/07 | A | A. No changes this sheet |
| J.R. | 11/20/07 | B | B. No changes this sheet. |
| Revsd By: | Date: | Revisions: | |
| Drawn By: J.R. | Date: 8/01/07 | Checked By: | Date: |

1070 TECHNOLOGY DRIVE
NOKOMIS, FL 34275

P.O. BOX 1529
NOKOMIS, FL 34274

PGT
Visibly Better

Description: PARTS DETAIL

Title: ALUM. SGD SERIES 3030, (SMALL MISSILE)

| Series/Model: | Scale: | Sheet: | Drawing No. | Rev: |
|---|---|---|---|---|
| SGD3030 | 1/4x | 10 of 18 | 3030-SM-165 | B |

# FIELD-INSTALLED HARDWARE

**NOTE:**
FOR SMALL MISSILE APPLICATIONS ONLY

(30) Fixed Panel Gasket
GG38500 (13144)

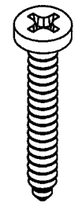

(39) Frame Assembly Screw
#10 X 1.25" Ph, PH, SS
13021

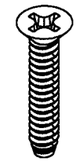

(42) Mortise Latch/Roller Screw
#10-32 x 1" Ph, FH,
Self-Tap 71032X1FPFX

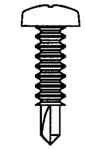

(41) Interlock Screw
#10 x 3/4" Ph, PH, SS
SD 710X34PPSDAX

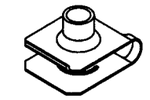

(40) Tinnerman Nut
7103239

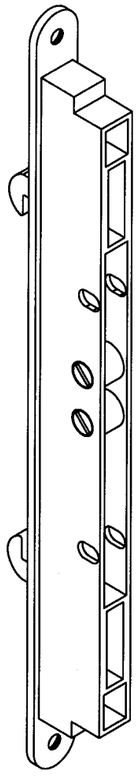

(25) 1/2" SS Keeper
4438

(24) Gemini Lock
78185X (4439)

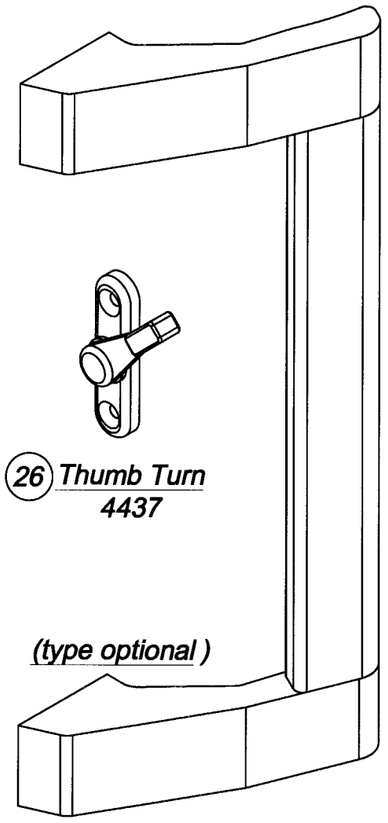

(26) Thumb Turn
4437

(type optional)

(29) Handle Set ( 13143)
DL915A (Bronze)
DL915DU (Satin)

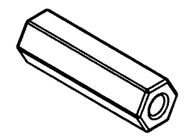

(45) Double Handle Nut
1137816 (13140)

(46) Keeper Screw
#10 x 3/4" Ph, PH, SS
710X115PPX

(47) Cap Plug
48052 (8052)

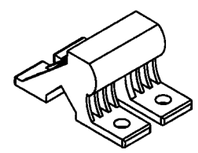

(48) 4 Hole Bumper Stop
4385 (71164W, K, S)

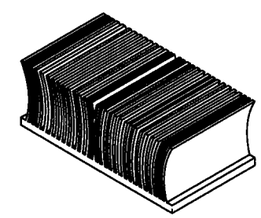

(36) 1.5 X 1.0 X .75
Dust Plug
71695K

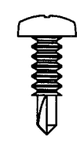

(49) Bumper StopScrew
# 8 x 3/8" Tek
78X38PPTX

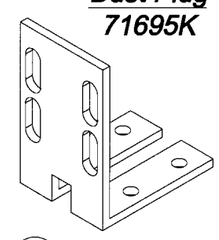

(76) Fixed Panel
Angle Bracket
74356A

Approved as complying with the Florida Building Code
Date 02/14/2008
NOA# 07-0906.04
Miami Dade Product Control Division
By

11/20/07

Robert L. Clark, P.E.
PE #39712
Structural

| Revsd By: | Date: | Revisions: | |
|---|---|---|---|
| J.R. | 11/05/07 | A | A. No changes this sheet |
| J.R. | 11/20/07 | B | B. No changes this sheet. |
| Revsd By: | Date: | Revisions: | |
| Drawn By: J.R. | Date: 8/01/07 | Checked By: | Date: |

1070 TECHNOLOGY DRIVE
NOKOMIS, FL 34275

P.O. BOX 1529
NOKOMIS, FL 34274

PGT
Visibly Better

Description: PARTS DETAIL (CONT.)

Title: ALUM. SGD SERIES 3030, (SMALL MISSILE)

| Series/Model: | Scale: | Sheet: | Drawing No. | Rev: |
|---|---|---|---|---|
| SGD3030 | NTS | 11 of 18 | 3030-SM-165 | B |

**NOTE:**
FOR SMALL MISSILE APPLICATIONS ONLY

## PANEL TYPES

| PANEL LETTER | INTERIOR (ALL PANEL TYPES) EXTERIOR | | |
|---|---|---|---|
| XL | JAMB STILE | | EXTERIOR INTERLOCK |
| OR | INTERIOR INTERLOCK | | JAMB STILE |
| XAR | EXTERIOR INTERLOCK | 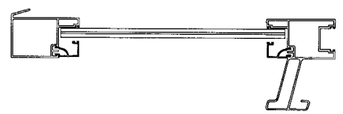 | ASTRAGAL |
| OL | JAMB STILE | | INTERIOR INTERLOCK |
| OAR | ASTRAGAL | | JAMB STILE |
| XAL | ASTRAGAL | 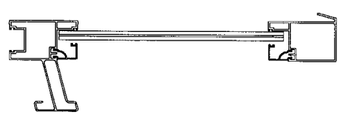 | EXTERIOR INTERLOCK |
| XR | EXTERIOR INTERLOCK | | JAMB STILE |
| OAL | JAMB STILE | | ASTRAGAL |

## MAIN FRAME

(TYP. HEAD & SILL)

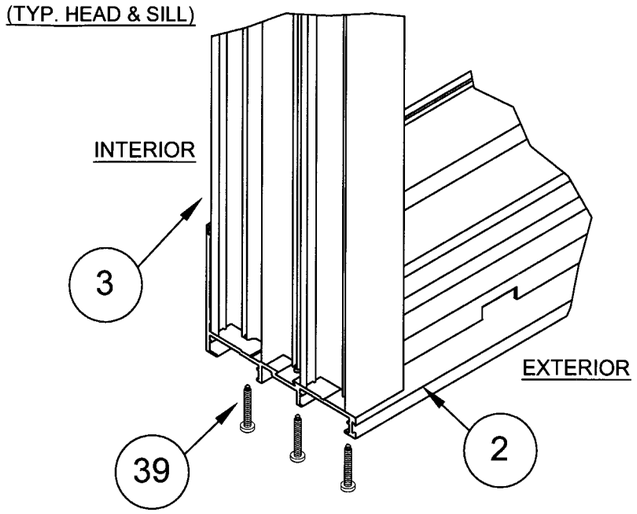


## PANEL

(TYP. HEAD & SILL)

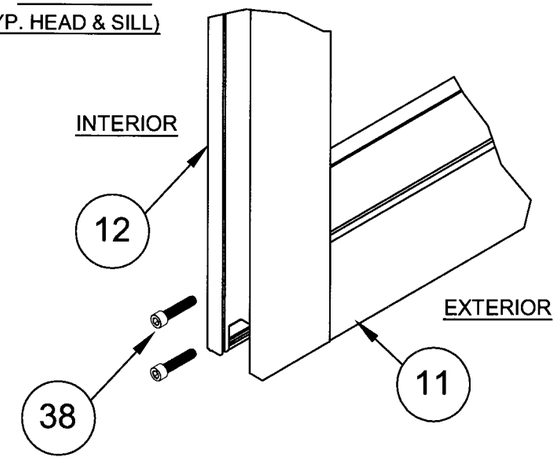


Approved as complying with the Florida Building Code
Date 02/14/2008
NOA# 07-0905.04
Miami Dade Product Control Division
By Manuel Perez

11/20/07
Robert L. Clark, P.E.
PE #39712
Structural

| Revsd By: | Date: | Revisions: | |
|---|---|---|---|
| J.R. | 11/05/07 | A | A. No changes this sheet |
| J.R. | 11/20/07 | B | B. No changes this sheet. |
| Revsd By: | Date: | Revisions: | |
| Drawn By: J.R. | Date: 8/01/07 | Checked By: | Date: |

1070 TECHNOLOGY DRIVE
NOKOMIS, FL 34275

P.O. BOX 1529
NOKOMIS, FL 34274

PGT Visibly Better

Description: PANEL TYPES & CORNER ASSEMBLY

Title: ALUM. SGD SERIES 3030, (SMALL MISSILE)

| Series/Model: | Scale: | Sheet: | Drawing No. | Rev: |
|---|---|---|---|---|
| SGD3030 | NTS | 12 of 18 | 3030-SM-165 | B |

**NOTE:**
FOR SMALL MISSILE APPLICATIONS ONLY

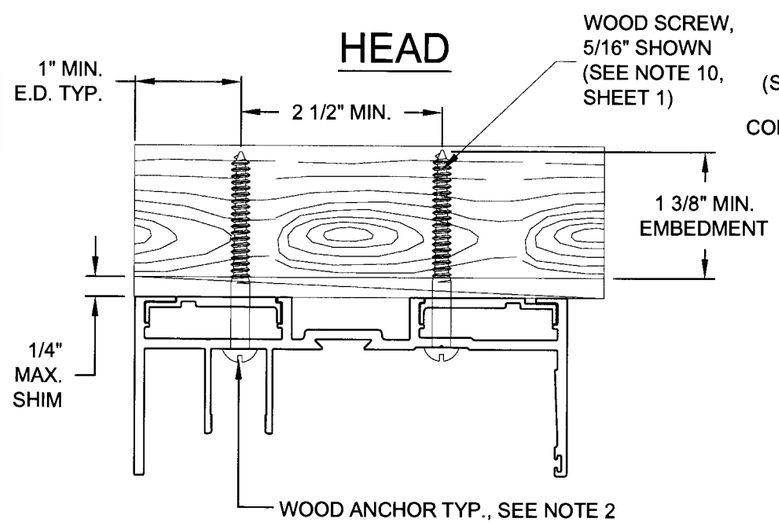


## DETAIL A

2X WOOD BUCK OR DIRECTLY INTO WOOD FRAMING, SEE NOTE 1

INTERIOR
(ALL VERTICAL SECTIONS)
EXTERIOR

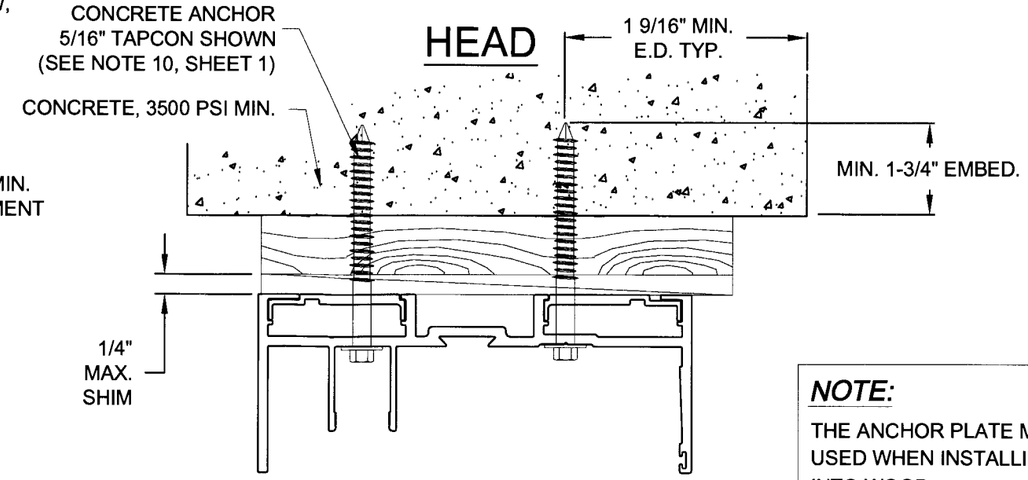


**NOTE:**
THE ANCHOR PLATE MUST BE USED WHEN INSTALLING INTO WOOD.

## DETAIL A

CONCRETE OR CONCRETE BLOCK SUBSTRATE WITH OPTIONAL 1X WOOD BUCK, SEE NOTE 1

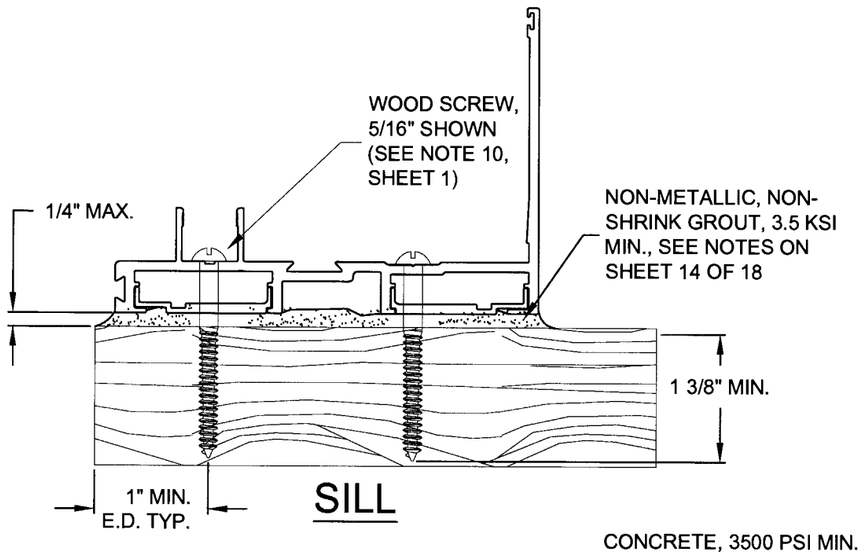


## SILL

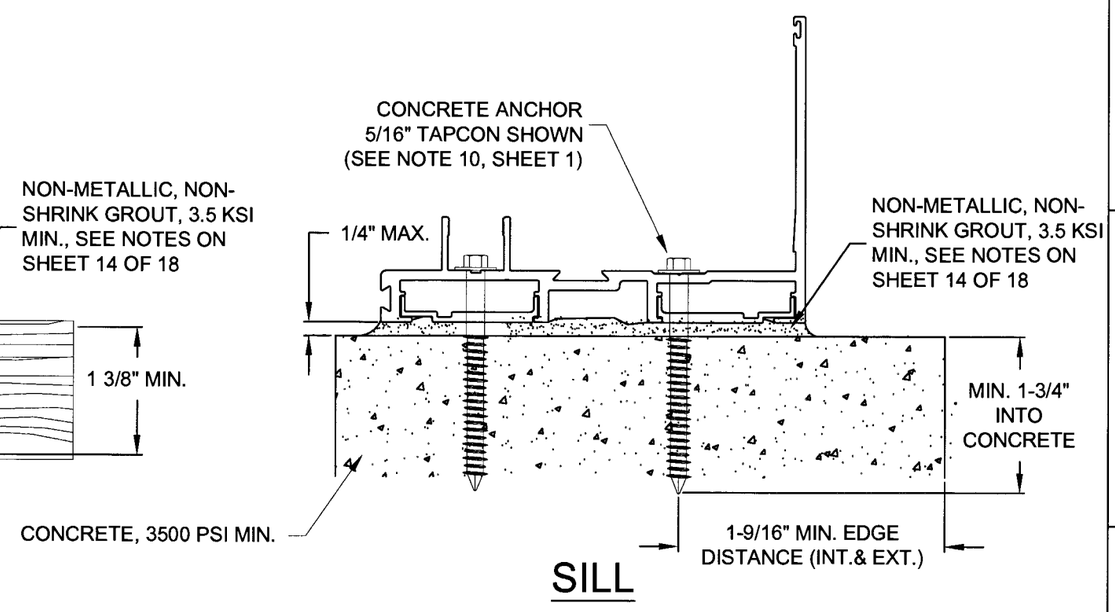


## SILL

Approved as complying with the Florida Building Code
Date 02/14/2008
NOA# 07-0905.04
Miami Dade Product Control Division
By Manuel Perez

11/20/07
Robert L. Clark, P.E.
PE #39712
Structural

| Revsd By: | Date: | Revisions: | |
|---|---|---|---|
| J.R. | 11/05/07 | A | A. Changed anchors to 5/16" Tapcon and wood screw, |
| J.R. | 11/20/07 | B | Changed to 3.5 KSI |
| | | | B. No changes this sheet. |
| Drawn By: J.R. | Date: 8/01/07 | Checked By: | Date: |

1070 TECHNOLOGY DRIVE
NOKOMIS, FL 34275

P.O. BOX 1529
NOKOMIS, FL 34274

PGT Visibly Better

Description: ANCHORAGE DETAILS

Title: ALUM. SGD SERIES 3030, (SMALL MISSILE)

| Series/Model: | Scale: | Sheet: | Drawing No. | Rev: |
|---|---|---|---|---|
| SGD3030 | .5 | 13 of 18 | 3030-SM-165 | B |

**NOTE:**
FOR SMALL MISSILE APPLICATIONS ONLY

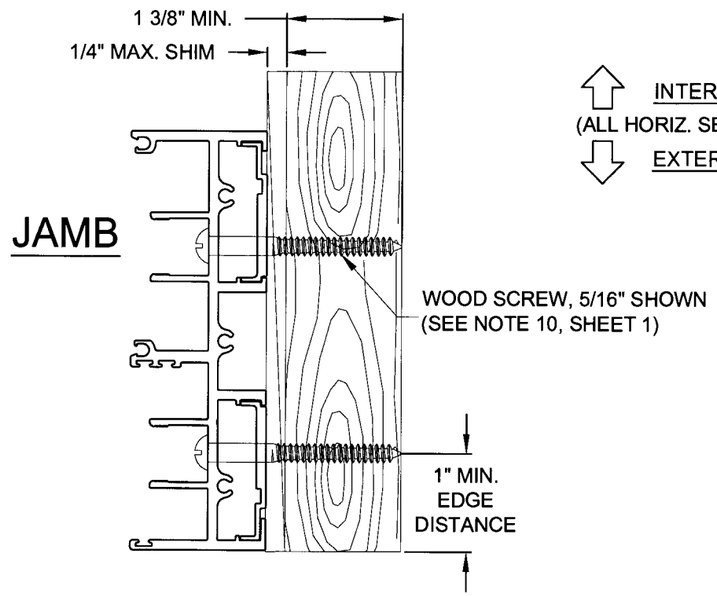


## DETAIL B

2X WOOD BUCK OR DIRECTLY INTO
WOOD FRAMING, SEE NOTE 1

INTERIOR
(ALL HORIZ. SECTIONS)
EXTERIOR

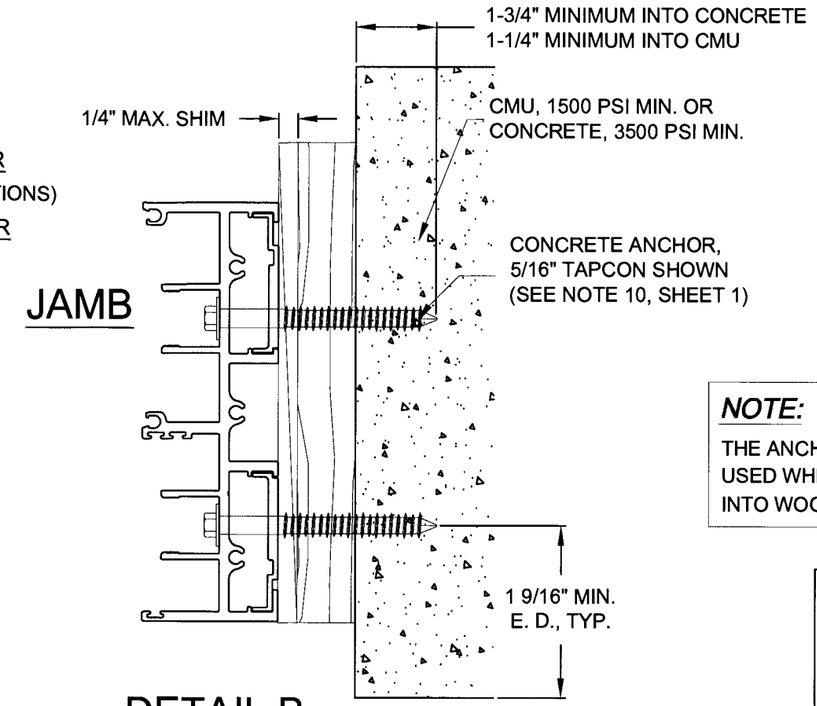


## DETAIL B

CONCRETE OR CONCRETE BLOCK SUBSTRATE
WITH OPTIONAL 1X WOOD BUCK, SEE NOTE 1

**NOTE:**
THE ANCHOR PLATE MUST BE USED WHEN INSTALLING INTO WOOD.

## NOTES:

1. FOR CONCRETE APPLICATIONS IN MIAMI-DADE COUNTY, USE ONLY MIAMI-DADE COUNTY APPROVED ANCHORS. SEE TYPE ON FOLLOWING SHEETS.
2. FOR WOOD APPLICATIONS USE #14 WOOD SCREWS. 5/16" ELCO TAPCONS MAY BE USED INSTEAD OF #14 SCREWS.

3. WOOD BUCKS DEPICTED AS 1x ARE LESS THAN 1 1/2" THICK. 1x WOOD BUCKS ARE OPTIONAL IF UNIT IS INSTALLED DIRECTLY TO SOLID CONCRETE. WOOD BUCKS DEPICTED AS 2x ARE 1 1/2" THICK OR GREATER. INSTALLATION TO THE SUBSTRATE OF WOOD BUCKS TO BE ENGINEERED BY OTHERS OR AS APPROVED BY THE AUTHORITY HAVING JURISDICTION (AHJ).

2. FOR ATTACHMENT TO ALUMINUM: THE MATERIAL SHALL BE A MINIMUM STRENGTH OF 6063-T5 AND A MINIMUM OF 1/8" THICK. THE ALUMINUM STRUCTURAL MEMBER SHALL BE OF A SIZE TO PROVIDE FULL SUPPORT TO THE WINDOW FRAME SIMILAR TO THAT SHOWN IN THESE DETAILS FOR 2x WOOD BUCKS. SHIMS MAY NOT BE USED. THE ANCHOR SHALL BE A #14 SHEET METAL SCREW WITH FULL ENGAGEMENT INTO THE ALUMINUM. IF THESE CRITERIA ARE MET, THE RESPECTIVE DESIGN PRESSURES, ANCHORAGE SPACING AND QUANTITIES FOR A #14 WOOD SCREW MAY BE USED.

5. IF SILL IS TIGHT TO SUBSTRATE, GROUT OR OTHER MATERIAL IS NOT REQUIRED. IF USED, NON-SHRINK, NON-METALLIC GROUT, 3500 PSI MIN., (DONE BYOTHERS) MUST FULLY SUPPORT THE ENTIRE LENGTH OF THE SILL THAT IS NOT TIGHT TO THE SUBSTRATE, AND TRANSFER SHEAR LOAD TO SUBSTRATE. IF SUBSTRATE IS WOOD, 30# FELT PAPER OR MASTIC IS REQUIRED BETWEEN THE GROUT AND WOOD SUBSTRATE, OR AS APPROVED BY THE AUTHORITY HAVING JURISDICTION. GROUT MAXIMUM THICKNESS TO BE .25".

Approved as complying with the Florida Building Code
Date 02/14/2008
NOA# 07-0905.04
Miami Dade Product Control Division
By

| Revsd By: | Date: | Revisions: | |
|---|---|---|---|
| J.R. | 11/05/07 | A | A. Changed anchors to 5/16" Tapcon and wood screw, |
| J.R. | 11/20/07 | B | Changed to 3.5 KSI |
| | | | B. No changes this sheet. |
| Drawn By: J.R. | Date: 8/01/07 | Checked By: | Date: |

1070 TECHNOLOGY DRIVE
NOKOMIS, FL 34275
P.O. BOX 1529
NOKOMIS, FL 34274

PGT Visibly Better

Description: ANCHORAGE DETAILS (CONT.)
Title: ALUM. SGD SERIES 3030, (SMALL MISSILE)

| Series/Model: | Scale: | Sheet: | Drawing No. | Rev: |
|---|---|---|---|---|
| SGD3030 | .5 | 14 of 18 | 3030-SM-165 | B |

11/20/07
Robert L. Clark, P.E.
PE #39712
Structural

**NOTE:**
FOR SMALL MISSILE APPLICATIONS ONLY

EXAMPLE 1:

FOR A REQUIRED DESIGN PRESSURE OF 152.3 PSF, DOOR SIZE OF 120" X 108", INSTALLED INTO CONCRETE, AND USING AN ANCHOR PLATE TO MINIMIZE ANCHORAGE QUANTITIES:

1. FOR THE DESIGN PRESSURE OF 152.3 PSF, CHOOSE THE CHART - SHEET 16.

2. FOR A DOOR SIZE OF 120" X 108", CHOOSE THE PANEL SIZE OF 60" X 108".

3.THE DOOR IS TO BE INSTALLED IN CONCRETE WITH THE ANCHOR PLATE, USE THE ANCHOR QUANTITY AS LISTED.

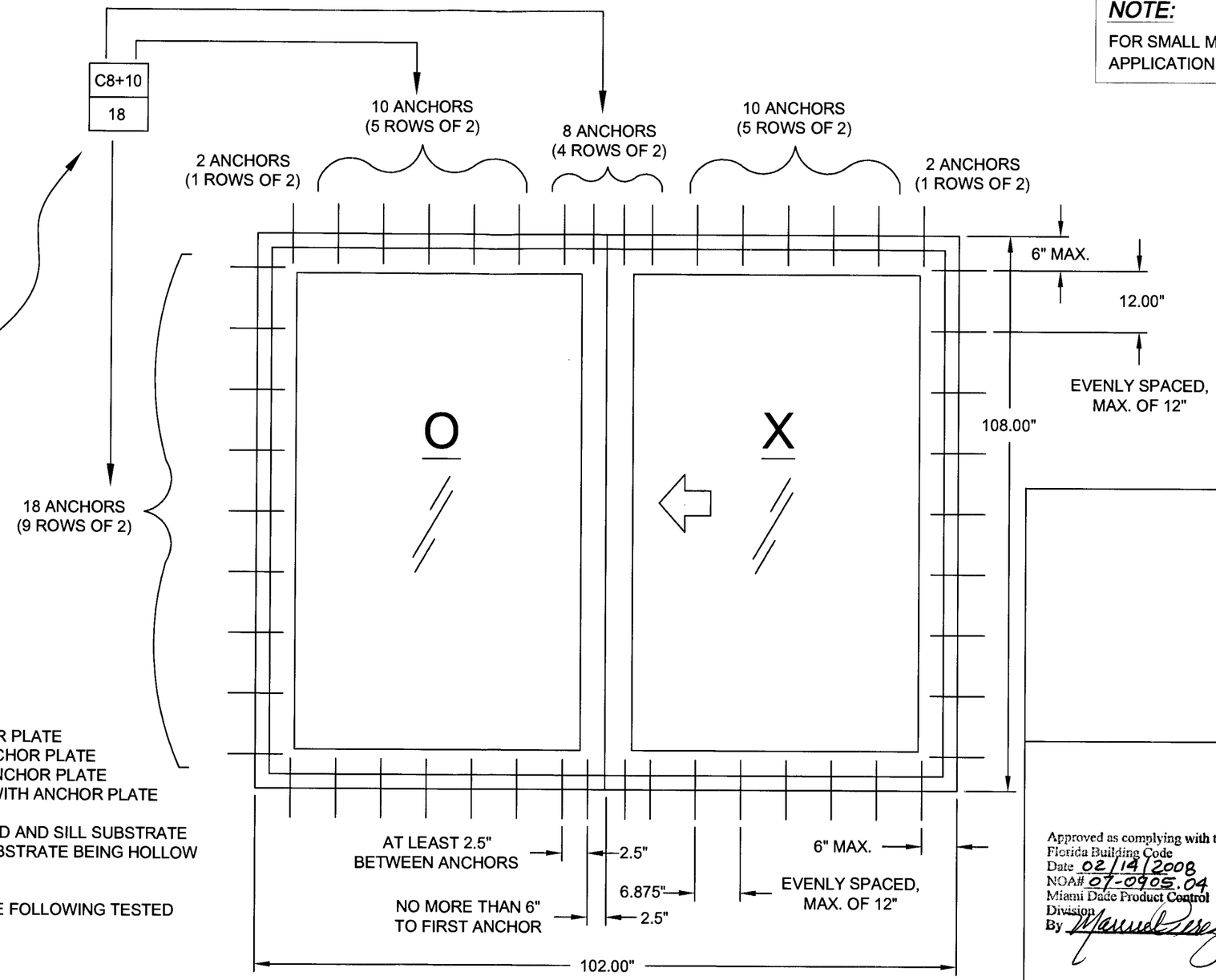


NOTES:
1. ANCHOR TYPES:
   1a. 5/16" ELCO TAPCON WITH ANCHOR PLATE
   1b. 5/16" ELCO TAPCON WITHOUT ANCHOR PLATE
   2. 1/4" ELCO S.S. CRETEFLEX WITH ANCHOR PLATE
   3. #14 WOOD SCREWS, INTO WOOD WITH ANCHOR PLATE

2. ANCHOR CALCULATIONS BASED ON HEAD AND SILL SUBSTRATE BEING 3500 KSI CONCRETE, AND JAMB SUBSTRATE BEING HOLLOW CMU OR CONCRETE.

3. ANCHOR LOCATIONS ARE BASED ON THE FOLLOWING TESTED DIMENSIONS AT FULL DP:
   HEAD/SILL:
   6" MAX. FROM TOP CORNERS
   12" MAX. ANCHOR TO ANCHOR
   6" MAX. TO THE LEFT AND RIGHT OF ASTRAGAL
   JAMBS:
   6" MAX. FROM TOP/BOTTOM CORNERS
   12" MAX. ANCHOR TO ANCHOR

NOTES:
1. HEADER ANCHOR LOCATIONS ALSO APPLY TO SILL, LEFT JAMB LOCATIONS APPLY TO RIGHT JAMB.

Approved as complying with the Florida Building Code
Date 02/14/2008
NOA# 07-0905.04
Miami Dade Product Control Division
By

11/20/07
Robert L. Clark, P.E.
PE #39712
Structural

| Revsd By: | Date: | Revisions: | |
|---|---|---|---|
| J.R. | 11/05/07 | A | A. New Drawing |
| J.R. | 11/20/07 | B | B. No changes this sheet. |
| Revsd By: | Date: | Revisions: | |
| Drawn By: J.R. | Date: 8/01/07 | Checked By: | Date: |

1070 TECHNOLOGY DRIVE
NOKOMIS, FL 34275
P.O. BOX 1529
NOKOMIS, FL 34274

PGT Visibly Better

Description: ANCHORAGE (CONT.)
Title: ALUM. SGD SERIES 3030, (SMALL MISSILE)

| Series/Model: | Scale: | Sheet: | Drawing No. | Rev: |
|---|---|---|---|---|
| SGD3030 | NTS | 15 of 18 | 3030-SM-165 | B |

**Anchor Quantity Required for a Max. Design Pressure (psf) of: +165.0 -165.0**

FOR THE JAMB, THE HEAD & SILL CLUSTER AND THE HEAD & SILL OUTSIDE OF THE CLUSTER

| Anchor Type and Substrate | | NOM. PANEL HEIGHT (IN) | | | | | | | | | | | | | | | | | | | |
|---|---|---|---|---|---|---|---|---|---|---|---|---|---|---|---|---|---|---|---|---|---|
| | | 80 | | | | 84 | | | | 96 | | | | 108 | | | | 120 | | | |
| NOM. PANEL WIDTH (IN) | FRAME SIDE | 1a, Concrete w/ Anchor Plate | 1b, Concrete | 2, Concrete w/ Anchor Plate | 3, Wood w/ Anchor Plate | 1a, Concrete w/ Anchor Plate | 1b, Concrete | 2, Concrete w/ Anchor Plate | 3, Wood w/ Anchor Plate | 1a, Concrete w/ Anchor Plate | 1b, Concrete | 2, Concrete w/ Anchor Plate | 3, Wood w/ Anchor Plate | 1a, Concrete w/ Anchor Plate | 1b, Concrete | 2, Concrete w/ Anchor Plate | 3, Wood w/ Anchor Plate | 1a, Concrete w/ Anchor Plate | 1b, Concrete | 2, Concrete w/ Anchor Plate | 3, Wood w/ Anchor Plate |
| 24 | Head & Sill | C4+4 | C10+4 | C4+4 | C4+4 | C4+4 | C10+4 | C4+4 | C6+4 | C4+4 | C12+4 | C6+4 | C6+4 | NOT AVAILABLE IN THESE SIZES | | | | | | | |
| | Jamb | 14 | 14 | 14 | 14 | 14 | 14 | 14 | 14 | 16 | 16 | 16 | 16 | | | | | | | | |
| 30 | Head & Sill | C4+4 | C12+4 | C6+4 | C6+4 | C4+4 | C12+4 | C6+4 | C6+4 | C4+4 | C14+4 | C6+4 | C6+4 | C4+4 | C16+4 | C6+4 | C8+4 | | | | |
| | Jamb | 14 | 14 | 14 | 14 | 14 | 14 | 14 | 14 | 16 | 16 | 16 | 16 | 18 | 18 | 18 | 18 | | | | |
| 36 | Head & Sill | C4+6 | C12+6 | C6+6 | C6+6 | C4+6 | C14+4 | C6+6 | C6+6 | C4+6 | C16+4 | C6+6 | C8+6 | C6+6 | C18+4 | C8+6 | C8+6 | C6+6 | C20+4 | C8+6 | C10+6 |
| | Jamb | 14 | 14 | 14 | 14 | 14 | 14 | 14 | 14 | 16 | 16 | 16 | 16 | 18 | 18 | 18 | 18 | 20 | 20 | 20 | 20 |
| 42 | Head & Sill | C4+6 | C14+6 | C6+6 | C8+6 | C4+6 | C14+6 | C6+6 | C8+6 | C6+6 | C18+6 | C8+6 | C8+6 | C6+6 | C20+6 | C8+6 | C10+6 | C6+6 | C22+6 | C10+6 | C12+6 |
| | Jamb | 14 | 14 | 14 | 14 | 14 | 14 | 14 | 14 | 16 | 16 | 16 | 16 | 18 | 18 | 18 | 18 | 20 | 20 | 20 | 20 |
| 48 | Head & Sill | C4+8 | C14+6 | C6+8 | C8+8 | C6+8 | C16+6 | C8+8 | C8+8 | C6+8 | C18+6 | C8+8 | C10+8 | C6+8 | C22+6 | C10+8 | C10+8 | C8+8 | C24+6 | C10+8 | C12+8 |
| | Jamb | 14 | 14 | 14 | 14 | 14 | 16 | 14 | 14 | 16 | 18 | 16 | 16 | 18 | 20 | 18 | 18 | 20 | 22 | 20 | 20 |
| 54 | Head & Sill | C6+8 | C16+8 | C8+8 | C8+8 | C6+8 | C16+8 | C8+8 | C8+8 | C6+8 | C20+8 | C8+8 | C10+8 | C8+8 | C24+8 | C10+8 | C12+8 | NOT AVAILABLE IN THESE SIZES | | | |
| | Jamb | 14 | 16 | 14 | 14 | 14 | 16 | 14 | 14 | 16 | 20 | 16 | 16 | 18 | 22 | 18 | 18 | | | | |
| 60 | Head & Sill | C6+10 | C16+10 | C8+10 | C8+10 | C6+10 | C18+10 | C8+10 | C8+10 | C6+10 | C22+10 | C10+10 | C10+10 | C8+10 | C26+10 | C10+10 | C12+10 | | | | |
| | Jamb | 14 | 18 | 14 | 14 | 14 | 18 | 14 | 14 | 16 | 22 | 16 | 16 | 18 | 24 | 18 | 18 | | | | |

***NOTE:***

FOR SMALL MISSILE APPLICATIONS ONLY

ANCHOR TYPES:
1a. 5/16" ELCO TAPCON WITH ANCHOR PLATE
1b. 5/16" ELCO TAPCON WITHOUT ANCHOR PLATE
2. 1/4" ELCO S.S. CRETEFLEX WITH ANCHOR PLATE
3. #14 WOOD SCREWS, INTO WOOD WITH ANCHOR PLATE

## TABLE KEY

TOTAL # OF ANCHORS THROUGH THE HEAD & SILL, TO THE LEFT AND RIGHT OF PANEL MEETING POINT

TOTAL # OF ANCHORS AT THE PANEL CENTER THROUGH THE HEAD & SILL (NOT INC. CORNER ANCHORAGE)

| C8+10 |
|---|
| 18 |

TOTAL # OF ANCHORS THROUGH THE FULL LENGTH OF THE JAMB (INC. CORNER ANCHORAGE)

ANCHOR PLATE NOTES:
1. THE ANCHOR PLATE IS TO BE USED WHEN SPECIFIED BY THE CHART. ANCHOR CAPACITY IS CRUCIAL TO THE USE OF THE ANCHOR PLATE.

2. THE ANCHOR PLATE IS ONLY OPTIONAL WHEN USING 5/16" TAPCONS. GREATER ANCHOR QUANTITIES MUST BE USED, AS LISTED IN THE CHART.

INSTRUCTIONS ON USING THE ANCHORAGE TABLES:
1. DETERMINE THE DESIGN PRESSURE REQUIRED AND CHOOSE THE APPROPRIATE CHART.

2. USING THE NOMINAL PANEL SIZE, AND THE PREDETERMINED ANCHORAGE TYPE, FIND THE REQUIRED ANCHORAGE QUANTITY.

3. INSTALL WITH THE ANCHOR CONDITIONS OF THE NOTES AND DETAILS OF SHEETS 13 & 14 OF 18.

Approved as complying with the Florida Building Code
Date 02/14/2008
NOA# 07-0905.04
Miami Dade Product Control Division
By Manuel Perez

| Revsd By: | Date: | Revisions: | |
|---|---|---|---|
| J.R. | 11/05/07 | A | A. Added notes |
| J.R. | 11/20/07 | B | B. No changes this sheet. |
| | | | |
| Drawn By: J.R. | Date: 8/01/07 | Checked By: | Date: |

1070 TECHNOLOGY DRIVE
NOKOMIS, FL 34275

P.O. BOX 1529
NOKOMIS, FL 34274

PGT Visibly Better

Description: ANCHOR QUANTITIES FOR 165 DP

Title: ALUM. SGD SERIES 3030, (SMALL MISSILE)

| Series/Model: | Scale: | Sheet: | Drawing No. | Rev: |
|---|---|---|---|---|
| SGD3030 | NTS | 16 of 18 | 3030-SM-165 | B |

11/20/07

Robert L. Clark, P.E.
PE #39712
Structural

**Anchor Quantity Required for a Max. Design Pressure (psf) of: +150.0 -150.0**

FOR THE JAMB, THE HEAD & SILL CLUSTER AND THE HEAD & SILL OUTSIDE OF THE CLUSTER

| Anchor Type and Substrate | | NOM. PANEL HEIGHT (IN) | | | | | | | | | | | | | | | | | | | |
|---|---|---|---|---|---|---|---|---|---|---|---|---|---|---|---|---|---|---|---|---|---|
| | | 80 | | | | 84 | | | | 96 | | | | 108 | | | | 120 | | | |
| NOM. PANEL WIDTH (IN) | FRAME SIDE | 1a, Concrete w/ Anchor Plate | 1b, Concrete | 2, Concrete w/ Anchor Plate | 3, Wood w/ Anchor Plate | 1a, Concrete w/ Anchor Plate | 1b, Concrete | 2, Concrete w/ Anchor Plate | 3, Wood w/ Anchor Plate | 1a, Concrete w/ Anchor Plate | 1b, Concrete | 2, Concrete w/ Anchor Plate | 3, Wood w/ Anchor Plate | 1a, Concrete w/ Anchor Plate | 1b, Concrete | 2, Concrete w/ Anchor Plate | 3, Wood w/ Anchor Plate | 1a, Concrete w/ Anchor Plate | 1b, Concrete | 2, Concrete w/ Anchor Plate | 3, Wood w/ Anchor Plate |
| 24 | Head & Sill | C4+4 | C8+4 | C4+4 | C4+4 | C4+4 | C10+4 | C4+4 | C4+4 | C4+4 | C10+4 | C4+4 | C6+4 | NOT AVAILABLE IN THESE SIZES | | | | | | | |
| | Jamb | 14 | 14 | 14 | 14 | 14 | 14 | 14 | 14 | 16 | 16 | 16 | 16 | | | | | | | | |
| 30 | Head & Sill | C4+4 | C10+4 | C4+4 | C6+4 | C4+4 | C10+4 | C4+4 | C6+4 | C4+4 | C12+4 | C6+4 | C6+4 | C4+4 | C14+4 | C6+4 | C8+4 | | | | |
| | Jamb | 14 | 14 | 14 | 14 | 14 | 14 | 14 | 14 | 16 | 16 | 16 | 16 | 18 | 18 | 18 | 18 | | | | |
| 36 | Head & Sill | C4+6 | C12+6 | C6+6 | C6+6 | C4+6 | C12+6 | C6+6 | C6+6 | C4+6 | C14+4 | C6+6 | C8+6 | C6+6 | C16+4 | C8+6 | C8+6 | C6+6 | C18+4 | C8+6 | C10+6 |
| | Jamb | 14 | 14 | 14 | 14 | 14 | 14 | 14 | 14 | 16 | 16 | 16 | 16 | 18 | 18 | 18 | 18 | 20 | 20 | 20 | 20 |
| 42 | Head & Sill | C4+6 | C12+6 | C6+6 | C6+6 | C4+6 | C14+6 | C6+6 | C6+6 | C6+6 | C16+6 | C8+6 | C8+6 | C6+6 | C18+6 | C8+6 | C10+6 | C6+6 | C20+6 | C10+6 | C10+6 |
| | Jamb | 14 | 14 | 14 | 14 | 14 | 14 | 14 | 14 | 16 | 16 | 16 | 16 | 18 | 18 | 18 | 18 | 20 | 20 | 20 | 20 |
| 48 | Head & Sill | C4+8 | C14+6 | C6+8 | C6+8 | C4+8 | C14+6 | C6+8 | C8+8 | C6+8 | C18+6 | C8+8 | C8+8 | C6+8 | C20+6 | C8+8 | C10+8 | C6+8 | C22+6 | C10+8 | C12+8 |
| | Jamb | 14 | 14 | 14 | 14 | 14 | 16 | 14 | 14 | 16 | 18 | 16 | 16 | 18 | 20 | 18 | 18 | 20 | 22 | 20 | 20 |
| 54 | Head & Sill | C4+8 | C14+8 | C6+8 | C8+8 | C4+8 | C16+8 | C6+8 | C8+8 | C6+8 | C18+8 | C8+8 | C10+8 | C6+8 | C22+8 | C10+8 | C10+8 | NOT AVAILABLE IN THESE SIZES | | | |
| | Jamb | 14 | 16 | 14 | 14 | 14 | 16 | 14 | 14 | 16 | 20 | 16 | 16 | 18 | 22 | 18 | 18 | | | | |
| 60 | Head & Sill | C4+10 | C16+10 | C6+10 | C8+10 | C6+10 | C16+10 | C8+10 | C8+10 | C6+10 | C20+10 | C8+10 | C10+10 | C8+10 | C22+10 | C10+10 | C12+10 | | | | |
| | Jamb | 14 | 18 | 14 | 14 | 14 | 18 | 14 | 14 | 16 | 22 | 16 | 16 | 18 | 24 | 18 | 18 | | | | |

***NOTE:***

FOR SMALL MISSILE APPLICATIONS ONLY

ANCHOR TYPES:
1a. 5/16" ELCO TAPCON WITH ANCHOR PLATE
1b. 5/16" ELCO TAPCON WITHOUT ANCHOR PLATE
2. 1/4" ELCO S.S. CRETEFLEX WITH ANCHOR PLATE
3. #14 WOOD SCREWS, INTO WOOD WITH ANCHOR PLATE

## TABLE KEY

TOTAL # OF ANCHORS THROUGH THE HEAD & SILL, TO THE LEFT AND RIGHT OF PANEL MEETING POINT

TOTAL # OF ANCHORS AT THE PANEL CENTER THROUGH THE HEAD & SILL (NOT INC. CORNER ANCHORAGE)

C8+10
18

TOTAL # OF ANCHORS THROUGH THE FULL LENGTH OF THE JAMB (INC. CORNER ANCHORAGE)

ANCHOR PLATE NOTES:
1. THE ANCHOR PLATE IS TO BE USED WHEN SPECIFIED BY THE CHART. ANCHOR CAPACITY IS CRUCIAL TO THE USE OF THE ANCHOR PLATE.

2. THE ANCHOR PLATE IS ONLY OPTIONAL WHEN USING 5/16" TAPCONS. GREATER ANCHOR QUANTITIES MUST BE USED, AS LISTED IN THE CHART.

INSTRUCTIONS ON USING THE ANCHORAGE TABLES:
1. DETERMINE THE DESIGN PRESSURE REQUIRED AND CHOOSE THE APPROPRIATE CHART.

2. USING THE NOMINAL PANEL SIZE, AND THE PREDETERMINED ANCHORAGE TYPE, FIND THE REQUIRED ANCHORAGE QUANTITY.

3. INSTALL WITH THE ANCHOR CONDITIONS OF THE NOTES AND DETAILS OF SHEETS 13 & 14 OF 18.

Approved as complying with the Florida Building Code
Date 01/14/2008
NOA# 07-0905.04
Miami Dade Product Control Division
By Marcus Berg

| Revsd By: | Date: | Revisions: | |
|---|---|---|---|
| J.R. | 11/05/07 | A | A. Added notes |
| J.R. | 11/20/07 | B | B. No changes this sheet. |
| Revsd By: | Date: | Revisions: | |
| Drawn By: J.R. | Date: 8/01/07 | Checked By: | Date: |

1070 TECHNOLOGY DRIVE
NOKOMIS, FL 34275
P.O. BOX 1529
NOKOMIS, FL 34274

PGT Visibly Better

Description: ANCHOR QUANTITIES FOR 150 DP
Title: ALUM. SGD SERIES 3030, (SMALL MISSILE)

| Series/Model: | Scale: | Sheet: | Drawing No. | Rev: |
|---|---|---|---|---|
| SGD3030 | NTS | 17 of 18 | 3030-SM-165 | B |

11/26/09
Robert L. Clark, P.E.
PE #39712
Structural

**Anchor Quantity Required for a Max. Design Pressure (psf) of: +135.0 -135.0**

FOR THE JAMB, THE HEAD & SILL CLUSTER AND THE HEAD & SILL OUTSIDE OF THE CLUSTER

| Anchor Type and Substrate | | NOM. PANEL HEIGHT (IN) | | | | | | | | | | | | | | | | | | | |
|---|---|---|---|---|---|---|---|---|---|---|---|---|---|---|---|---|---|---|---|---|---|
| | | 80 | | | | 84 | | | | 96 | | | | 108 | | | | 120 | | | |
| NOM. PANEL WIDTH (IN) | FRAME SIDE | 1a, Concrete w/ Anchor Plate | 1b, Concrete | 2, Concrete w/ Anchor Plate | 3, Wood w/ Anchor Plate | 1a, Concrete w/ Anchor Plate | 1b, Concrete | 2, Concrete w/ Anchor Plate | 3, Wood w/ Anchor Plate | 1a, Concrete w/ Anchor Plate | 1b, Concrete | 2, Concrete w/ Anchor Plate | 3, Wood w/ Anchor Plate | 1a, Concrete w/ Anchor Plate | 1b, Concrete | 2, Concrete w/ Anchor Plate | 3, Wood w/ Anchor Plate | 1a, Concrete w/ Anchor Plate | 1b, Concrete | 2, Concrete w/ Anchor Plate | 3, Wood w/ Anchor Plate |
| 24 | Head & Sill | C2+4 | C8+4 | C4+4 | C4+4 | C4+4 | C8+4 | C4+4 | C4+4 | C4+4 | C10+4 | C4+4 | C6+4 | NOT AVAILABLE IN THESE SIZES | | | | | | | |
| | Jamb | 14 | 14 | 14 | 14 | 14 | 14 | 14 | 14 | 16 | 16 | 16 | 16 | | | | | | | | |
| 30 | Head & Sill | C4+4 | C10+4 | C4+4 | C4+4 | C4+4 | C10+4 | C4+4 | C6+4 | C4+4 | C12+4 | C6+4 | C6+4 | C4+4 | C12+4 | C6+4 | C6+4 | | | | |
| | Jamb | 14 | 14 | 14 | 14 | 14 | 14 | 14 | 14 | 16 | 16 | 16 | 16 | 18 | 18 | 18 | 18 | | | | |
| 36 | Head & Sill | C4+6 | C10+6 | C4+6 | C6+6 | C4+6 | C12+6 | C6+6 | C6+6 | C4+6 | C12+6 | C6+6 | C6+6 | C4+6 | C14+4 | C6+6 | C8+6 | C6+6 | C16+4 | C8+6 | C8+6 |
| | Jamb | 14 | 14 | 14 | 14 | 14 | 14 | 14 | 14 | 16 | 16 | 16 | 16 | 18 | 18 | 18 | 18 | 20 | 20 | 20 | 20 |
| 42 | Head & Sill | C4+6 | C12+6 | C6+6 | C6+6 | C4+6 | C12+6 | C6+6 | C6+6 | C4+6 | C14+6 | C6+6 | C8+6 | C6+6 | C16+6 | C8+6 | C8+6 | C6+6 | C18+6 | C8+6 | C10+6 |
| | Jamb | 14 | 14 | 14 | 14 | 14 | 14 | 14 | 14 | 16 | 16 | 16 | 16 | 18 | 18 | 18 | 18 | 20 | 20 | 20 | 20 |
| 48 | Head & Sill | C4+8 | C12+8 | C6+8 | C6+8 | C4+8 | C14+6 | C6+8 | C6+8 | C6+8 | C16+6 | C6+8 | C8+8 | C6+8 | C18+6 | C8+8 | C10+8 | C6+8 | C20+6 | C8+8 | C10+8 |
| | Jamb | 14 | 14 | 14 | 14 | 14 | 16 | 14 | 14 | 16 | 18 | 16 | 16 | 18 | 20 | 18 | 18 | 20 | 22 | 20 | 20 |
| 54 | Head & Sill | C4+8 | C14+8 | C6+8 | C6+8 | C4+8 | C14+8 | C6+8 | C8+8 | C6+8 | C16+8 | C8+8 | C8+8 | C6+8 | C20+8 | C8+8 | C10+8 | NOT AVAILABLE IN THESE SIZES | | | |
| | Jamb | 14 | 16 | 14 | 14 | 14 | 16 | 14 | 14 | 16 | 20 | 16 | 16 | 18 | 22 | 18 | 18 | | | | |
| 60 | Head & Sill | C4+10 | C14+8 | C6+10 | C8+10 | C4+10 | C14+8 | C6+10 | C8+10 | C6+10 | C18+8 | C8+10 | C8+10 | C6+10 | C20+8 | C10+10 | C10+10 | | | | |
| | Jamb | 14 | 18 | 14 | 14 | 14 | 18 | 14 | 14 | 16 | 22 | 16 | 16 | 18 | 24 | 18 | 18 | | | | |

***NOTE:***
FOR SMALL MISSILE APPLICATIONS ONLY

ANCHOR TYPES:
1a. 5/16" ELCO TAPCON WITH ANCHOR PLATE
1b. 5/16" ELCO TAPCON WITHOUT ANCHOR PLATE
2. 1/4" ELCO S.S. CRETEFLEX WITH ANCHOR PLATE
3. #14 WOOD SCREWS, INTO WOOD WITH ANCHOR PLATE

## TABLE KEY

TOTAL # OF ANCHORS THROUGH THE HEAD & SILL, TO THE LEFT AND RIGHT OF PANEL MEETING POINT

TOTAL # OF ANCHORS AT THE PANEL CENTER THROUGH THE HEAD & SILL (NOT INC. CORNER ANCHORAGE)

C8+10
18

TOTAL # OF ANCHORS THROUGH THE FULL LENGTH OF THE JAMB (INC. CORNER ANCHORAGE)

ANCHOR PLATE NOTES:
1. THE ANCHOR PLATE IS TO BE USED WHEN SPECIFIED BY THE CHART. ANCHOR CAPACITY IS CRUCIAL TO THE USE OF THE ANCHOR PLATE.

2. THE ANCHOR PLATE IS ONLY OPTIONAL WHEN USING 5/16" TAPCONS. GREATER ANCHOR QUANTITIES MUST BE USED, AS LISTED IN THE CHART.

INSTRUCTIONS ON USING THE ANCHORAGE TABLES:
1. DETERMINE THE DESIGN PRESSURE REQUIRED AND CHOOSE THE APPROPRIATE CHART.

2. USING THE NOMINAL PANEL SIZE, AND THE PREDETERMINED ANCHORAGE TYPE, FIND THE REQUIRED ANCHORAGE QUANTITY.

3. INSTALL WITH THE ANCHOR CONDITIONS OF THE NOTES AND DETAILS OF SHEETS 13 & 14 OF 18.

Approved as complying with the Florida Building Code
Date 02/14/2008
NOA# 07-0905.04
Miami Dade Product Control Division
By Maria Perez

| Revsd By: | Date: | Revisions: | |
|---|---|---|---|
| J.R. | 11/05/07 | A | A. Added notes |
| J.R. | 11/20/07 | B | B. No changes this sheet. |
| | | | |
| Drawn By: J.R. | Date: 8/01/07 | Checked By: | Date: |

1070 TECHNOLOGY DRIVE
NOKOMIS, FL 34275

P.O. BOX 1529
NOKOMIS, FL 34274

PGT Visibly Better

Description: ANCHOR QUANTITIES FOR 135 DP
Title: ALUM. SGD SERIES 3030, (SMALL MISSILE)

| Series/Model: | Scale: | Sheet: | Drawing No. | Rev: |
|---|---|---|---|---|
| SGD3030 | NTS | 18 of 18 | 3030-SM-165 | B |

11/20/07

Robert L. Clark, P.E.
PE #39712
Structural