MIAMI-DADE

BUILDING CODE COMPLIANCE OFFICE (BCCO)
PRODUCT CONTROL DIVISION

MIAMI-DADE COUNTY, FLORIDA
METRO-DADE FLAGLER BUILDING
140 WEST FLAGLER STREET, SUITE 1603
MIAMI, FLORIDA 33130-1563
(305) 375-2901 FAX (305) 375-2908

NOTICE OF ACCEPTANCE (NOA)

McElroy Metal, Inc.
1500 Hamilton Road
Boosier City, LA 71111

SCOPE:

This NOA is being issued under the applicable rules and regulations governing the use of construction materials. The documentation submitted has been reviewed by Miami-Dade County Product Control Division and accepted by the Board of Rules and Appeals (BORA) to be used in Miami Dade County and other areas where allowed by the Authority Having Jurisdiction (AHJ).

This NOA shall not be valid after the expiration date stated below. The Miami-Dade County Product Control Division (In Miami Dade County) and/or the AHJ (in areas other than Miami Dade County) reserve the right to have this product or material tested for quality assurance purposes. If this product or material fails to perform in the accepted manner, the manufacturer will incur the expense of such testing and the AHJ may immediately revoke, modify, or suspend the use of such product or material within their jurisdiction. BORA reserves the right to revoke this acceptance, if it is determined by Miami-Dade County Product Control Division that this product or material fails to meet the requirements of the applicable building code.

This product is approved as described herein, and has been designed to comply with the High Velocity Hurricane Zone of the Florida Building Code.

DESCRIPTION: Maxima 216 24Ga.

LABELING: Each unit shall bear a permanent label with the manufacturer's name or logo, city, state and following statement: "Miami-Dade County Product Control Approved", unless otherwise noted herein.

RENEWAL of this NOA shall be considered after a renewal application has been filed and there has been no change in the applicable building code negatively affecting the performance of this product.

TERMINATION of this NOA will occur after the expiration date or if there has been a revision or change in the materials, use, and/or manufacture of the product or process. Misuse of this NOA as an endorsement of any product, for sales, advertising or any other purposes shall automatically terminate this NOA. Failure to comply with any section of this NOA shall be cause for termination and removal of NOA.

ADVERTISEMENT: The NOA number preceded by the words Miami-Dade County, Florida, and followed by the expiration date may be displayed in advertising literature. If any portion of the NOA is displayed, then it shall be done in its entirety.

INSPECTION: A copy of this entire NOA shall be provided to the user by the manufacturer or its distributors and shall be available for inspection at the job site at the request of the Building Official.

This revises NOA #06-1128.05 and consists of pages 1 through 8.
The submitted documentation was reviewed by Alex Tigera.

ROOFING SYSTEM APPROVAL:

Category:	Roofing
Sub-Category:	Metal, Panels(Non-Structural)
Material:	Steel
Deck Type:	Wood, Steel
Maximum Design Pressure	**-101 psf**

TRADE NAMES OF PRODUCTS MANUFACTURED OR LABELED BY APPLICANT:

Product	Dimensions	Test Specifications	Product Description
Maxima 216 24Ga. Standing Seam Panel	l = various maximum w = 16" min. 24 gauge (0.022") (panels are cut to appropriate length)	TAS 110	Corrosion resistant, galvalume or galvanized, preformed, standing seam, coated, prefinished, metal panels.
Trim Pieces	l = varies w = varies min. 24 ga. (0.024")	TAS 110	Standard flashing and trim pieces. Manufactured for each panel width.
Panel Clips	22 gauge x 4-¼" wide x 2½"high	TAS 100	Corrosion resistant, formed, painted or unpainted steel clips for metal panel installation.

EVIDENCE SUBMITTED:

Test Agency	Test Identifier	Test Name/Report	Date
PRI Asphalt Technologies	VLS-001-02-02	ASTM G 26	04/30/04
PRI Asphalt Technologies	VLS-001-02-01	ASTM B 117	04/30/04
PRI Asphalt Technologies	MEMI-002-02-01 MEMI-001-02-01	TAS 100 TAS 100	08/15/06 07/21/06
Farabaugh Engineering and Testing, Inc.	T100-06 T103-06	TAS-125 TAS-125	08/15/06 08/15/06

APPROVED ASSEMBLIES

SYSTEM A:	Maxima 216 24ga. Panel
Deck Type:	Wood, Non-insulated
Deck Description:	$^{19}/_{32}$" or greater plywood or wood plank.
Slope Range:	2":12" or greater
Maximum Uplift Pressure:	**See Table A Below**

Deck Attachment: In accordance with applicable Building Code, but in no case shall it be less than 8d annular ring shank nails spaced 6" o.c. In reroofing, where the deck is less than $^{19}/_{32}$" thick (Minimum $^{15}/_{32}$"). The above attachment method must be in addition to existing attachment.

Underlayment: Minimum underlayment shall be a ASTM D 226 Type II installed with a minimum 4" side-laps and 6" end-laps. Underlayment shall be fastened with corrosion resistant tin-caps and 1¼" annular ring-shank nails, spaced 6" o.c. at all laps and two staggered rows 12" o.c. in the field of the roll. Or, any Miami-Dade County Product Control Approved underlayment having a current NOA.

Valleys: Valley construction shall be in compliance with Roofing Application Standard RAS 133 and with McElroy Metal Inc's current published installation instructions.

Fire Barrier Board: Any approved fire barrier having a current NOA. Or for class A or B fire rating, install minimum ¼" thick Georgia Pacific "Dens Deck" (with current NOA) or minimum 4mm thick of Tritex, RockRoof (with current NOA) or $^{5}/_{8}$" water resistant type X gypsum sheathing with treated core and facer.

Metal Panels and Accessories: Install the "Maxima 216 24ga. Panels" and accessories in compliance with McElroy Metal Inc's current, published installation instructions and details. Flashing, penetrations, valley construction and other details shall be constructed in compliance with the minimum requirements provided in Roofing Application Standards RAS 133.

1. Panels shall be installed with approved clips as shown in **Detail B** and shall be at a maximum spacing as listed below in **Table A**.
2. Clips are to be attached to substrate with (2) two corrosion resistant #14-10 screws in all roof areas. (i.e. field, perimeter and corner). Fasteners shall be of sufficient length to penetrate through the sheathing a minimum of $^{3}/_{16}$".
3. Seam panels with a mechanical seaming tool.

TABLE A
MAXIMUM DESIGN PRESSURE

	Field	Perimeter and Corner[1]
Maximum Design Pressure	**-67.2 psf.**	**-101 psf**
Maximum Fastener Spacing	**36" o.c.**	**12" o.c.**

1. Extrapolation shall not be allowed

SYSTEM B:	Maxima 216 24ga. Panel
Deck Type:	22 ga. steel
Deck Description:	Type B galvanized (G60) grade 33 steel deck shall be secured 6" o.c. to structural supports spaced a maximum of 5 ft on centers with screws.
Slope Range:	2":12" or greater
Maximum Uplift Pressure:	**See Table B Below**

Deck Attachment: In accordance with applicable building code, but in no case it shall be less than #12-14 x ¼ in. hex head, self drilling, self tapping screw spaced at 6" o.c.

Insulation: (Requires a bearing plate for clip attachment) Maximum 4" thick of an approved rigid board insulation with current NOA having a minimum 25psi compressive strength fastened with approved fasteners and plates. Fastening density shall be in compliance with applicable Building Code and Roofing Application Standard RAS 117.

Underlayment: One or more layers of Product Control Approved self-adhered underlayment with a 4" overlap fully adhered to the fire barrier.

Valleys: Valley construction shall be in compliance with Roofing Application Standard RAS 133 and with McElroy Metal Inc's current published installation instructions.

Fire Barrier Board: Any approved fire barrier having a current NOA. Or for class A or B fire rating, install minimum ¼" thick Georgia Pacific "Dens Deck" (with current NOA) or minimum 4mm thick of Tritex, RockRoof (with current NOA) or $^5/_8$" water resistant type X gypsum sheathing with treated core and facer.

Metal Panels and Accessories: Install the "Maxima 216 24ga. Panels" and accessories in compliance with McElroy Metal Inc's current, published installation instructions and details. Flashing, penetrations, valley construction and other details shall be constructed in compliance with the minimum requirements provided in Roofing Application Standards RAS 133.

1. Panels shall be installed with approved clips as per **Detail C** and shall be at a maximum spacing as listed below in **Table B**.
2. Clips are to be attached to substrate with (2) two corrosion resistant #12-13 self drilling screws in all roof areas with a 4" x 6" x 16"ga metal bearing plate under each clip. (i.e. field, perimeter and corner). Fasteners shall be of sufficient length to penetrate through the sheathing a minimum of $^3/_{16}$".
3. Seam panels with a mechanical seaming tool.

TABLE B
MAXIMUM DESIGN PRESSURE

	Field	Perimeter and Corner[1]
Maximum Design Pressure	**-71 psf.**	**-93.5 psf**
Maximum Fastener Spacing	**36" o.c.**	**12" o.c.**

1. Extrapolation shall not be allowed

SYSTEM LIMITATIONS:

1. Fire classification is not part of this acceptance; refer to a current Approved Roofing Materials Directory for fire ratings of this product.

2. The maximum designed pressure limitation listed shall be applicable to all roof pressure zones (i.e. field, perimeters, and corners). Neither rational analysis, nor extrapolation shall be permitted for enhanced fastening at enhanced pressure zones (i.e. perimeters, extended corners and corners). The maximum fastener spacing noted in the "Systems Description" section of this approval shall not be exceeded.

3. All panels and clips shall be permanently labeled with the manufacturer's name or logo, city, state and the following statement: "Miami Dade County Product Control Approved".

4. All products listed herein shall have a quality assurance audit in accordance with the Florida Building Code and Rule 9B-72 of the Florida Administrative Code.

PROFILE DRAWINGS

DETAIL A

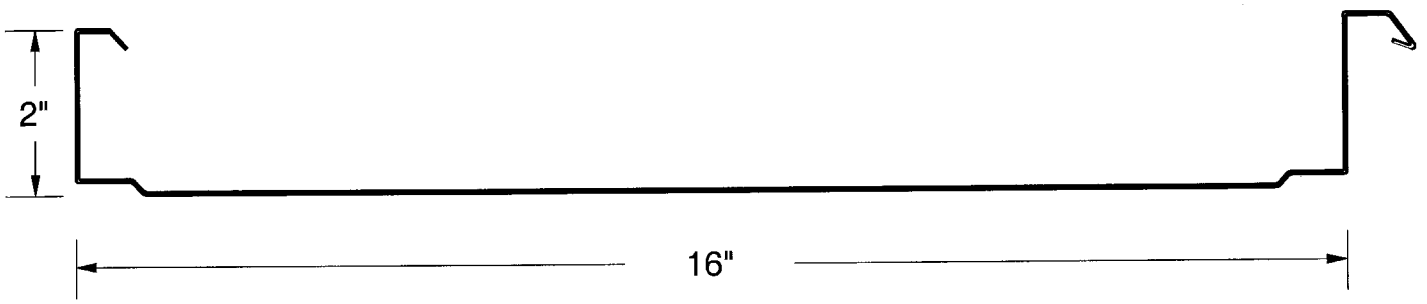

MAXIMA 216 24 GA. PANEL
(N.T.S.)

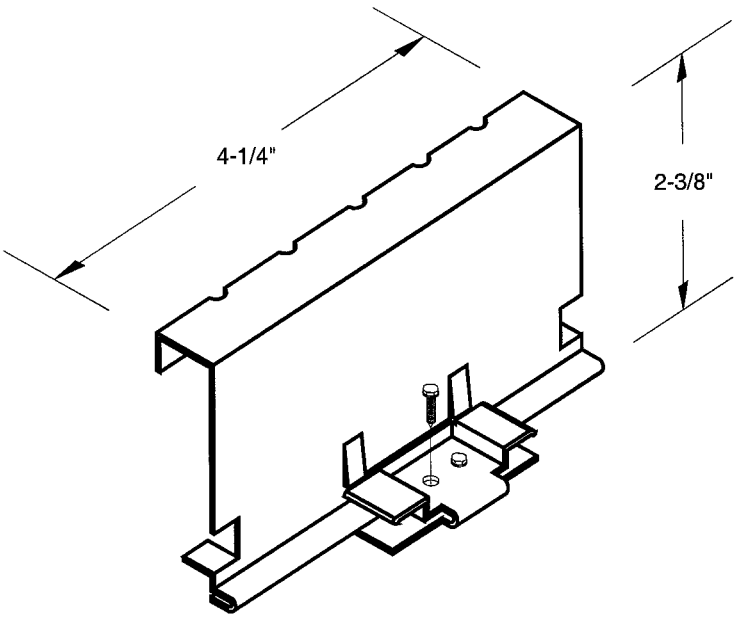

PANEL CLIP
(N.T.S.)

DETAIL B

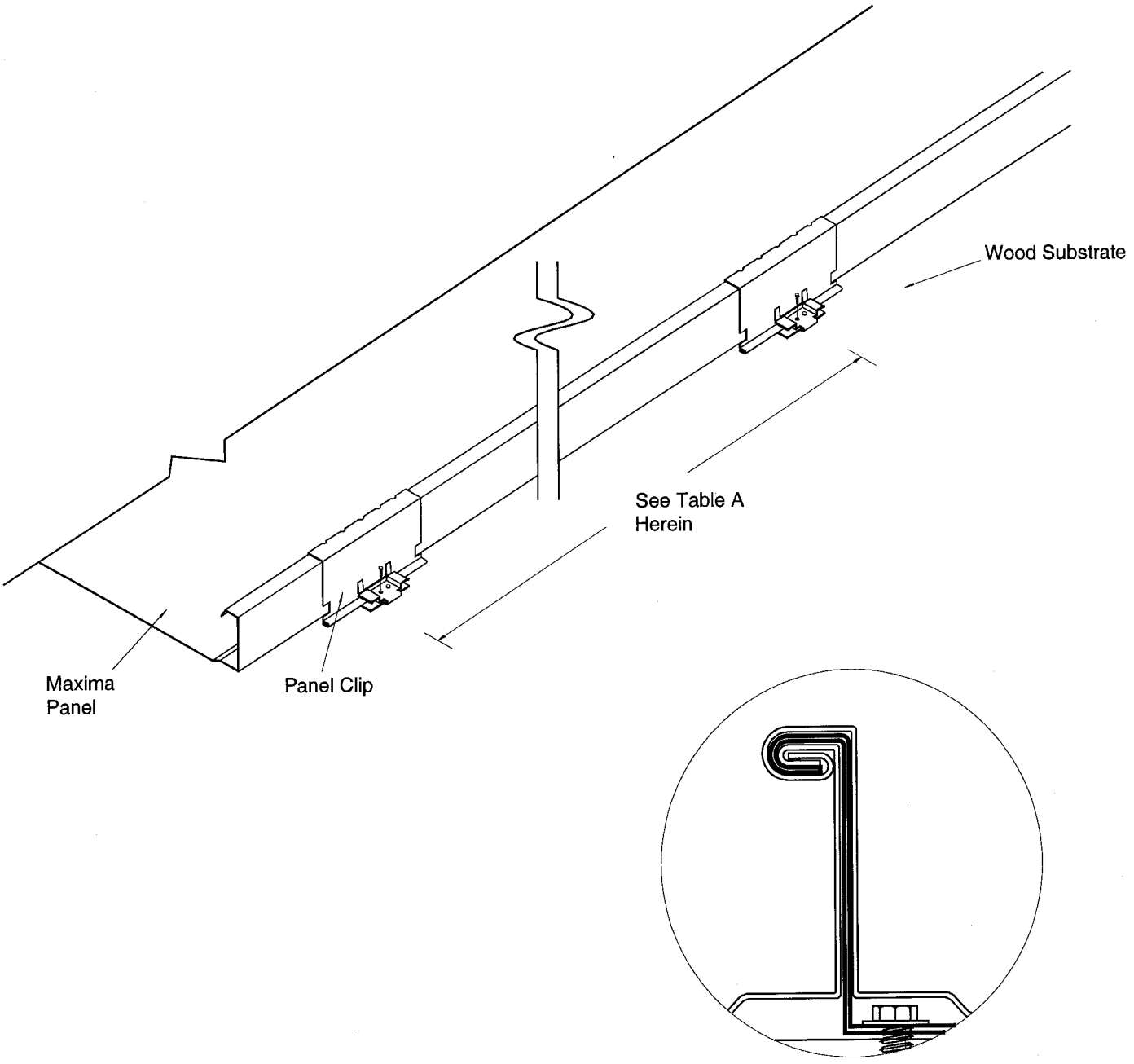

SYSTEM A AND SEAM DETAIL
(N.T.S.)

DETAIL C

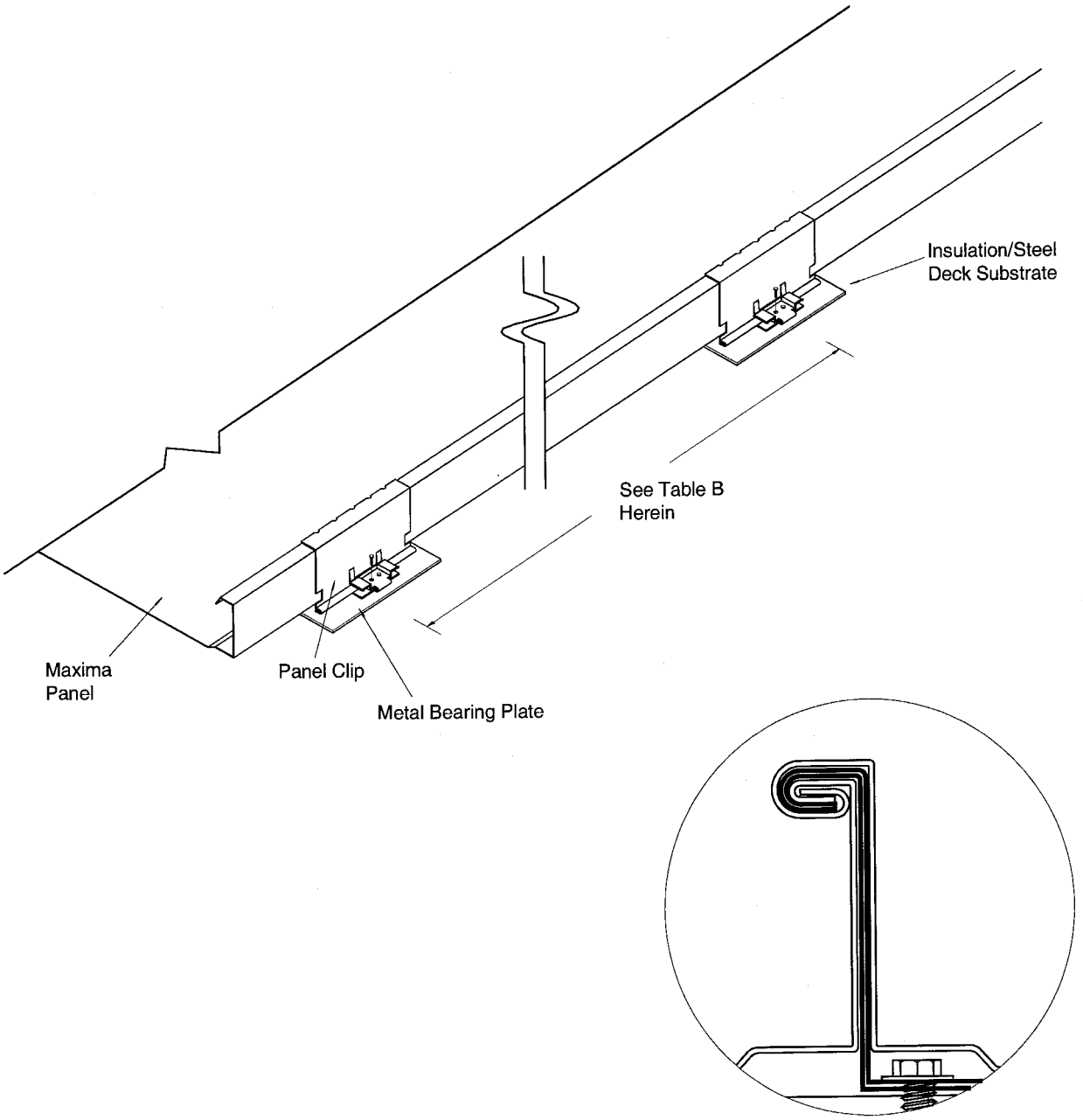

SYSTEM B AND SEAM DETAIL
(N.T.S.)

END OF THIS ACCEPTANCE