MIAMI-DADE COUNTY

BUILDING CODE COMPLIANCE OFFICE (BCCO)
PRODUCT CONTROL DIVISION

MIAMI-DADE COUNTY, FLORIDA
METRO-DADE FLAGLER BUILDING
140 WEST FLAGLER STREET, SUITE 1603
MIAMI, FLORIDA 33130-1563
(305) 375-2901 FAX (305) 372-6339
www.miamidade.gov/buildingcode

NOTICE OF ACCEPTANCE (NOA)

Sabana Mahogany, LLC
6157 NW 167th Street Unit F-25
Miami, FL 33015

SCOPE:

This NOA is being issued under the applicable rules and regulations governing the use of construction materials. The documentation submitted has been reviewed by Miami-Dade County Product Control Division and accepted by the Board of Rules and Appeals (BORA) to be used in Miami Dade County and other areas where allowed by the Authority Having Jurisdiction (AHJ).

This NOA shall not be valid after the expiration date stated below. The Miami-Dade County Product Control Division (In Miami Dade County) and/or the AHJ (in areas other than Miami Dade County) reserve the right to have this product or material tested for quality assurance purposes. If this product or material fails to perform in the accepted manner, the manufacturer will incur the expense of such testing and the AHJ may immediately revoke, modify, or suspend the use of such product or material within their jurisdiction. BORA reserves the right to revoke this acceptance, if it is determined by Miami-Dade County Product Control Division that this product or material fails to meet the requirements of the applicable building code.

This product is approved as described herein, and has been designed to comply with the Florida Building Code, including the High Velocity Hurricane Zone.

DESCRIPTION: Series "Mahogany Impact" Outswing Wood Casement Window – L. M. I.

APPROVAL DOCUMENT: Drawing No. **07-230**, titled "Mahogany Impact Casement Window", sheets 1 through 11 of 11, dated August 20, 2007, prepared by EngCo, Inc., signed and sealed by Pedro De Figueiredo, P.E., bearing the Miami-Dade County Product Control Renewal stamp with the Notice of Acceptance number and expiration date by the Miami-Dade County Product Control Division.

MISSILE IMPACT RATING: Large and Small Missile Impact Resistant

LABELING: Each unit shall bear a permanent label with the manufacturer's name or logo, city, state and following statement: "Miami-Dade County Product Control Approved", unless otherwise noted herein.

REVISION of this NOA shall be considered after a revision application has been filed and there has been no change in the applicable building code negatively affecting the performance of this product.

TERMINATION of this NOA will occur after the expiration date or if there has been a revision or change in the materials, use, and/or manufacture of the product or process. Misuse of this NOA as an endorsement of any product, for sales, advertising or any other purposes shall automatically terminate this NOA. Failure to comply with any section of this NOA shall be cause for termination and removal of NOA.

ADVERTISEMENT: The NOA number preceded by the words Miami-Dade County, Florida, and followed by the expiration date may be displayed in advertising literature. If any portion of the NOA is displayed, then it shall be done in its entirety.

INSPECTION: A copy of this entire NOA shall be provided to the user by the manufacturer or its distributors and shall be available for inspection at the job site at the request of the Building Official.
This NOA **renews NOA # 05-1006.02** and consists of this page 1and evidence pages E-1 and E-2, as well as approval document mentioned above.
The submitted documentation was reviewed by **Jaime D. Gascon, P.E.**

PRODUCT CONTROL ACCEPTED

J. Gascon
9/28/07

Sabana Mahogany, LLC

NOTICE OF ACCEPTANCE: EVIDENCE SUBMITTED

A. DRAWINGS

1. Manufacturer's parts and section drawings.
2. Drawing No. **07-230**, titled "Mahogany Impact Casement Window", sheets 1 through 11 of 11, dated August 20, 2007, prepared by EngCo, Inc., signed and sealed by Pedro De Figueiredo, P.E.

B. TESTS

1. Test reports on 1) Large Missile Impact Test, FBC, TAS 201-94
   2) Cyclic Loading Test, per FBC, TAS 203-94
   along with installation diagram of a pair of Ellipse Top Outswing French Wood Doors/Windows (6' x 8') marked-up by Hurricane Engineering & Testing, Inc., Test Report No. **HETI-99-799A**, dated 03/04/99, signed and sealed by Hector M. Medina, P. E.
   "Submitted under NOA# 05-1006.02"
2. Test reports on 1) Large Missile Impact Test, FBC, TAS 201-94
   2) Cyclic Loading Test, per FBC, TAS 203-94
   along with installation diagram of a pair of Arch Top Outswing French Wood Doors/Windows (6' x 8') marked-up by Hurricane Engineering & Testing, Inc., Test Report No. **HETI-99-799B**, dated 03/04/99, signed and sealed by Hector M. Medina, P. E.
   "Submitted under NOA# 05-1006.02"
3. Test reports on 1) Large Missile Impact Test, FBC, TAS 201-94
   2) Cyclic Loading Test, per FBC, TAS 203-94
   along with installation diagram of a pair of Square Top Outswing French Wood Doors/Windows (6' x 8') marked-up by Hurricane Engineering & Testing, Inc., Test Report No. **HETI-99-799C**, dated 03/04/99, signed and sealed by Hector M. Medina, P. E.
   "Submitted under NOA# 05-1006.02"
4. Test reports on 1) Large Missile Impact Test, FBC, TAS 201-94
   2) Cyclic Loading Test, per FBC, TAS 203-94
   along with installation diagram of a pair of Square Top Outswing Raised Panel Wood Door/Windows (6' x 10') marked-up by Hurricane Engineering & Testing, Inc., Test Report No. **HETI-99-799D**, dated 03/04/99, signed and sealed by Hector M. Medina, P. E.
   "Submitted under NOA# 05-1006.02"
5. Test reports on 1) Air Infiltration Test, per FBC, TAS 202-94
   2) Uniform Load Static Air Pressure Test, per FBC, TAS 202-94
   3) Water Resistance Test, per FBC, TAS 202-94
   4) Forced Entry Resistance Test, per FBC, TAS 202-94
   along with installation diagram of a pair of Square Top Outswing French Wood Doors/Windows (6' x 8') marked-up by Hurricane Engineering & Testing, Inc., Test Report No. **HETI-99-1136**, dated 03/08/99, signed and sealed by Hector M. Medina, P. E.
   "Submitted under NOA# 05-1006.02"

Jaime D. Gascon, P.E.
Chief, Product Control Division
NOA No 07-0912.02
Expiration Date: October 07, 2008
Approval Date: October 19, 2007

NOTICE OF ACCEPTANCE: EVIDENCE SUBMITTED

6. Test reports on 1) Air Infiltration Test, per FBC, TAS 202-94
2) Uniform Load Static Air Pressure Test, per FBC, TAS 202-94
3) Water Resistance Test, per FBC, TAS 202-94
4) Forced Entry Resistance Test, per FBC, TAS 202-94.
along with installation diagram of a pair of Square Top Outswing Raised Panel Wood Door /Window (6' x 10') marked-up by Hurricane Engineering & Testing, Inc., Test Report No. **HETI-99-1137**, dated 03/16/99, signed and sealed by Hector M. Medina, P. E.
"Submitted under NOA# 05-1006.02"

7. Test reports on 1) Air Infiltration Test, per FBC, TAS 202-94
2) Uniform Load Static Air Pressure Test, per FBC,TAS 202-94
3) Water Resistance Test, per FBC, TAS 202-94
4) Forced Entry Resistance Test, per FBC, TAS 202-94.
along with installation diagram of a pair of Double Arch French Wood Doors/Windows (75-1/2" w x 120" h) marked-up by Hurricane Engineering & Testing, Inc., Test Report No. **HETI-03-1343**, dated 10/21/03, signed and sealed by Rafael E. Droz-Seda, P. E.
"Submitted under NOA# 05-1006.02"

8. Test reports on 1) Large Missile Impact Test, FBC, TAS 201-94
2) Cyclic Loading Test, per FBC, TAS 203-94
along with installation diagram of a pair of Double Arch French Wood Doors/Windows (75-1/2" w x 120" h) marked-up by Hurricane Engineering & Testing, Inc., Test Report No. **HETI-03-1846**, dated 10/21/03, signed and sealed by Rafael E. Droz-Seda, P. E.
"Submitted under NOA# 05-1006.02"

C. CALCULATIONS

1. Revised Anchor Calculations and Structural analysis, complying with FBC 2004, dated 05/28/99, prepared by ENGCO Engineering Services, signed and sealed by Pedro De Figueiredo, P.E. **Complies with ASTM E 1300-98**
"Submitted under NOA# 05-1006.02"

D. QUALITY ASSURANCE BY

1. Miami-Dade Building Code Compliance Office (BCCO).

E. MATERIAL CERTIFICATIONS

1. Notice of Acceptance **No. 03-0916.02**, to Nebula Glass International, Inc. for their "Glasslam Safety-Plus Laminated Glass" approved on 10/23/03 and expiring on 09/09/08.

F. STATEMENTS

1. None

G. OTHER

1. Notice of Acceptance No. **05-1006.02**, issued to Sabana Windows, Inc. for their Outswing Wood Casement Window Impact Resistant, approved on May 11, 2006 and expiring on October 07, 2007.

Jaime D. Gascon, P.E.
Chief, Product Control Division
NOA No 07-0912.02
Expiration Date: October 07, 2008
Approval Date: October 19, 2007

INDEX:

SHEET 1 of 11 - GENERAL NOTES & MODEL TYPES
SHEET 2 of 11 - MODEL A ELEVATIONS
SHEET 3 of 11 - MODEL A DETAILS
SHEET 4 of 11 - MODEL B ELEVATIONS
SHEET 5 of 11 - MODEL B DETAILS
SHEET 6 of 11 - MODEL C ELEVATIONS
SHEET 7 of 11 - MODEL C DETAILS
SHEET 8 of 11 - MODEL D ELEVATIONS
SHEET 9 of 11 - MODEL D DETAILS
SHEET 10 of 11 - MODEL E ELEVATIONS
SHEET 11 of 11 - MODEL E DETAILS

GENERAL NOTES:

1- CODE: THIS PRODUCT HAS BEEN TESTED AND DESIGNED IN ACCORDANCE WITH THE FLORIDA BUILDING CODE 2004 EDITION - (INCLUDING THE HIGH VELOCITY HURRICANE ZONE - HVHZ).

2- DEFINITION: THIS PRODUCT IS A CASEMENT MAHOGANY WOOD TYPE WINDOW WITH LARGE AND SMALL MISSILE IMPACT RESISTANCE.

3- POSTING:
'MAHOGANY IMPACT CASEMENT WINDOW
LARGE & SMALL MISSILE IMPACT RESISTANT
SABANA MAHOGANY, LLC.
MIAMI LAKES - FLORIDA
DADE COUNTY PRODUCT CONTROL APPROVED'

4- DESIGN LOADS: LOADS MUST BE CALCULATED BY A PROFESSIONAL ARCHITECT OR ENGINEER FOR EACH SPECIFIC PROJECT. THE CALCULATED DESIGNED PRESSURE MUST NOT EXCEED THE ALLOWABLE APPROVED PRESSURE.

5- MATERIAL: ALL WOOD PARTS TO BE SOLID OR LAMINATED MAHOGANY AND GLAZING TO BE LAMINATED IMPACT RESISTANT GLASS AS SPECIFIED ON THIS APPROVAL.

6- FASTENERS: ASSEMBLY SCREWS AND ANCHORS SHALL BE AS SPECIFIED IN THIS CURRENT SET OF DRAWINGS.

7- USE: IT SHALL BE THE RESPONSIBILITY OF THE CONTRACTOR, ARCHITECT OR ENGINEER OF RECORD TO VERIFY THE FOLLOWING:
7.1- THE STABILITY OF THE STRUCTURE WHERE THE UNIT IS TO BE ATTACHED INSURING PROPER ANCHORAGE.
7.2- THE SITE SPECIFIC PROJECT CRITERIA, SUCH AS BUT NOT LIMITED TO, LOCAL CODE REQUIREMENTS, DESIGNED PRESSURES ETC.
7.3- THAT THIS APPROVAL IS ADEQUATE TO THE SPECIFIC PROJECT.

8- 33 1/3% INCREASE IN ALLOWABLE LOADS HAVE NOT BEEN USED IN THE DESIGN OF THE ANCHORS FOR THIS PRODUCT APPROVAL, EXCEPT WOOD SCREWS WITH 1.6 INCREASE FOR WIND LOAD DURATION HAVE BEEN USED.

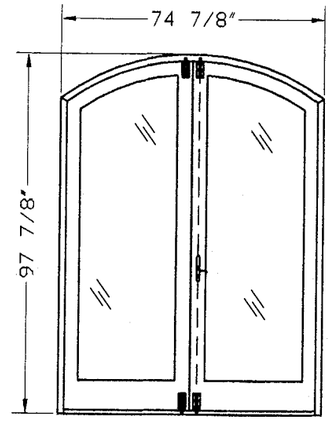

MODEL A
8 FEET ELLIPSE FRENCH CASEMENT WINDOW
DESIGNED LOADS = +53 PSF, -70 PSF
FOR MODEL A DETAILS REFER TO:
SHEET 2 AND 3 OF 11

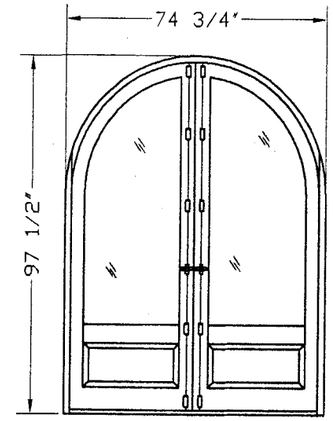

MODEL B
8 FEET FULL ARCHED FRENCH CASEMENT WINDOW
DESIGNED LOADS = +53 PSF, -70 PSF
FOR MODEL B DETAILS REFER TO:
SHEET 4 AND 5 OF 11

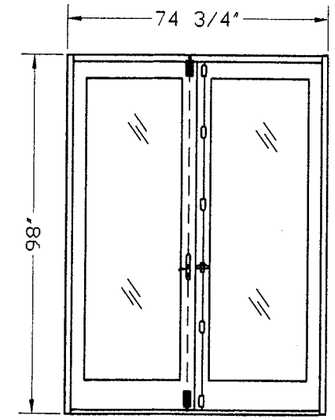

MODEL C
8 FEET SQUARE CASEMENT WINDOW
DESIGNED LOADS = +53 PSF, -70 PSF
FOR MODEL C DETAILS REFER TO:
SHEET 6 AND 7 OF 11

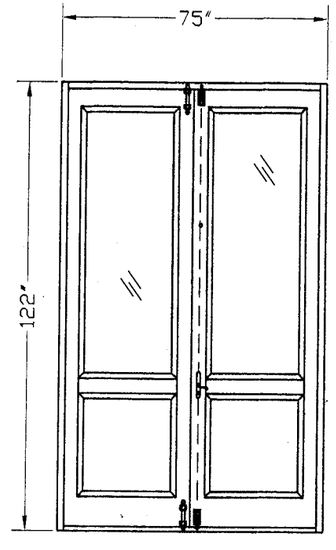

MODEL D
10 FEET SQUARE PANEL CASEMENT WINDOW
DESIGNED LOADS = +53 PSF, -70 PSF
FOR MODEL D DETAILS REFER TO:
SHEET 8 AND 9 OF 11

SINGLE WINDOWS ARE QUALIFIED UNDER THIS PRODUCT APPROVAL LIMITED BY THE ACTIVE WINDOW LEAF SPECIFICATIONS

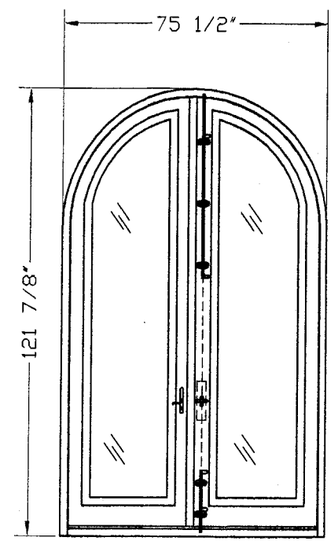

MODEL E
10 FEET FULL ARCHED FRENCH CASEMENT WINDOW
DESIGNED LOADS = +75 PSF, -83 PSF
FOR MODEL E DETAILS REFER TO:
SHEET 10 AND 11 OF 11

MANUFACTURER:
Sabana Mahogany, LLC
6157 NW 167th STREET
UNIT F-25
MIAMI LAKES, FLORIDA 33015
PH.: (305) 825-1256
FAX: (305) 825-3805

PRODUCT:
Mahogany Impact Casement Window

Engineering:
EngCo Inc.
CA 8116
6971 W. Sunrise Blvd. 104
Plantation, Fl. 33313
Tel.: (954) 585-0304
Fax: (954) 585-0305

AUG 23 2007

Engineer Seal
Pedro De Figueiredo
PE 52609

Date: 8/20/07
Scale: NA
Design by: PPMF

Miami Dade Office:

PRODUCT RENEWED
as complying with the Florida Building Code
Acceptance No 07-0912.02
Expiration Date 10/07/2008
By
Miami Dade Product Control Division

Drawing Number
07-230

MODEL A - ELLIPSE SWING WINDOW
DESIGNED LOADS = +53 PSF, -70 PSF

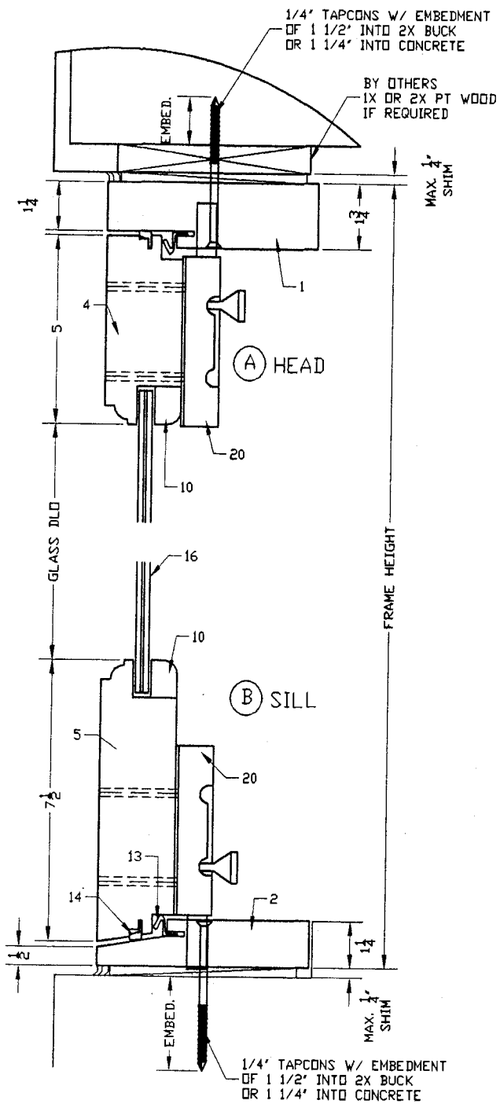

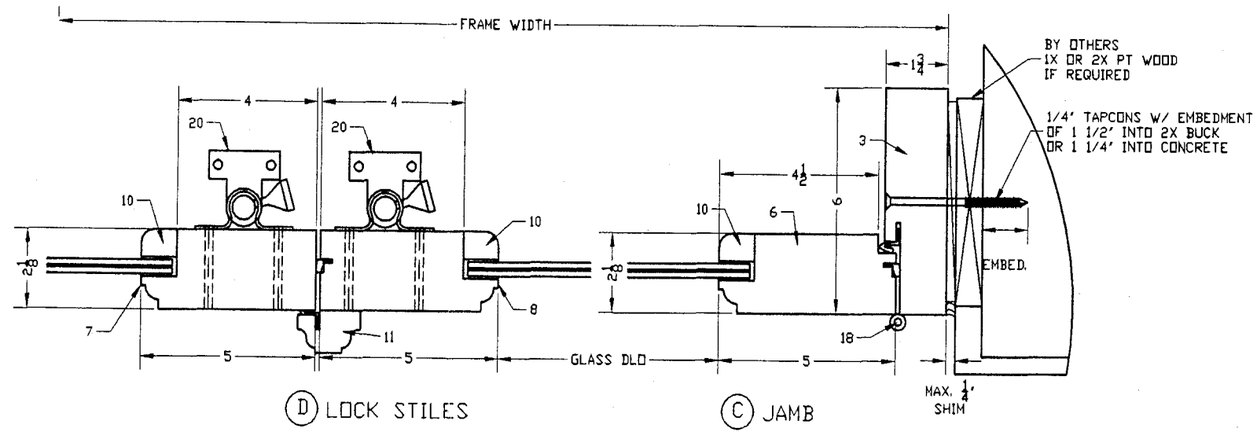

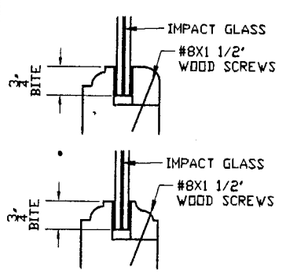

GLASS DESCRIPTION:

1- GLASSLAM SAFETY PLUS I
(1) 3/16' ANNEALED GLASS SHEET +
(1) .063' RESIN BY GLASSLAM +
(1) .010' SAFETY-PLUS POLYESTER INTERLAYER +
(1) .063' RESIN BY GLASSLAM +
(1) 3/16' ANNEALED GLASS SHEET

2- GLAZING METHOD:
GLASS GLAZED WITH SILICONE DOW CORNING #995 0.9 X .051 THICK OVER A 3/4' GLASS BITE.
1 X 3/4' WOOD BEAD WAS CONNECTED TO THE RAILS & STILES WITH #8X 1 1/2' WOOD SCREWS AT 5'OC

FRAME & PANEL GENERAL NOTES

1- FRAME ASSEMBLY NOTES:
EACH SOLID MAHOGANY WOOD FRAME HEAD, SILL & JAMBS ARE 6' DEEP AND THE CORNERS ARE BUTT JOINED WITH WOOD GLUE AND FASTENED WITH (4) #14X3' WOOD SCREWS IN EACH CORNER.

2- PANEL ASSEMBLY NOTES:
EACH SOLID MAHOGANY WOOD STILE & RAIL IS 2 1/8' DEEP AND THE CORNERS, 1/2'thick x3'x3' TENON AND WOOD GLUE JOINT.

3- INSTALLATION SEALANT NOTES:
THE FRAME AND ALL EXPOSED INSTALLATION FASTENERS MUST BE PROPERLY SEALED WITH 'GE' STOCK GE012A SILICONE.

MANUFACTURER:
Sabana Mahogany, LLC
6157 NW 167th STREET
UNIT F-25
MIAMI LAKES, FLORIDA 33015
PH. : (305) 825-1256
FAX: (305) 825-3805

PRODUCT:
Mahogany Impact Casement Window

Engineering:
EngCo Inc.
CA 8116
6971 W. Sunrise Blvd. 104
Plantation, Fl. 33313
Tel.: (954) 585-0304
Fax: (954) 585-0305

AUG 23 2007

Engineer Seal
Pedro De Figueiredo
PE 52609

Date: 8/20/07
Scale: NA
Design by: PPMF

Miami Dade Office:

PRODUCT RENEWED
as complying with the Florida Building Code
Acceptance No 07-0912.02
Expiration Date 10/07/2008
By
Miami Dade Product Control Division

Drawing Number
07-230

OUTSIDE ELEVATION

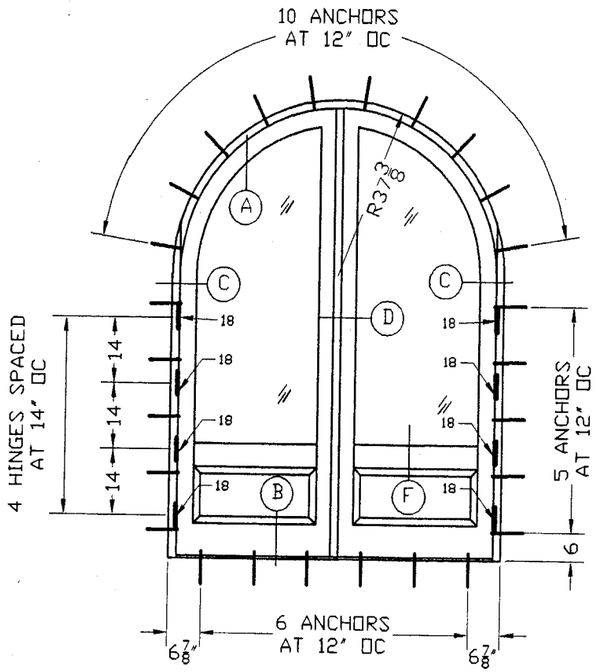

INSIDE ELEVATION

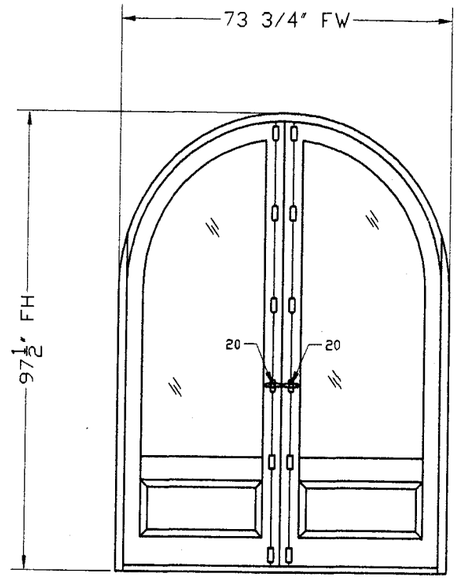

MODEL B - FULL ARCHED
CASEMENT WINDOW
DESIGNED LOADS = +53 PSF, -70 PSF

MAX. FRAME SIZE = 73 3/4" X 97 1/2" X 6" DEEP FRAME
MAX. PANEL SIZE = 36 5/16" X 95 7/16" X 2 1/8" DEEP
MAX. GLASS SIZE = 27 1/4" X 84 1/4 X .511" THICK
MAX. GLASS DLO = 25 3/4" X 82 3/4"
WATER TEST PRESSURE: ±8 PSF (53.33 DP)

INSTALLATION NOTES:
1- ANCHOR: 1/4" TAPCON BY ELCO

SUBSTRATUM	EMBEDMENT
WOOD (SG>=.55)	1 1/2"
CONCRETE (3320 psi)	1 1/4"
MASONRY BLOCK	1 1/4"

2- QUANTITY & SPACING AS PER ELEVATION
3- 1X OR 2X WOOD BUCK TO BE DESIGNED BY OTHERS FOR IMPOSED LOADS.

SEE SHEET 5 OF 11 FOR DETAILS

BILL OF MATERIALS

ITEM#	DESCRIPTION	SIZE	MATERIAL & REMARKS
1	FRAME HEADER	1.75" x 6.00" x 1.50"	MAHOGANY WOOD
2	FRAME SILL	1.25" x 6.00" x 0.50"	MAHOGANY WOOD
3	FRAME JAMB	1.75" x 6.00" x 1.25"	MAHOGANY WOOD
4	PANEL TOP RAIL	2.13" x 5.00" x 3.25"	MAHOGANY WOOD
5	PANEL BOTTOM RAIL	2.13" x 7.50" x 6.13"	MAHOGANY WOOD
6	PANEL HINGE STILE	2.13" x 5.00" x 3.38"	MAHOGANY WOOD
7	PANEL LOCK STILE	2.13" x 5.00" x 4.13"	MAHOGANY
8	RAISED PANEL HOR. STILE	2.13" x 6.00" x 5.00"	MAHOGANY
9	MAHOGANY WOOD BEAD	1.00" x 0.75"	Attached w/ #8x 1 1/2" wd screws
10	MAHOGANY WOOD BEAD	0.75" x 1.00"	Attached w/ #8x 1 1/2" wd screws
11	MAHOGANY WOOD ASTRAGAL	1.13" x 1.75"	Attached w/ #10x 2" wd screws at 12"oc
12	CLOSED CELL FOAM STRIP	0.5" x .625"	FOAM TAPE FULL LENGTH OF SILL
13	Q'LON SEAL @ FRAME/PANELS	.58" x 0.65"	SCHLEGEL #QDS-650
14	Q'LON SEAL @ PANELS RAILS	.335" x .336"	SCHLEGEL #QEZ320
15	WOOD RAISED PANEL	1.50"	SOLID PINE
16	1/2" LAMINATED GLASS	.511" THICK	GLASSLAM
17	GLAZING CLEAR SILICONE	.90x.051	DOW CORNING 995

HARDWARE SCHEDULE

HINGES (18):
(4 HINGES/JAMB) 2 3/4"w X 4" h X .068" HINGES @ 14" OC CONNECTED TO PANEL AND FRAME W/ (8) #10X 1 1/2" WS

ACTIVE & INACTIVE STILE:
(20) CENTER HANDLE ROUSTIQUE ARTICLE CODE 042100 MODEL RY 59 FASTENED W/ (4) #10X 1 1/4"
(7) 2.4" X 1.656" CLASSIC GUIDES (STEEL) W/ (2) #10X 1 1/4" EXCEPT TOP AND BOTTOM HAD (2) 1/8"X3" MS W/ DOUBLE NUTS. THE STRIKE PLATE WAS 1/4" THICK STEEL.
1/2" LOCKING THROW WAS A .625" DIAM SEMI-TUBE X.154"X35" LONG AT BOTTOM AND 57.5" LONG AT TOP. ALSO, THE TOP AND BOTTOM ENDS (3") WERE FILLED WITH A WELDED 1/8" WIDE STEEL PLATE.

MANUFACTURER:
Sabana Mahogany, LLC
6157 NW 167th STREET
UNIT F-25
MIAMI LAKES, FLORIDA 33015
PH.: (305) 825-1256
FAX: (305) 825-3805

PRODUCT:
Mahogany Impact Casement Window

Engineering:
EngCo Inc.
CA 8116
6971 W. Sunrise Blvd. 104
Plantation, Fl. 33313
Tel.: (954) 585-0304
Fax: (954) 585-0305

AUG 23 2007

Engineer Seal
Pedro De Figueiredo
PE 52609

Date: 8/20/07
Scale: NA
Design by: PPMF

Miami Dade Office:
Accepted 07-0912.02
Expiration 10/07/2008
By
Miami Dade Product Control Division

Drawing Number
07-230

MODEL B - FULL ARCHED CASEMENT WINDOW
DESIGNED LOADS = +53 PSF, -70 PSF

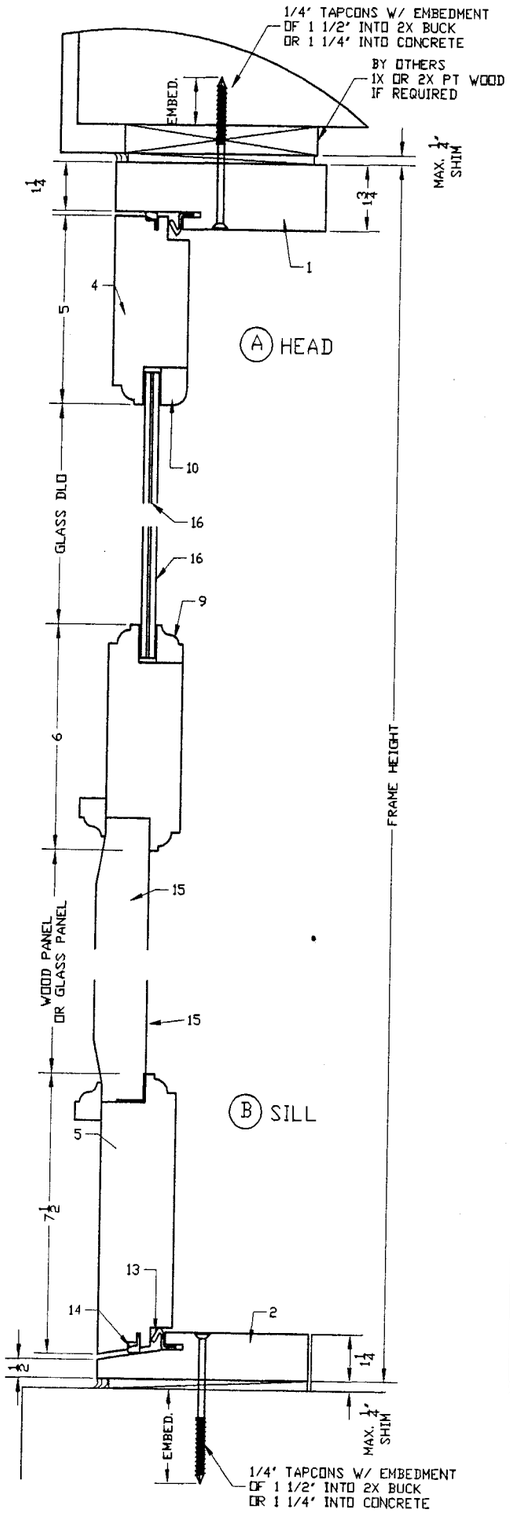

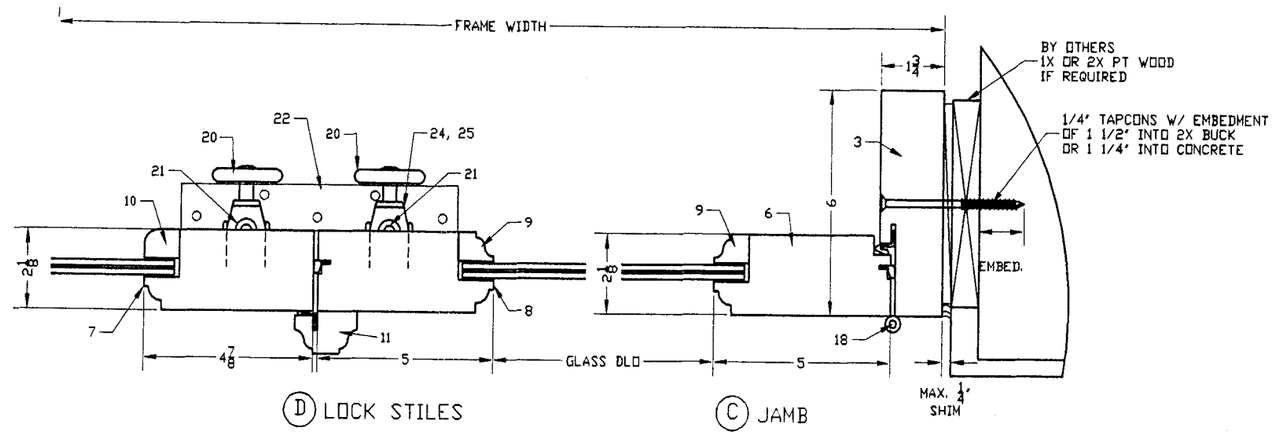

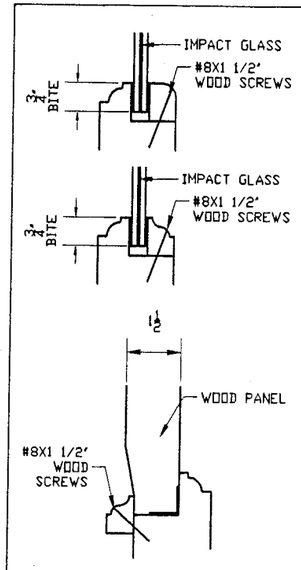

GLASS DESCRIPTION:

1- GLASSLAM SAFETY PLUS I
(1) 3/16' ANNEALED GLASS SHEET +
(1) .063' RESIN BY GLASSLAM +
(1) .010' SAFETY-PLUS POLYESTER INTERLAYER +
(1) .063' RESIN BY GLASSLAM +
(1) 3/16' ANNEALED GLASS SHEET

2- GLAZING METHOD:
GLASS GLAZED WITH SILICONE DOW CORNING #995 0.9 X .051 THICK OVER A 3/4' GLASS BITE.
1 X 3/4' WOOD BEAD WAS CONNECTED TO THE RAILS & STILES WITH #8X 1 1/2' WOOD SCREWS AT 5'OC

3- WOOD PANELS DESCRIPTION:
1 1/2' THICK SOLID PINE WOOD PANEL PLACED IN A 3/4' X 1 1/4' BEDDING IN RAILS AND STILES AND A 3/4' X 3/4' X 1/2' X .051' THICK CONTINUOUS GE WINDOW & WINDOW STOCK # GE012A CLEAR SILICONE BEAD. A 1/2 X 13/16 WOOD MOULDING CONNECTED WITH #8X1 1/2' WOOD SCREWS SPACED AT 9'OC.

FRAME & PANEL GENERAL NOTES

1- FRAME ASSEMBLY NOTES:
EACH SOLID MAHOGANY WOOD FRAME HEAD, SILL & JAMBS ARE 6' DEEP AND THE CORNERS ARE BUTT JOINED WITH WOOD GLUE AND FASTENED WITH (4) #14X3' WOOD SCREWS IN EACH CORNER.

2- PANEL ASSEMBLY NOTES:
EACH SOLID MAHOGANY WOOD STILE & RAIL IS 2 1/8' DEEP AND THE CORNERS, 1/2' thick x3'x3' TENON AND WOOD GLUE JOINT.

3- INSTALLATION SEALANT NOTES:
THE FRAME AND ALL EXPOSED INSTALLATION FASTENERS MUST BE PROPERLY SEALED WITH 'GE' STOCK GE012A SILICONE.

MANUFACTURER:
Sabana Mahogany, LLC
6157 NW 167th STREET
UNIT F-25
MIAMI LAKES, FLORIDA 33015
PH.: (305) 825-1256
FAX: (305) 825-3805

PRODUCT:
Mahogany Impact Casement Window

Engineering:
EngCo Inc.
CA 8116
6971 W. Sunrise Blvd. 104
Plantation, Fl. 33313
Tel.: (954) 585-0304
Fax: (954) 585-0305

AUG 2 3 2007

Engineer Seal
Pedro De Figueiredo
PE 52609

Date: 8/20/07
Scale: NA
Design by: PPMF

Miami Dade Office:

PRODUCT RENEWED
as complying with the Florida Building Code
Acceptance No 07-0912.02
Expiration Date 10/07/2008
By
Miami-Dade Product Control Division

Drawing Number
07-230

OUTSIDE ELEVATION

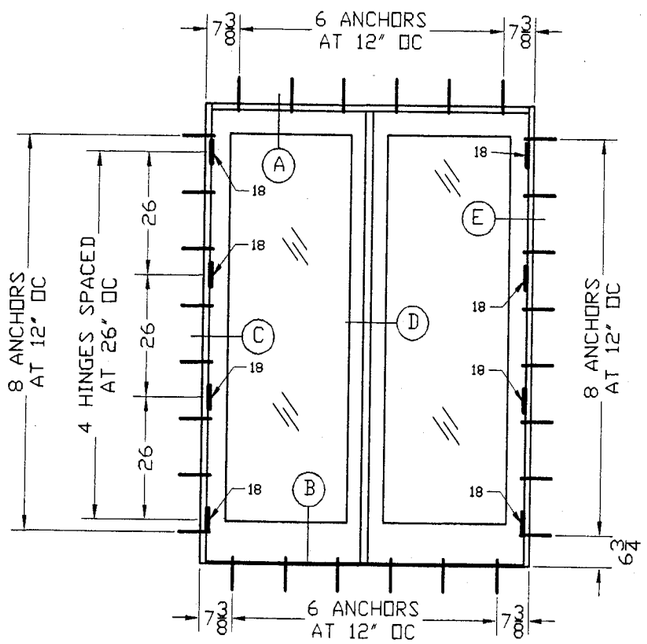

INSIDE ELEVATION

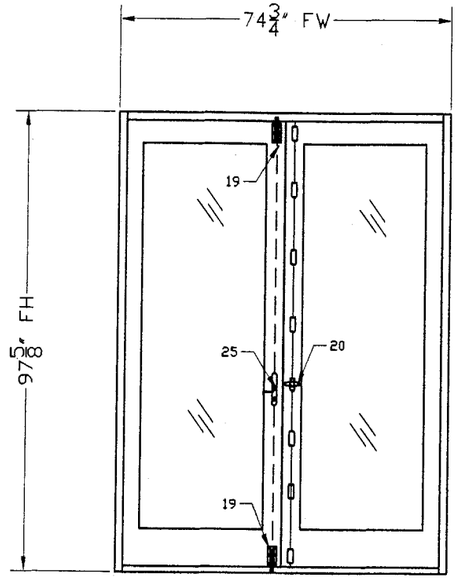

MODEL C - SQUARE CASEMENT WINDOW
DESIGNED LOADS = +53 PSF, -70 PSF

MAX. FRAME SIZE = 74 3/4" X 97 5/8" X 6" DEEP FRAME
MAX. PANEL SIZE = 35 15/16" X 95 7/16" X 2 1/8" DEEP
MAX. GLASS SIZE = 26 3/4" X 84 1/4 X .511" THICK
WATER TEST PRESSURE: ±8 PSF (53.33 DP)

INSTALLATION NOTES:
1- ANCHOR: 1/4" TAPCON BY ELCO

SUBSTRATUM	EMBEDMENT
WOOD (SG=.55)	1 1/2"
CONCRETE (3320 psi)	1 1/4"
MASONRY BLOCK	1 1/4"

2- QUANTITY & SPACING AS PER ELEVATION
3- 1X OR 2X WOOD BUCK TO BE DESIGNED BY OTHERS FOR IMPOSED LOADS.

SEE SHEET 7 OF 11 FOR DETAILS

BILL OF MATERIALS

ITEM#	DESCRIPTION	SIZE	MATERIAL & REMARKS
1	FRAME HEADER	1.75" x 6.00" x 1.25"	MAHOGANY WOOD
2	FRAME SILL	1.25" x 6.00" x 0.63"	MAHOGANY WOOD
3	FRAME JAMB	1.75" x 6.00" x 1.25"	MAHOGANY WOOD
4	PANEL TOP RAIL	2.13" x 5.00" x 3.50"	MAHOGANY WOOD
5	PANEL BOTTOM RAIL	2.13" x 7.50" x 5.63"	MAHOGANY WOOD
6	PANEL HINGE STILE	2.13" x 5.00" x 3.94"	MAHOGANY WOOD
7	PANEL LOCK STILE	2.13" x 5.00" x 4.00"	MAHOGANY
8	-	-	-
9	MAHOGANY WOOD BEAD	1.00" x 0.75"	Attached w/ #8x 1 1/2" wd screws
10	MAHOGANY WOOD BEAD	0.75" x 1.00"	Attached w/ #8x 1 1/2" wd screws
11	MAHOGANY WOOD ASTRAGAL	1.13" x 1.75"	Attached w/ #10x 2" wd screws at 12"oc
12	CLOSED CELL FOAM STRIP	0.5" x .625"	FOAM TAPE.FULL LENGTH OF SILL
13	Q'LON SEAL @ FRAME/PANELS	.58" x 0.65"	SCHLEGEL #QDS-650
14	Q'LON SEAL @ PANELS RAILS	.335" x .336"	SCHLEGEL #QEZ320
15	SEALANT - CLEAR SILICONE		GE STOCK #012A
16	1/2" LAMINATED GLASS	.511" THICK	GLASSLAM
17	GLAZING CLEAR SILICONE	.90x.051	DOW CORNING 995

HARDWARE SCHEDULE

HINGES (18):
(4 HINGES/JAMB) JARDINIER MASSARD, FRANCE, #23 SPACED AT 26" OC ATTACHED TO PANEL W/ (8) #10X 1 1/2" WS

ACTIVE STILE:
CENTER HANDLE (20) ROUSTIQUE ARTICLE CODE 042100 MODEL RY 59 FASTENED W/ (4) #10X 1 1/4"
(7) 2.4" X 1.656" CLASSIC GUIDES (STEEL) W/ (2) #10X 1 1/4" EXCEPT TOP AND BOTTOM HAD (2) 1/8"X3" MS W/ DOUBLE NUTS. THE STRIKE PLATE WAS 1/4" THICK STEEL.
1/2" LOCKING THROW WAS A .625" DIAM SEMI-TUBE X.154"X35" LONG AT BOTTOM AND 57.5" LONG AT TOP. ALSO, THE TOP AND BOTTOM ENDS (3") WERE FILLED WITH A WELDED 1/8" WIDE STEEL PLATE.

INACTIVE STILE:
(19) NATIONAL .611" DIA. THROW CONNECTED WITH (6) 1/4-20 SS MS AND NUTS.
(25) SCHELEGEL MULTI-BOLT LOCK WITH BRASS KEEP SET, 52 MM BA 8" FULL LENGTH STAINLESS.

MANUFACTURER:
Sabana Mahogany, LLC
6157 NW 167th STREET
UNIT F-25
MIAMI LAKES, FLORIDA 33015
PH.: (305) 825-1256
FAX: (305) 825-3805

PRODUCT:
Mahogany Impact Casement Window

Engineering:
EngCo Inc.
CA 8116
6971 W. Sunrise Blvd. 104
Plantation, Fl. 33313
Tel.: (954) 585-0304
Fax: (954) 585-0305

AUG 23 2007
Engineer Seal
Pedro De Figueiredo
PE 52609

Date: 8/20/07
Scale: NA
Design by: PPMF

Miami Dade Office:
Acceptance No 07-0912.02
Expiration Date 10/07/2008
By
Miami Dade Product Control Division

Drawing Number
07-230

MODEL C - SQUARE CASEMENT WINDOW
DESIGNED LOADS = +53 PSF, -70 PSF

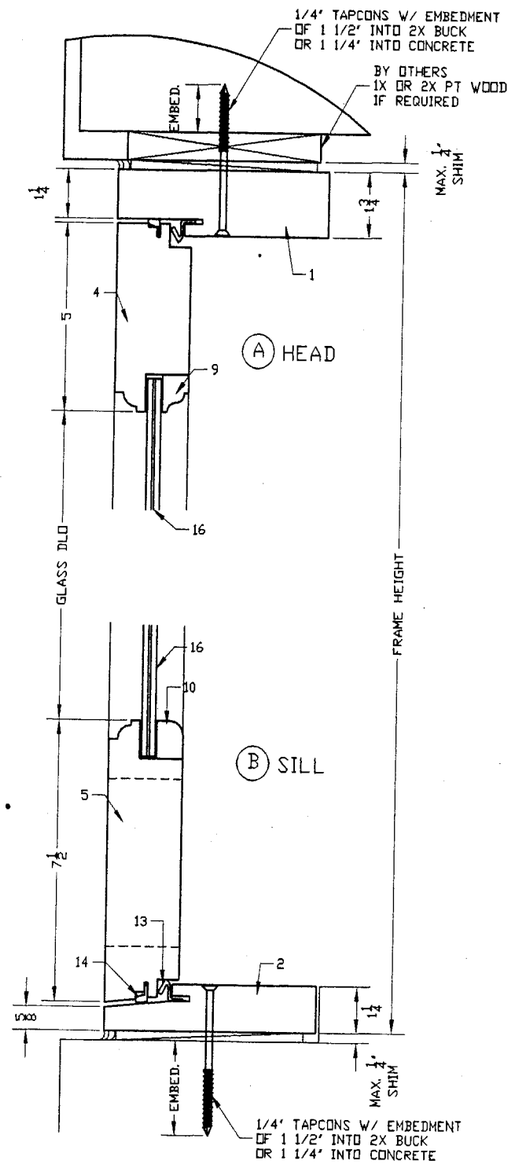

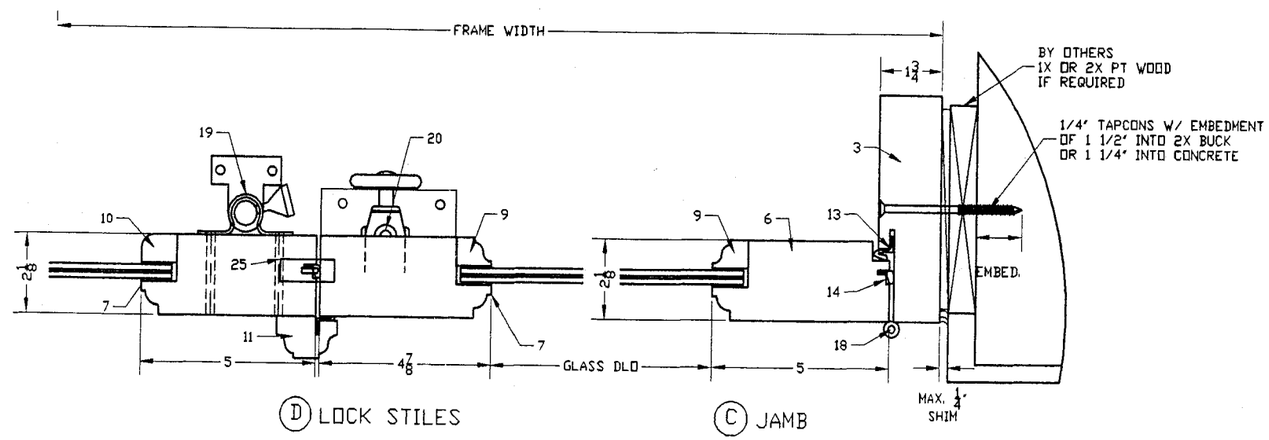

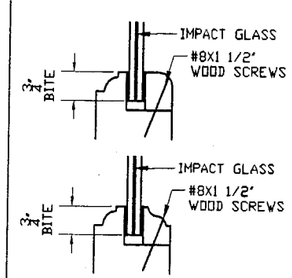

GLASS DESCRIPTION:

1- GLASSLAM SAFETY PLUS I
(1) 3/16" ANNEALED GLASS SHEET +
(1) .063" RESIN BY GLASSLAM +
(1) .010" SAFETY-PLUS POLYESTER INTERLAYER +
(1) .063" RESIN BY GLASSLAM +
(1) 3/16" ANNEALED GLASS SHEET

2- GLAZING METHOD:
GLASS GLAZED WITH SILICONE DOW CORNING #995 0.9 X .051 THICK OVER A 3/4" GLASS BITE.
1 X 3/4" WOOD BEAD WAS CONNECTED TO THE RAILS & STILES WITH #8X 1 1/2" WOOD SCREWS AT 5"OC

FRAME & PANEL GENERAL NOTES

1- FRAME ASSEMBLY NOTES:
EACH SOLID MAHOGANY WOOD FRAME HEAD, SILL & JAMBS ARE 6" DEEP AND THE CORNERS ARE BUTT JOINED WITH WOOD GLUE AND FASTENED WITH (4) #14X3" WOOD SCREWS IN EACH CORNER.

2- PANEL ASSEMBLY NOTES:
EACH SOLID MAHOGANY WOOD STILE & RAIL IS 2 1/8" DEEP AND THE CORNERS, 1/2"thick x3"x3" TENON AND WOOD GLUE JOINT.

3- INSTALLATION SEALANT NOTES:
THE FRAME AND ALL EXPOSED INSTALLATION FASTENERS MUST BE PROPERLY SEALED WITH "GE" STOCK GE012A SILICONE.

MANUFACTURER:
Sabana Mahogany, LLC
6157 NW 167th STREET
UNIT F-25
MIAMI LAKES, FLORIDA 33015
PH.: (305) 825-1256
FAX: (305) 825-3805

PRODUCT:
Mahogany Impact Casement Window

Engineering:
EngCo Inc.
CA 8116
6971 W. Sunrise Blvd. 104
Plantation, Fl. 33313
Tel.: (954) 585-0304
Fax: (954) 585-0305

AUG 23 2007

Engineer Seal
Pedro De Figueiredo
PE 52609

Date: 8/20/07
Scale: NA
Design by: PPMF

Miami Dade Office:

PRODUCT RE[illegible]
as complying with the [illegible]
Building Code
Acceptance No 07-0912.02
Expiration Date 10/07/2008
By [illegible]
Miami Dade Product Control Division

Drawing Number
07-230

OUTSIDE ELEVATION

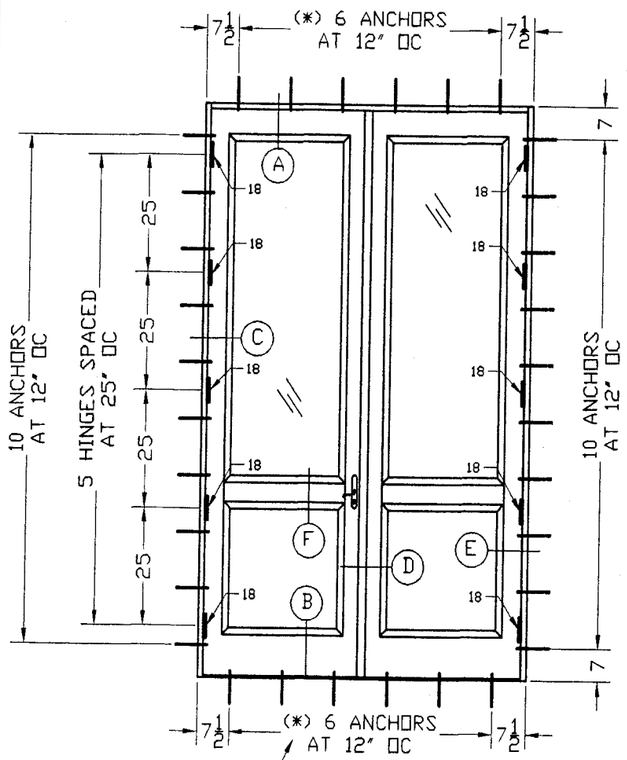

(*) INCREASE AMOUNT OF ANCHORS TO 7 AT 10 1/2" OC WHEN HEADER/SILL FRAMING ARE ANCHORED INTO CONCRETE WITH 1X WOOD BUCK

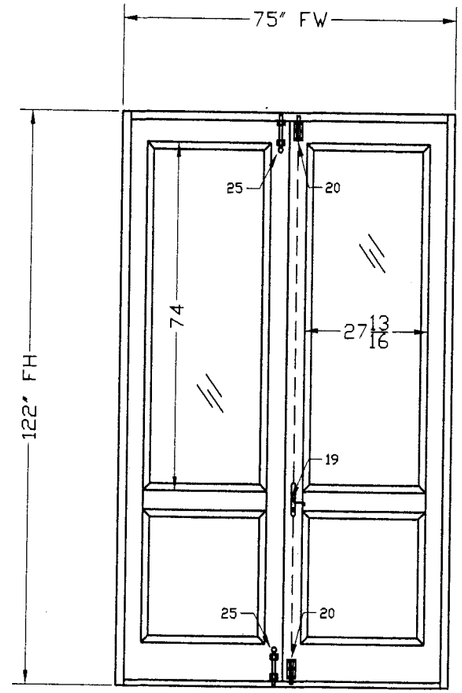

INSIDE ELEVATION

MODEL D - SOLID WOOD PANEL FRENCH CASEMENT WINDOW
DESIGNED LOADS = +53 PSF, -70 PSF

MAX. FRAME SIZE = 75" X 122"X 6" DEEP FRAME
MAX. PANEL SIZE = 35 15/16" X 120 5/16" X 2 1/8" DEEP
MAX. SOLID RAISED PANEL = 27 13/16 X 74 X 1 1/2" THICK
MAX. GLASS SIZE = 26 3/4" X 84 1/4 X .511" THICK
WATER TEST PRESSURE: ±8 PSF (53.33 DP)

INSTALLATION NOTES:
1- ANCHOR: 1/4" TAPCON BY ELCO

SUBSTRATUM	EMBEDMENT
WOOD (SG=.55)	1 1/2"
CONCRETE (3320 psi)	1 1/4"
MASONRY BLOCK	1 1/4"

2- QUANTITY & SPACING AS PER ELEVATION
3- 1X OR 2X WOOD BUCK TO BE DESIGNED BY OTHERS FOR IMPOSED LOADS.

SEE SHEET 9 OF 11 FOR DETAILS

BILL OF MATERIALS

ITEM#	DESCRIPTION	SIZE	MATERIAL & REMARKS
1	FRAME HEADER	1.75" x 6.00" x 1.25"	MAHOGANY WOOD
2	FRAME SILL	1.25" x 6.00" x 0.50"	MAHOGANY WOOD
3	FRAME JAMB	1.75" x 6.00" x 1.25"	MAHOGANY WOOD
4	PANEL TOP RAIL	2.13" x 5.25" x 4.25"	MAHOGANY WOOD
5	PANEL BOTTOM RAIL	2.13" x 9.75" x 9.50"	MAHOGANY WOOD
6	PANEL HINGE STILE	2.13" x 4.89" x 3.89"	MAHOGANY WOOD
7	PANEL LOCK STILE	2.13" x 5.13" x 4.13"	MAHOGANY
8	RAISE PNL HOR. STILE	2.13" x 6.00" x 4.00"	MAHOGANY
9	MAHOGANY WOOD BEAD	1.00" x 0.75"	Attached w/ #8x 1 1/2" wd screws
10	MAHOGANY WOOD BEAD	0.75" x 1.00"	Attached w/ #8x 1 1/2" wd screws
11	MAHOGANY WOOD ASTRAGAL	1.13" x 1.75"	Attached w/ #10x 2" wd screws at 12"oc
12	CLOSED CELL FOAM STRIP	0.5" x .625"	FOAM TAPE FULL LENGTH OF SILL
13	Q'LON SEAL @ FRAME/PANELS	.58" x 0.65"	SCHLEGEL #QDS-650
14	Q'LON SEAL @ PANELS RAILS	.335" x .336"	SCHLEGEL #QEZ320
15	RAISED PANEL	27.8" x74" x1.5" thk	SOLID PINE
15A	1/2" LAMINATED GLASS	.511" THICK	GLASSLAM
16	SEALANT - CLEAR SILICONE		GE STOCK #012A
17	GLAZING CLEAR SILICONE	.75x.50x.051 Thk	GE STOCK #012A

HARDWARE SCHEDULE

(18) HINGES:
(4 HINGES/JAMB) JARDINIER MASSARD, FRANCE, #23 SPACED AT 26" OC ATTACHED TO PANEL W/ (8) #10X 1 1/2" WS

INACTIVE STILE:
(25) JARDINIER MASSARD, FRANCE, VERROUS A ENTAILLER REF. 321 W/ .312" Diam. X .567 THROW AT TOP/BOTTOM.

ACTIVE STILE:
(19) SCHELEGEL MULTI-BOLT LOCK WITH BRASS KEEP SET, 52 MM BA 10" FULL LENGTH STAINLESS. THE STRIKE PLATE WAS 1/4" THICK STEEL.
(20) NATIONAL .611" DIA. THROW CONNECTED WITH (6) 1/4-20 SS MS AND NUTS. IVES MODEL 453 WITH (4) 1/4-20 SS MS AND NUTS.

MANUFACTURER:
Sabana Mahogany, LLC
6157 NW 167th STREET
UNIT F-25
MIAMI LAKES, FLORIDA 33015
PH.: (305) 825-1256
FAX: (305) 825-3805

PRODUCT:
Mahogany Impact Casement Window

Engineering:
EngCo Inc.
CA 8116
6971 W. Sunrise Blvd. 104
Plantation, Fl. 33313
Tel.: (954) 585-0304
Fax: (954) 585-0305

AUG 23 2007
Engineer Seal
Pedro De Figueiredo
PE 52609

Date: 8/20/07
Scale: NA
Design by: PPMF

Miami Dade Office:

PRODUCT RENEWED
as complying with the Florida Building Code
Acceptance No 07-0912.02
Expiration Date 10/07/2008
By
Miami Dade Product Control Division

Drawing Number
07-230

MODEL D - SOLID WOOD PANEL CASEMENT WINDOW
DESIGNED LOADS = +53 PSF, -70 PSF

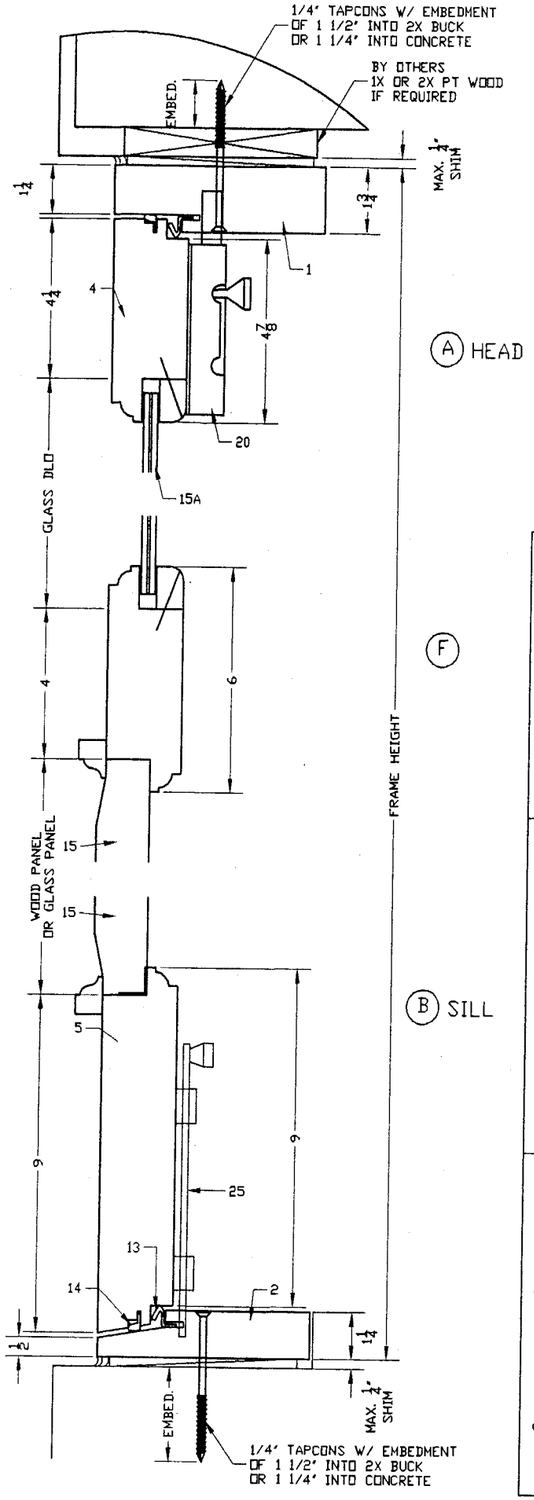

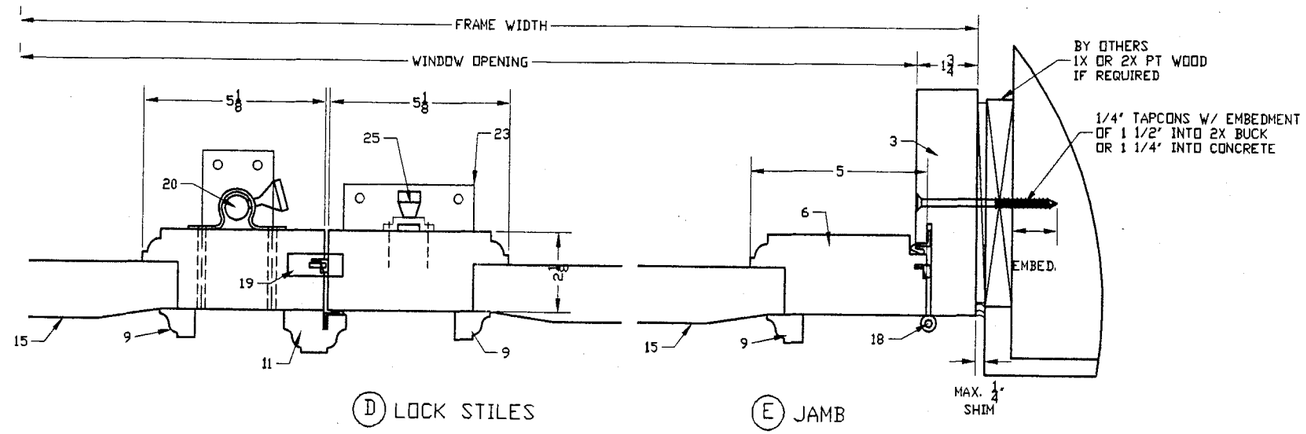

FRAME & PANEL GENERAL NOTES

1- FRAME ASSEMBLY NOTES:
EACH SOLID MAHOGANY WOOD FRAME HEAD, SILL & JAMBS ARE 6' DEEP AND THE CORNERS ARE BUTT JOINED WITH WOOD GLUE AND FASTENED WITH (4) #14X3' WOOD SCREWS IN EACH CORNER.

2- PANEL ASSEMBLY NOTES:
EACH SOLID MAHOGANY WOOD STILE & RAIL IS 2 1/8' DEEP AND THE CORNERS, 1/2' thick x3' x3' TENON AND WOOD GLUE JOINT.

3- INSTALLATION SEALANT NOTES:
THE FRAME AND ALL EXPOSED INSTALLATION FASTENERS MUST BE PROPERLY SEALED WITH 'GE' STOCK GE012A SILICONE.

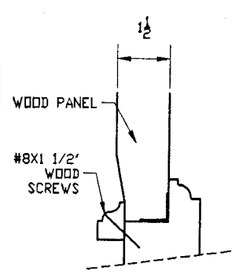

WOOD PANELS DESCRIPTION:

1 1/2' THICK SOLID PINE WOOD PANEL PLACED IN A 3/4' X 1 1/4' BEDDING IN RAILS AND STILES AND A 3/4' X 3/4' X 1/2' X .051' THICK CONTINUOUS GE WINDOW & WINDOW STOCK # GE012A CLEAR SILICONE BEAD. A 1/2 X 13/16 WOOD MOULDING CONNECTED WITH #8X1 1/2' WOOD SCREWS SPACED AT 9'OC.

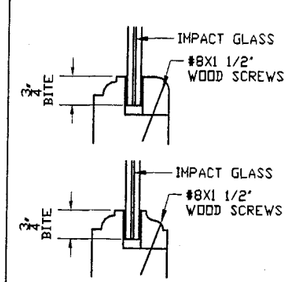

GLASS DESCRIPTION:

1- GLASSLAM SAFETY PLUS I
(1) 3/16' ANNEALED GLASS SHEET +
(1) .063' RESIN BY GLASSLAM +
(1) .010' SAFETY-PLUS POLYESTER INTERLAYER +
(1) .063' RESIN BY GLASSLAM +
(1) 3/16' ANNEALED GLASS SHEET

2- GLAZING METHOD:
GLASS GLAZED WITH SILICONE DOW CORNING #995 0.9 X .051 THICK OVER A 3/4' GLASS BITE.
1 X 3/4' WOOD BEAD WAS CONNECTED TO THE RAILS & STILES WITH #8X 1 1/2' WOOD SCREWS AT 5'OC

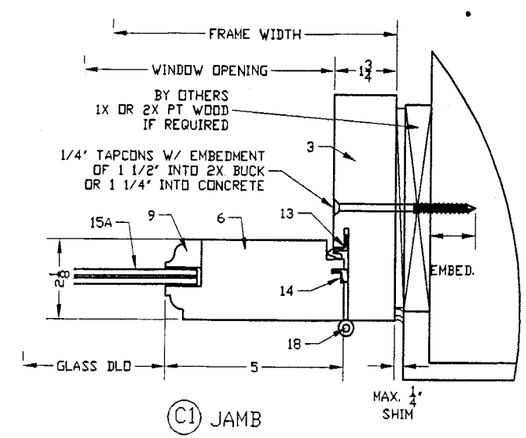

MANUFACTURER:
Sabana Mahogany, LLC
6157 NW 167th STREET
UNIT F-25
MIAMI LAKES, FLORIDA 33015
PH.: (305) 825-1256
FAX: (305) 825-3805

PRODUCT:
Mahogany Impact Casement Window

Engineering:
EngCo Inc.
CA 8116
6971 W. Sunrise Blvd. 104
Plantation, Fl. 33313
Tel.: (954) 585-0304
Fax: (954) 585-0305

AUG 23 2007

Engineer Seal
Pedro De Figueiredo
PE 52609

Date: 8/20/07
Scale: NA
Design by: PPMF

Miami Dade Office:

PRODUCT RENEWED
as complying with the Florida Building Code
Acceptance No 07-0912.02
Expiration Date 10/07/2008
By
Miami Dade Product Control Division

Drawing Number
07-230

OUTSIDE ELEVATION

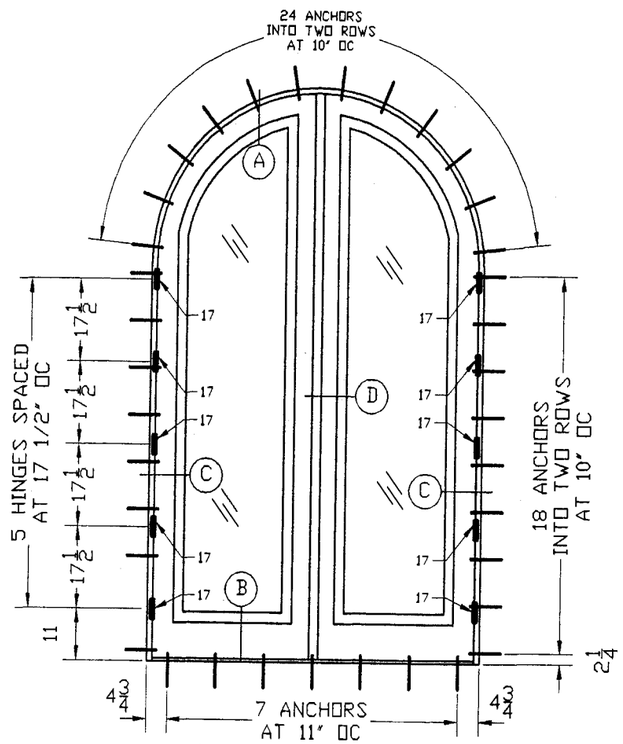

INSIDE ELEVATION

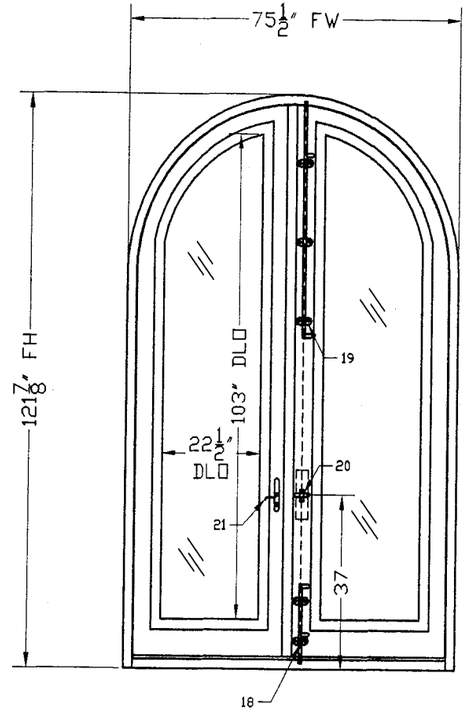

MODEL E - FULL ARCHED CASEMENT WINDOW
DESIGNED LOADS = +75 PSF, -83 PSF

MAX. FRAME SIZE = 74 1/2" X 121 7/8" X 6" DEEP FRAME
MAX. PANEL SIZE = 37 1/2" X 119 3/4" X 2 1/2" DEEP
MAX. GLASS SIZE = 24 1/2" X 105" X .57" THICK
MAX. GLASS DLO = 22 1/2" X 103"
WATER TEST PRESSURE: ±11.25 PSF (75 DP)

INSTALLATION NOTES:
1- ANCHOR: 1/4" TAPCON BY ELCO

SUBSTRATUM	EMBEDMENT
WOOD (SG>=.55)	1 1/2"
CONCRETE (3320 psi)	1 1/4"
MASONRY BLOCK	1 1/4"

2- QUANTITY & SPACING AS PER ELEVATION
3- 1X OR 2X WOOD BUCK TO BE DESIGNED BY OTHERS FOR IMPOSED LOADS.

SEE SHEET 11 OF 11 FOR DETAILS

BILL OF MATERIALS

ITEM#	DESCRIPTION	SIZE	REMARKS
1	FRAME (ARCH HEADER)	2.00" x 6.00"	LAMINATED MAHOGANY
2	FRAME (JAMB)	2.00" x 6.00"	LAMINATED MAHOGANY
3	FRAME (SILL)	2.00" x 6.00"	LAMINATED MAHOGANY
4	FRAME (SILL BUMPER)	0.69" x 1.75"	LAMINATED MAHOGANY
5	SASH (ARCH RAIL)	2.60" x 6.62"	LAMINATED MAHOGANY
6	SASH (BOTTOM RAIL)	2.60" x 9.21"	LAMINATED MAHOGANY
7	SASH (HINGE RAIL)	2.60" x 6.50"	LAMINATED MAHOGANY
8	SASH (LOCK RAIL)	2.60" x 6.44"	LAMINATED MAHOGANY
9	SASH (INACTIVE RAIL)	2.60" x 6.44"	LAMINATED MAHOGANY
10	SASH (EXT. GLASS STOP)	2.25" x 1.69"	LAMINATED MAHOGANY
10A	SASH (INT. GLASS STOP)	2.25" x 1.69"	LAMINATED MAHOGANY
11	SASH (INT. ASTRAGAL)	2.25" x 2.06"	LAMINATED MAHOGANY
12	BOTTOM & HINGE REINF.	1.00" x 0.25"	STEEL
13	ASTRAGAL REINF.	0.63" x 0.63"	STEEL
14	LOCK RAIL REINF.	0.25" CHANNEL	STEEL
15	WEATHER STRIPPING	QEBD6650-B97	VINYL
16	WEATHER STRIPPING	QEZ-320-BRZ	VINYL

HARDWARE SCHEDULE

(17) HINGES:
(5 HINGES/JAMB) MADE BY SABANA WINDOWS INSTALLED AT 17 1/2" OC

INACTIVE STILE:
(19) & (18) SURFACE BOLTS MADE BY SABANA WINDOWS CONSISTED OF 50"(TOP) AND 16 3/4" (BOTTOM) LONG x .75" DIAMETER STEEL ROD WITH TWO 1" DIAMETER RINGS WELDED 3 1/2" AND 19 3/4" FROM END OF THE ROD. THE ROD WAS SUPPORTED BY THREE 2 X 3 1/8" X 1/4" THICK STEEL GUIDE PLATES WITH 1 3/8" RINGS WELDED AT TOP EACH PLATE TO GUIDE THE LOCKING ROD. THE ROD PENETRATED 1" THROUGH THE FRAME MOULDING. THE TOP MOST PLATE WAS CENTERED 1 3/4" FROM EDGE OF WINDOW
(20) TWO POINT LOCK WITH 3/4" DIAMETER STEEL RODS EXTENDING 1" THROUGH FIX PANEL LOCK STILE AND INTO FRAME GOING THROUGH FRAME AND SASH LOCK REINFORCEMENT PLATES. THE LOCK WAS OPERATED BY A HANDLE AT AT 37" FROM BOTTOM OF WINDOW.

ACTIVE STILE:
(21) MUL-T-LOCK MODEL SERIES 700 LOCK, SINGLE LATCH ONLY.

ARCH STRAP CONSTRUCTION:
THE CURVE HEAD AND THE JAMBS WERE BUTT JOINED USING 1/4X3X1/2" TENON AND GLUE. THE STEEL STRAP MADE OF 1/4X2X141" WAS ATTACHED TO WOOD FRAMING WITH (17) #12X1 1/4" WOOD SCREWS.

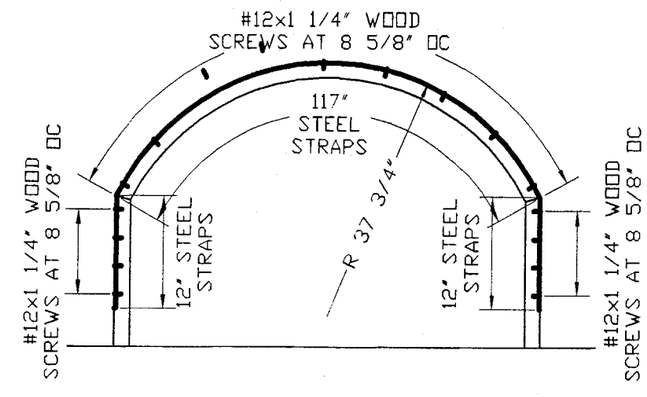

MANUFACTURER:
Sabana Mahogany, LLC
6157 NW 167th STREET
UNIT F-25
MIAMI LAKES, FLORIDA 33015
PH.: (305) 825-1256
FAX: (305) 825-3805

PRODUCT:
Mahogany Impact Casement Window

Engineering:
EngCo Inc.
CA 8116
6971 W. Sunrise Blvd. 104
Plantation, Fl. 33313
Tel.: (954) 585-0304
Fax: (954) 585-0305

AUG 23 2007

Engineer Seal
Pedro De Figueiredo
PE 52609

Date: 8/20/07
Scale: NA
Design by: PPMF

Miami Dade Office:

PRODUCT RENEWED
as complying with the Florida Building Code
Acceptance No 07-0912.02
Expiration Date 10/07/2008
By
Miami Dade Product Control Division

Drawing Number
07-230

MODEL E - FULL ARCHED CASEMENT WINDOW
DESIGNED LOADS = +75 PSF, -83 PSF

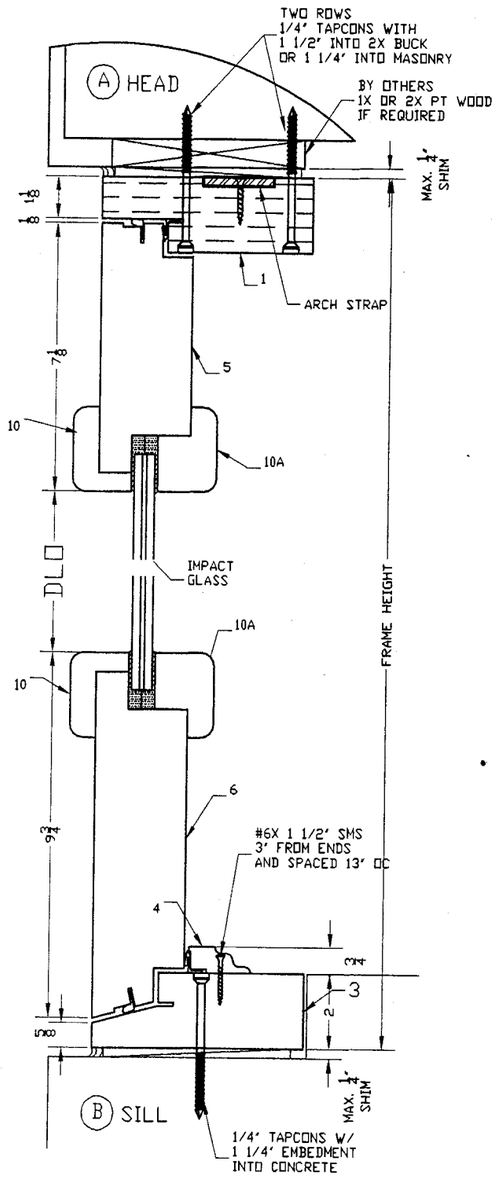

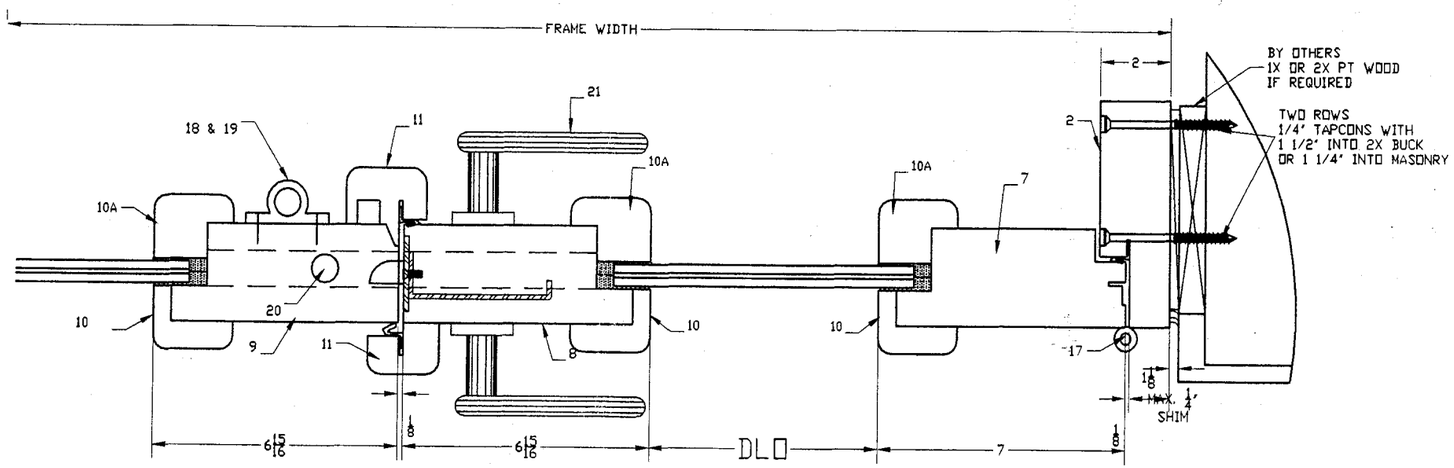

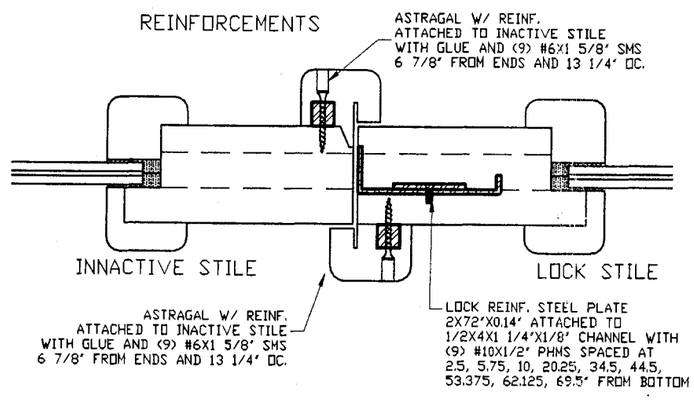

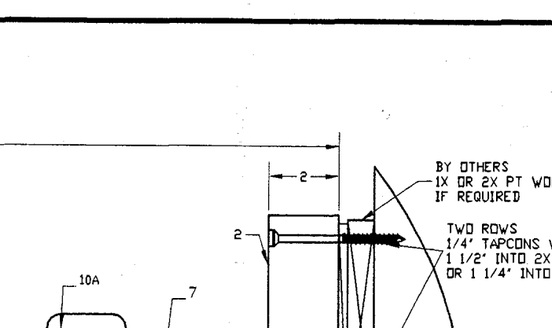

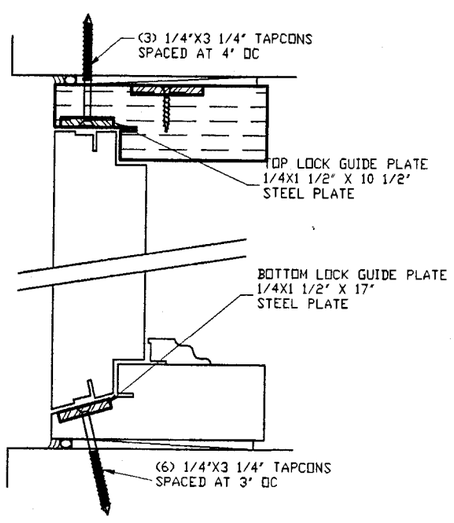

GLAZING DETAIL

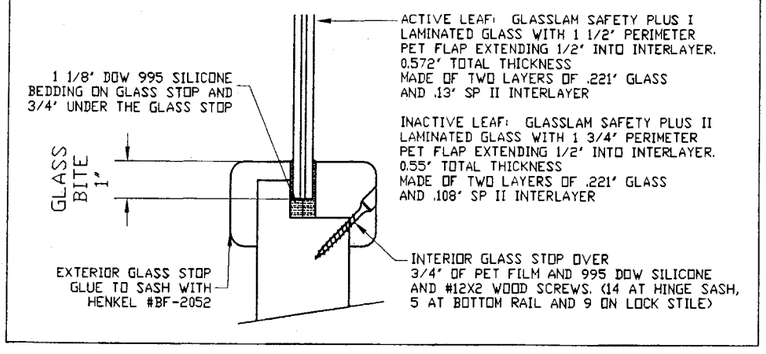

MANUFACTURER:
Sabana Mahogany, LLC
6157 NW 167th STREET
UNIT F-25
MIAMI LAKES, FLORIDA 33015
PH. : (305) 825-1256
FAX: (305) 825-3805

PRODUCT:
Mahogany Impact Casement Window

Engineering:
EngCo Inc.
CA 8116
6971 W. Sunrise Blvd. 104
Plantation, Fl. 33313
Tel.: (954) 585-0304
Fax: (954) 585-0305

AUG 23 2007

Engineer Seal
Pedro De Figueiredo
PE 52609

Date: 8/20/07
Scale: NA
Design by: PPMF

Miami Dade Office:

PRODUCT RENEWED
as complying with the Florida Building Code
Acceptance No 07-0912.02
Expiration Date 10/07/2008
By
Miami Dade Product Control Division

Drawing Number
07-230