MIAMI-DADE COUNTY

BUILDING CODE COMPLIANCE OFFICE (BCCO)
PRODUCT CONTROL DIVISION

MIAMI-DADE COUNTY, FLORIDA
METRO-DADE FLAGLER BUILDING
140 WEST FLAGLER STREET, SUITE 1603
MIAMI, FLORIDA 33130-1563
(305) 375-2901 FAX (305) 372-6339
www.miamidade.gov/buildingcode

NOTICE OF ACCEPTANCE (NOA)

Pella Corporation
102 Main Street
Pella, IA 50219

SCOPE:

This NOA is being issued under the applicable rules and regulations governing the use of construction materials. The documentation submitted has been reviewed by Miami-Dade County Product Control Division and accepted by the Board of Rules and Appeals (BORA) to be used in Miami Dade County and other areas where allowed by the Authority Having Jurisdiction (AHJ).

This NOA shall not be valid after the expiration date stated below. The Miami-Dade County Product Control Division (In Miami Dade County) and/or the AHJ (in areas other than Miami Dade County) reserve the right to have this product or material tested for quality assurance purposes. If this product or material fails to perform in the accepted manner, the manufacturer will incur the expense of such testing and the AHJ may immediately revoke, modify, or suspend the use of such product or material within their jurisdiction. BORA reserves the right to revoke this acceptance, if it is determined by Miami-Dade County Product Control Division that this product or material fails to meet the requirements of the applicable building code.

This product is approved as described herein, and has been designed to comply with the Florida Building Code, including the High Velocity Hurricane Zone.

DESCRIPTION: 10'-0" Aluminum Clad Wood Outswing French Glazed Doors – L.M.I.

APPROVAL DOCUMENT: Drawing No. **1499**, titled Architect Series "10'-0" Aluminum Clad Wood Outswing French Glazed Doors", sheets 1 through 11 of 11, dated 11/08/2006 with the latest revision dated 03/23/2007, prepared by W. W. Schafer Engineering & Consulting, P.A., signed and sealed by Warren W. Schafer, P.E., bearing the Miami-Dade County Product Control Approval stamp with the Notice of Acceptance number and approval date by the Miami-Dade County Product Control Division.

MISSILE IMPACT RATING: Large and Small Missile Impact Resistant

LABELING: Each unit shall bear a permanent label with the manufacturer's name or logo, Pella, IA or Shenandoah, IA and following statement: "Miami-Dade County Product Control Approved", unless otherwise noted herein.

APPROVAL of this NOA shall be considered after an approval application has been filed and there has been no change in the applicable building code negatively affecting the performance of this product.

TERMINATION of this NOA will occur after the expiration date or if there has been a revision or change in the materials, use, and/or manufacture of the product or process. Misuse of this NOA as an endorsement of any product, for sales, advertising or any other purposes shall automatically terminate this NOA. Failure to comply with any section of this NOA shall be cause for termination and removal of NOA.

ADVERTISEMENT: The NOA number preceded by the words Miami-Dade County, Florida, and followed by the expiration date may be displayed in advertising literature. If any portion of the NOA is displayed, then it shall be done in its entirety.

INSPECTION: A copy of this entire NOA shall be provided to the user by the manufacturer or its distributors and shall be available for inspection at the job site at the request of the Building Official.

This NOA **revises and supersedes NOA # 06-1228.04** and consists of this page 1 and evidence page E-1 and E-2, as well as approval document mentioned above.

The submitted documentation was reviewed by **Jaime D. Gascon, P.E.**

PRODUCT CONTROL ACCEPTED

J. Gascon
10/24/07

NOA No. 07-0914.01
Expiration Date: May 16, 2012
Approval Date: November 15, 2007

Pella Corporation

NOTICE OF ACCEPTANCE: EVIDENCE SUBMITTED

A. DRAWINGS

1. Manufacturer's die drawings and sections.
2. Drawing No. **1499**, titled Architect Series "10'-0" Aluminum Clad Wood Outswing French Glazed Doors", sheets 1 through 11 of 11, dated 11/08/2006 with the latest revision dated 03/23/2007, prepared by W. W. Schafer Engineering & Consulting, P.A., signed and sealed by Warren W. Schafer, P.E.
   (Submitted under NOA# 06-1228.04)

B. TESTS

1. Test reports on:
   1) Air Infiltration Test, per FBC, TAS 202-94
   2) Uniform Static Air Pressure Test, Loading per FBC TAS 202-94
   3) Water Resistance Test, per FBC, TAS 202-94
   4) Large Missile Impact Test per FBC, TAS 201-94
   5) Cyclic Wind Pressure Loading per FBC, TAS 203-94
   6) Forced Entry Test, per FBC 2411 3.2.1, TAS 202-94
   7) Correction of glazing description, dated March 23, 2007

   along with marked-up drawings and installation diagram prepared by Architectural Testing, Inc., Test Report No. **ATI-68351.01-201-18**, dated 10/23/06, signed and sealed by Joseph A. Reed, P.E.
   (Submitted under NOA# 06-1228.04)

C. CALCULATIONS

1. Anchor verification calculations and structural analysis, complying with FBC-2004, prepared by W. W. Schafer Engineering & Consulting, P.A., dated 03/23/2007, signed and sealed by Warren W. Schafer, P.E.
   Complies with ASTM E1300-98/ 02
   (Submitted under NOA# 06-1228.04)

D. QUALITY ASSURANCE

1. Miami Dade Building Code Compliance Office (BCCO).

E. MATERIAL CERTIFICATIONS

1. Notice of Acceptance No. **05-1208.02** issued to E.I. DuPont DeNemours & Co., Inc. for "**DuPont Butacite PVB, Interlayer**" dated 01/05/2006, expiring on 12/11/2010.

F. STATEMENTS

1. Statement letter of conformance, dated December 12, 2006, signed and sealed by Warren W. Schafer, P.E.
   (Submitted under NOA# 06-1228.04)

Jaime D. Gascon, P.E.
Chief, Product Control Division
NOA No. 07-0914.01
Expiration Date: May 16, 2012
Approval Date: November 15, 2007

FRAME ANCHOR REQUIREMENTS TABLE

OPENING TYPE (SUBSTRATE)	FRAME/CLIP/NAIL FIN TO OPENING FASTENER TYPE	MINIMUM EMBED	MINIMUM EDGE DIST.
FRAME SHEAR SCREWS			
MIN. 2X4 WOOD FRAME OR BUCK (MIN. GR. 3 & G=0.55)	NO. 10 SMS OR WOOD SCREW	1 1/4"	3/4"
MIN. 18 GA. 33 KSI METAL STUD	NO. 10 SELF TAP/DRILLING SCREW	FULL	1/2"
MIN. 1/8" THK A36 STEEL	NO. 10 SELF TAP/DRILLING SCREW	FULL	1/2"
MIN. 1/8" THK 6063-T5 ALUM.	NO. 10 SELF TAP/DRILLING SCREW	FULL	1/2"
CMU/CONCRETE	(1) 1/4" CONCRETE SCREW	1 1/4"	2"
INSTALLATION CLIP			
MIN. 2X4 WOOD FRAME OR BUCK (MIN. GR. 3 & G=0.55)	NO. 8 X 1 1/2" SMS	1 3/8"	1/2"
NAILING FIN			
MIN. 2X4 WOOD FRAME OR BUCK (MIN. GR. 3 & G=0.55)	NO. 8 X 1 1/2" SMS	1 3/8"	1/2"
MIN. 2X4 WOOD FRAME OR BUCK (MIN. GR. 3 & G=0.55)	2" X 11 GA. ROOFING NAIL	1 7/8"	1/2"
HINGE SCREWS			
MIN. 2X4 WOOD FRAME OR BUCK (MIN. GR. 3 & G=0.55)	NO. 12 SMS OR WOOD SCREW	1 1/4"	3/4"
MIN. 18 GA. 33 KSI METAL STUD	NO. 12 SELF TAP/DRILLING SCREW	FULL	1/2"
MIN. 1/8" THK A36 STEEL	NO. 12 SELF TAP/DRILLING SCREW	FULL	1/2"
MIN. 1/8" THK 6063-T5 ALUM.	NO. 12 SELF TAP/DRILLING SCREW	FULL	1/2"
CMU/CONCRETE	(1) 1/4" CONCRETE SCREW	1 1/4"	2"
STRIKE SCREWS			
MIN. 2X4 WOOD FRAME OR BUCK (MIN. GR. 3 & G=0.55)	NO. 8 SMS OR WOOD SCREW	1 1/4"	3/4"
MIN. 18 GA. 33 KSI METAL STUD	NO. 8 SELF TAP/DRILLING SCREW	FULL	1/2"
MIN. 1/8" THK A36 STEEL	NO. 8 SELF TAP/DRILLING SCREW	FULL	1/2"
MIN. 1/8" THK 6063-T5 ALUM.	NO. 8 SELF TAP/DRILLING SCREW	FULL	1/2"
CMU/CONCRETE	(1) 3/16" CONCRETE SCREW	1 1/4"	2"

(1) CONCRETE SCREWS SHALL BE ELCO OR ITW RAMSET/RED HEAD TAPCONS, HILTI KWIK-CON II OR POWERS RAWL TAPPER (HARDENED STEEL OR S.S.).

HINGE REQUIREMENTS

FRAME HEIGHT	MIN. # OF HINGES
ABOVE 95 1/2"	4
95 1/2" OR LESS	3

CORNER CONSTRUCTION

JAMB CORNERS: SIDE JAMBS ARE COPED & BUTTED TO HEAD & SILL AND SECURED WITH 2 NO. 8 X 3" WOOD SCREWS AT EACH HEAD CORNER AND 3 NO. 8 X 3" WOOD SCREWS AT EACH SILL CORNER.

DOOR PANEL CORNERS: RAILS ARE BUTTED TO STILES & JOINED WITH 2 NO. 12 X 4" SCREWS AT TOP RAIL & 3 NO. 12 X 4" SCREWS AT BOTTOM RAIL ON THE HINGE SIDE. ON THE LOCK SIDE, 2 NO. 12 X 6" SCREWS AT EACH THE TOP & BOTTOM RAILS PLUS 2 ADDITIONAL NO. 12 X 4" SCREWS AT THE BOTTOM

CLAD CORNERS: CLADDING IS MITER CUT & JOINED AT HEAD WITH CORNER KEY & 2 NO. 10 X 17/32" SCREWS PER CORNER & BUTTED AT SILL AND JOINED WITH 2 NO. 10 X 3/4" SCREWS PER CORNER.

PRODUCT REVISED
as complying with the Florida
Building Code
Acceptance No 07-0914.01
Expiration Date 05/16/2012
By
Miami-Dade Product Control
Division

ALLOWABLE GLASS PRESSURE

MAXIMUM D.L.O. HEIGHT (IN.)	MAXIMUM D.L.O. WIDTH (IN.)	DESIGN PRESSURE POSITIVE (PSF)	DESIGN PRESSURE NEGATIVE (PSF)
GLASS OPTION 3			
78 3/4	31 1/16	43.4	43.4
	29 3/16	47.6	47.6
	25 1/16	62.2	62.2
	21	70.0	85.0
69 1/4	31 1/16	47.6	47.6
	29 3/16	52.0	52.0
	25 1/16	65.9	65.9
	22	70.0	85.0
64 3/4	31 1/16	50.5	50.5
	29 3/16	54.4	54.4
	25 1/16	68.1	68.1
	22	70.0	85.0
GLASS OPTION 1 & 2			
102 3/4	31 1/16	70.0	85.0

SEE GLAZING DETAILS ON SHEET 9 FOR GLASS OPTIONS

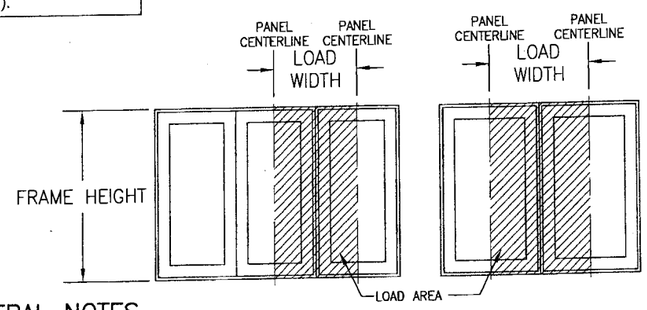

GENERAL NOTES

1. THESE DOOR SYSTEMS HAVE BEEN TESTED, ANALYZED AND APPROVED FOR DESIGN PRESSURES NOT TO EXCEED THOSE SHOWN IN THE "ALLOWABLE DESIGN LOADS" TABLE(S).
2. BUCKING, OPENINGS & BUCKING FASTENERS MUST BE PROPERLY DESIGNED & INSTALLED TO TRANSFER WIND LOADS TO THE STRUCTURE.
3. ALL HARDWARE & FASTENERS SHALL BE IN ACCORDANCE WITH THESE DRAWINGS & SHALL NOT VARY UNLESS SPECIFICALLY MENTIONED ON THE DRAWINGS.
4. THE DETAILS & SPECIFICATIONS SHOWN HEREIN REPRESENT THE PRODUCTS TESTED & PROPOSED FOR WATER, AIR, IMPACT, CYCLIC & UNIFORM STATIC AIR PRESSURE TESTING IN CONFORMANCE WITH THE 2004 FLORIDA BUILDING CODE PROTOCOLS TAS-201, 202 & 203 FOR LARGE MISSILE IMPACT DOORS.
5. THESE DOOR SYSTEMS HAVE BEEN DESIGNED IN ACCORDANCE WITH THE 2004 FLORIDA BUILDING CODE (FBC) INCLUDING HIGH VELOCITY HURRICANE ZONES (HVHZ).
6. IMPACT SHUTTERS ARE NOT REQUIRED WITH THESE DOORS.
7. ALL ANCHORS SHALL BE INSTALLED AS SPECIFIED ON THESE DRAWINGS. SPECIFIED EMBEDMENT TO BASE MATERIAL SHALL BE BEYOND WALL FINISH OR STUCCO.
8. ALL FRAME ANCHORS SECURING DOOR FRAME TO PRESSURE TREATED BUCKS OR WOOD FRAMING SHALL BE CAPABLE OF RESISTING CORROSION CAUSED BY THE PRESSURE TREATING CHEMICALS IN THE WOOD.
9. MATERIALS, INCLUDING BUT NOT LIMITED TO STEEL SCREWS, THAT COME INTO CONTACT WITH OTHER DISSIMILAR MATERIALS SHALL MEET THE REQUIREMENTS OF 2004 FLORIDA BUILDING CODE SECTION 2003.8.4.
10. ONLY CONDITIONS SHOWN IN THIS DRAWING ARE APPLICABLE TO THE PRODUCT APPROVAL. JOB SPECIFIC CONDITIONS OUTSIDE OF THIS DRAWING SHALL BE REVIEWED BY W.W. SCHAEFER & APPROVED BY THE LOCAL BUILDING OFFICIAL PRIOR TO IMPLIMENTING THOSE CONDITIONS.

ALLOWABLE DESIGN PRESSURE (TRANSOM MULLION)

MAXIMUM FRAME WIDTH (IN.)	MAXIMUM OVERALL HEIGHT (IN.)	DESIGN PRESSURE POSITIVE (PSF)	DESIGN PRESSURE NEGATIVE (PSF)
75	148	50.0	50.0
	144	51.4	51.4
	132	56.1	56.1
	120	61.7	61.7
	108	68.5	68.5
	96	70.0	77.1
71.25	148	52.6	52.6
	144	54.1	54.1
	132	59.0	59.0
	120	64.9	64.9
	108	70.0	72.1
	96	70.0	81.1
66.25	148	56.6	56.6
	144	58.2	58.2
	132	63.5	63.5
	120	69.8	69.8
	108	70.0	77.6
	96	70.0	85.0
59.25	148	63.3	63.3
	144	65.0	65.0
	132	70.0	71.1
	120	70.0	78.1
	108	70.0	85.0
50	148	70.0	70.0
	144	70.0	77.1
	132	70.0	84.1
	120	70.0	85.0
38	148	70.0	85.0

ALLOWABLE DESIGN PRESSURE (VERTICAL MULLIONS)

MAXIMUM FRAME HEIGHT (IN.)	MAXIMUM LOAD WIDTH (IN.)	DESIGN PRESSURE POSITIVE (PSF)	DESIGN PRESSURE NEGATIVE (PSF)
119.5	38	60.0	60.0
	32	70.0	71.3
	26	70.0	85.0
107.5	38	66.7	66.7
	32	70.0	79.2
	26	70.0	85.0
95.5	38	70.0	75.1
	32	70.0	85.0
86	38	70.0	83.4
	32	70.0	85.0
81.5	32	70.0	85.0

SEE ELEVATIONS ON THIS SHEET FOR LOAD WIDTH.

NOTE: ALLOWABLE PRESSURE ON ANY UNIT (SINGLE OR MULLED UNIT) SHALL BE AS CONTROLLED BY THE LESSER ALLOWABLE PRESSURE FOR THE INDIVIDUAL DOOR, THE MULLION &/OR THE GLASS.

ALLOWABLE DESIGN PRESSURE (DOUBLE RECTANGULAR DOORS)

MAXIMUM FRAME HEIGHT (IN.)	MAXIMUM FRAME WIDTH (IN.)	DESIGN PRESSURE POSITIVE (PSF)	DESIGN PRESSURE NEGATIVE (PSF)
119.5	75	50.0	50.0
	71.25	52.6	52.6
	66.25	56.6	56.6
	59.25	63.3	63.3
	50	70.0	75.0
107.5	75	55.6	55.6
	71.25	58.5	58.5
	66.25	62.9	62.9
	59.25	70.0	70.4
	50	70.0	83.4
95.5	75	70.0	70.0
	71.25	70.0	73.7
	66.25	70.0	79.2
	59.25	70.0	85.0
86.0	75	70.0	77.7
	71.25	70.0	81.8
	66.25	70.0	85.0
81.5	75	70.0	85.0

ALLOWABLE DESIGN PRESSURE (SINGLE OPERABLE RECTANGULAR DOORS)

MAXIMUM FRAME HEIGHT (IN.)	MAXIMUM FRAME WIDTH (IN.)	DESIGN PRESSURE POSITIVE (PSF)	DESIGN PRESSURE NEGATIVE (PSF)
119.5	37.875	50.0	50.0
	36	52.6	52.6
	33.5	56.6	56.5
	30	63.3	63.1
	25.375	70.0	74.6
107.5	37.875	55.6	55.6
	36	58.5	58.5
	33.5	62.9	62.8
	30	70.0	70.2
	25.375	70.0	83.0
95.5	37.875	70.0	70.0
	36	70.0	73.6
	33.5	70.0	79.1
	30	70.0	85.0
86.0	37.875	70.0	77.7
	36	70.0	81.8
	33.5	70.0	85.0
81.5	37.875	70.0	85.0

ALLOWABLE DESIGN PRESSURE (SINGLE FIXED PANEL DOORS)

MAXIMUM FRAME HEIGHT (IN.)	MAXIMUM FRAME WIDTH (IN.)	DESIGN PRESSURE POSITIVE (PSF)	DESIGN PRESSURE NEGATIVE (PSF)
119.5	37.875	70.0	85.0

DRAWN BY: W.R.M.	CHECKED BY: W.W.S.
PLOT: :=24	DATE: 11/8/06

NO.	REVISION DESCRIPTION	BY	DATE

DRAWING TITLE
ARCHITECT SERIES 10 FT. ALUMINUM CLAD IMPACT OUTSWING FRENCH DOORS

MANUFACTURER
PELLA CORPORATION
102 MAIN STREET
PELLA, IA 50219
641-621-1000

CONSULTANTS
W. W. SCHAEFER ENGINEERING & CONSULTING, P.A.
8895 N. MILITARY TRAIL; SUITE C-204
PALM BEACH GARDENS, FL 33410
PHONE: 561-775-4902 FAX: 561-775-4903

CERTIFICATION
MAR 23 2007
WARREN W. SCHAEFER, P.E.
P.E. NO. 44135

DRAWING NO. 1499
REV.
SHEET NO. 1 OF 11

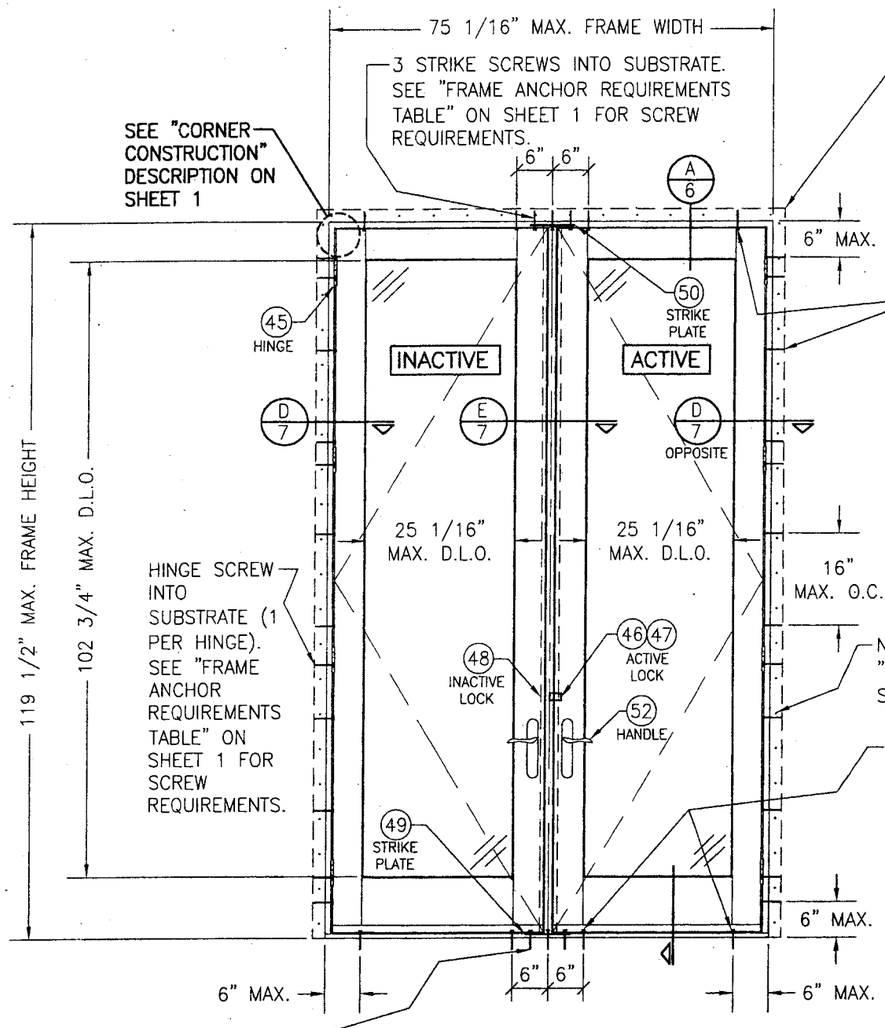

EXTERIOR ELEVATION
DOUBLE OUTSWING DOOR
SCALE: 1/2"=1'-0"

NAILING FIN IS REQUIRED WITH CLIP MOUNT CONDITION AND IS OPTIONAL & MAY BE REMOVED FOR A FRAME SHEAR SCREW MOUNT CONDITION. (NAIL FIN SHALL NOT ACT AS A SUBSTITUTE FOR THE FRAME SHEAR SCREWS SPECIFIED)

FRAME SHEAR SCREW OR INSTALLATION CLIP WHERE SHOWN. SEE "FRAME ANCHOR REQUIREMENTS TABLE" ON SHEET 1 FOR SCREW REQUIREMENTS. (5 AT HEAD WITH 3 AT MIDSPAN & 16" O.C.)

NAIL FIN ANCHORS WHERE SHOWN. SEE "FRAME ANCHOR REQUIREMENTS TABLE" ON SHEET 1 FOR SCREW/NAIL REQUIREMENTS.

SILL FRAME ANCHORS WHERE SHOWN. SEE "FRAME ANCHOR REQUIREMENTS TABLE" ON SHEET 1 FOR SCREW REQUIREMENTS (5 AT DOUBLE DOOR WITH 3 AT MIDSPAN & 2 AT SINGLE DOOR WHERE SHOWN).

NOTE: DOORS MAY BE FULLY GLAZED AS SHOWN, OR PARTIALLY PANELED. SEE SHEET 5 FOR PANELED DOOR CONDITION.

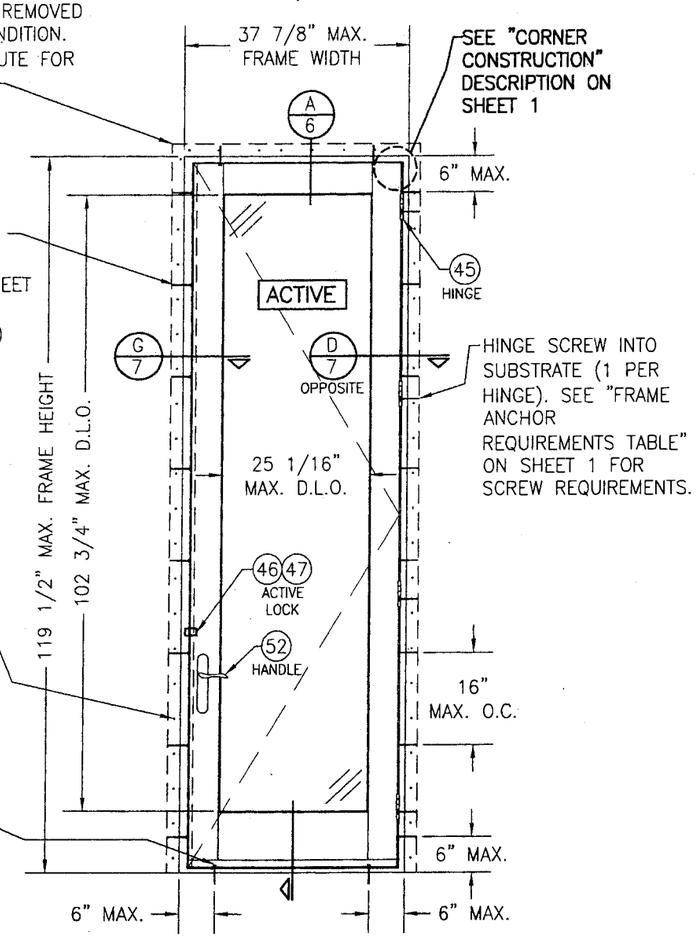

EXTERIOR ELEVATION
SINGLE OUTSWING DOOR
SCALE: 1/2"=1'-0"

ALLOWABLE DESIGN PRESSURE (RECTANGULAR OPERABLE DOORS)
SEE LOAD TABLES ON SHEET 1

PRODUCT REVISED
as complying with the Florida Building Code
Acceptance No 07-0914.01
Expiration Date 05/16/2012
By
Miami-Dade Product Control Division

Approved as complying with the Florida Building Code
Date 05/17/2007
NOA# 06-1228.02
Miami Dade Product Control Division
By

DRAWN BY: W.R.M.	CHECKED BY: W.W.S.
PLOT: 1=24	DATE: 11/8/06

NO.	REVISION DESCRIPTION	BY	DATE

DRAWING TITLE
ARCHITECT SERIES 10 FT. ALUMINUM CLAD IMPACT OUTSWING FRENCH DOORS

MANUFACTURER
PELLA CORPORATION
102 MAIN STREET
PELLA, IA 50219
641-621-1000

CONSULTANTS
W. W. SCHAEFER ENGINEERING & CONSULTING, P.A.
8895 N. MILITARY TRAIL; SUITE C-204
PALM BEACH GARDENS, FL 33410
PHONE: 561-775-4902 FAX: 561-775-4903

CERTIFICATION
MAR 23 2007
WARREN W. SCHAEFER, P.E.
P.E. NO. 44135

DRAWING NO.	REV.
1499	

SHEET NO.
2 OF 11

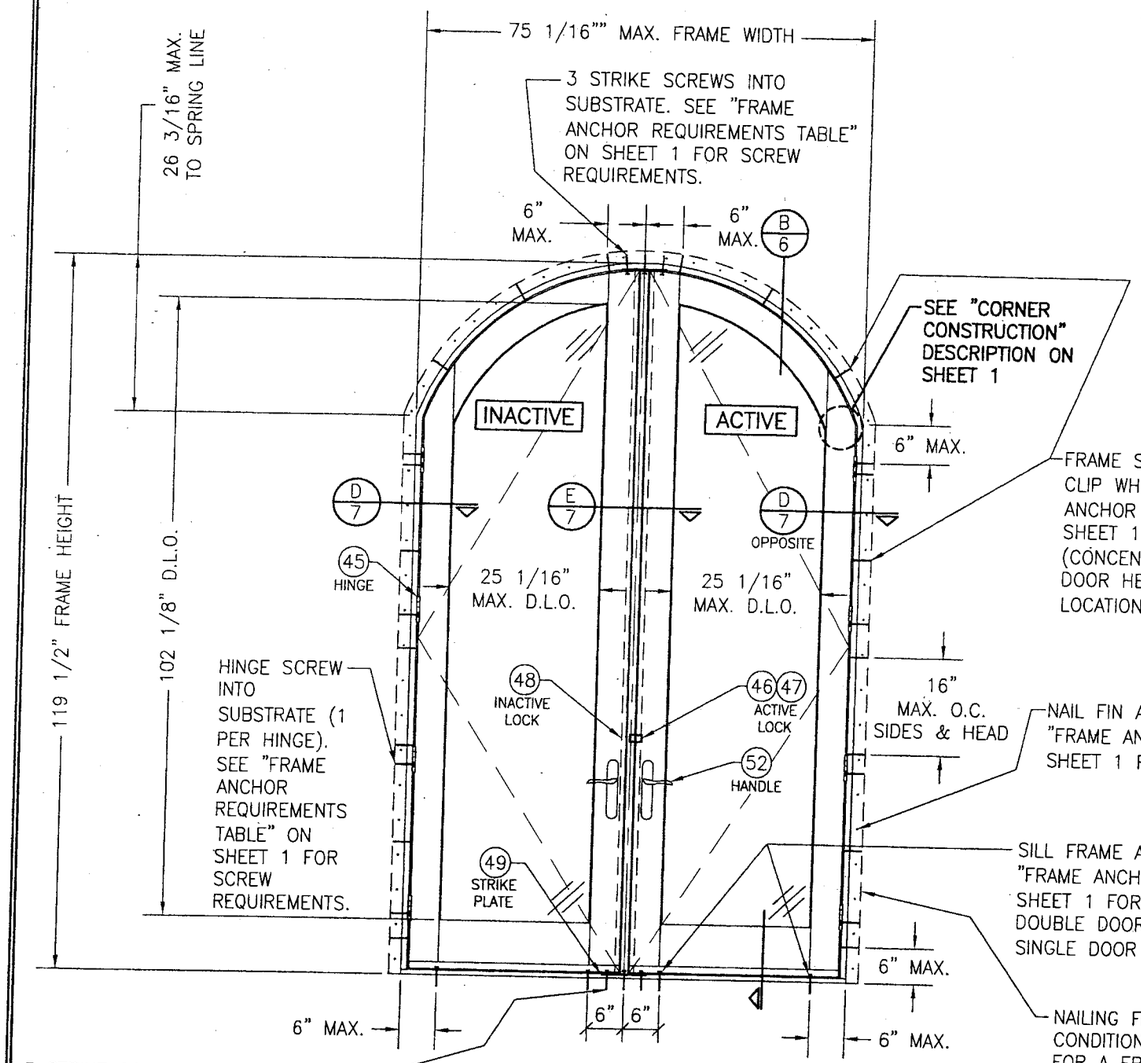

EXTERIOR ELEVATION
DOUBLE EYEBROW OUTSWING DOOR
SCALE: 1/2"=1'-0"

NOTE: DOORS MAY BE FULLY GLAZED AS SHOWN, OR PARTIALLY PANELED. SEE SHEET 5 FOR PANELED DOOR CONDITION.

FRAME SHEAR SCREW OR INSTALLATION CLIP WHERE SHOWN. SEE "FRAME ANCHOR REQUIREMENTS TABLE" ON SHEET 1 FOR SCREW REQUIREMENTS. (CONCENTRATE 3 AT PEAK OF DOUBLE DOOR HEAD JAMB AT LOCK STRIKE LOCATION AS SHOWN.)

NAIL FIN ANCHORS WHERE SHOWN. SEE "FRAME ANCHOR REQUIREMENTS TABLE" ON SHEET 1 FOR SCREW/NAIL REQUIREMENTS.

SILL FRAME ANCHORS WHERE SHOWN. SEE "FRAME ANCHOR REQUIREMENTS TABLE" ON SHEET 1 FOR SCREW REQUIREMENTS (5 AT DOUBLE DOOR WITH 3 AT MIDSPAN & 2 AT SINGLE DOOR WHERE SHOWN).

NAILING FIN IS REQUIRED WITH CLIP MOUNT CONDITION AND IS OPTIONAL & MAY BE REMOVED FOR A FRAME SHEAR SCREW MOUNT CONDITION. (NAIL FIN SHALL NOT ACT AS A SUBSTITUTE FOR THE FRAME SHEAR SCREWS SPECIFIED)

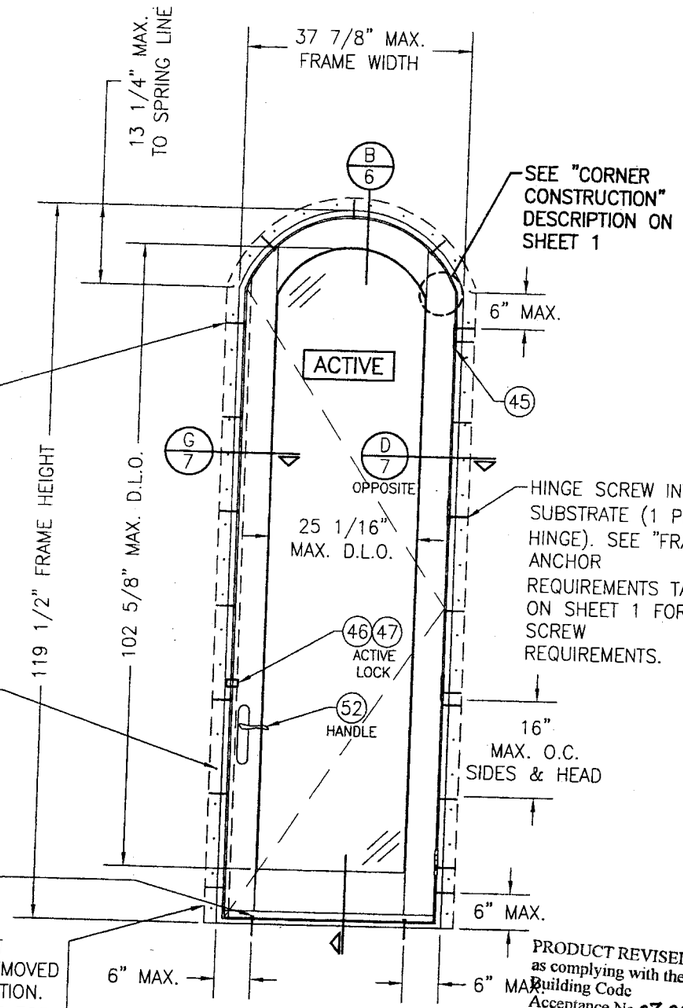

PRODUCT REVISED
as complying with the Florida Building Code
Acceptance No 07-0914.01
Expiration Date 05/16/2012
By
Miami-Dade Product Control Division

EXTERIOR ELEVATION
SINGLE EYEBROW OUTSWING DOOR
SCALE: 1/2"=1'-0"

ALLOWABLE DESIGN PRESSURE (EYEBROW/ARCH TOP OPERABLE DOORS)
+/-50 PSF (ALL SIZES)

Approved as complying with the Florida Building Code
Date 05/17/2007
NOA# 06-1228.04
Miami Dade Product Control Division
By

DRAWN BY: W.R.M.	CHECKED BY: W.W.S.
PLOT: 1=24	DATE: 11/8/06

NO.	REVISION DESCRIPTION	BY	DATE

DRAWING TITLE
ARCHITECT SERIES 10 FT. ALUMINUM CLAD IMPACT OUTSWING FRENCH DOORS

MANUFACTURER
PELLA CORPORATION
102 MAIN STREET
PELLA, IA 50219
641-621-1000

CONSULTANTS
W. W. SCHAEFER ENGINEERING & CONSULTING, P.A.
8895 N. MILITARY TRAIL; SUITE C-204
PALM BEACH GARDENS, FL 33410
PHONE: 561-775-4902 FAX: 561-775-4903

CERTIFICATION
MAR 23 2007
WARREN W. SCHAEFER, P.E.
P.E. NO. 44135

DRAWING NO. 1499
REV.
SHEET NO. 3 OF 11

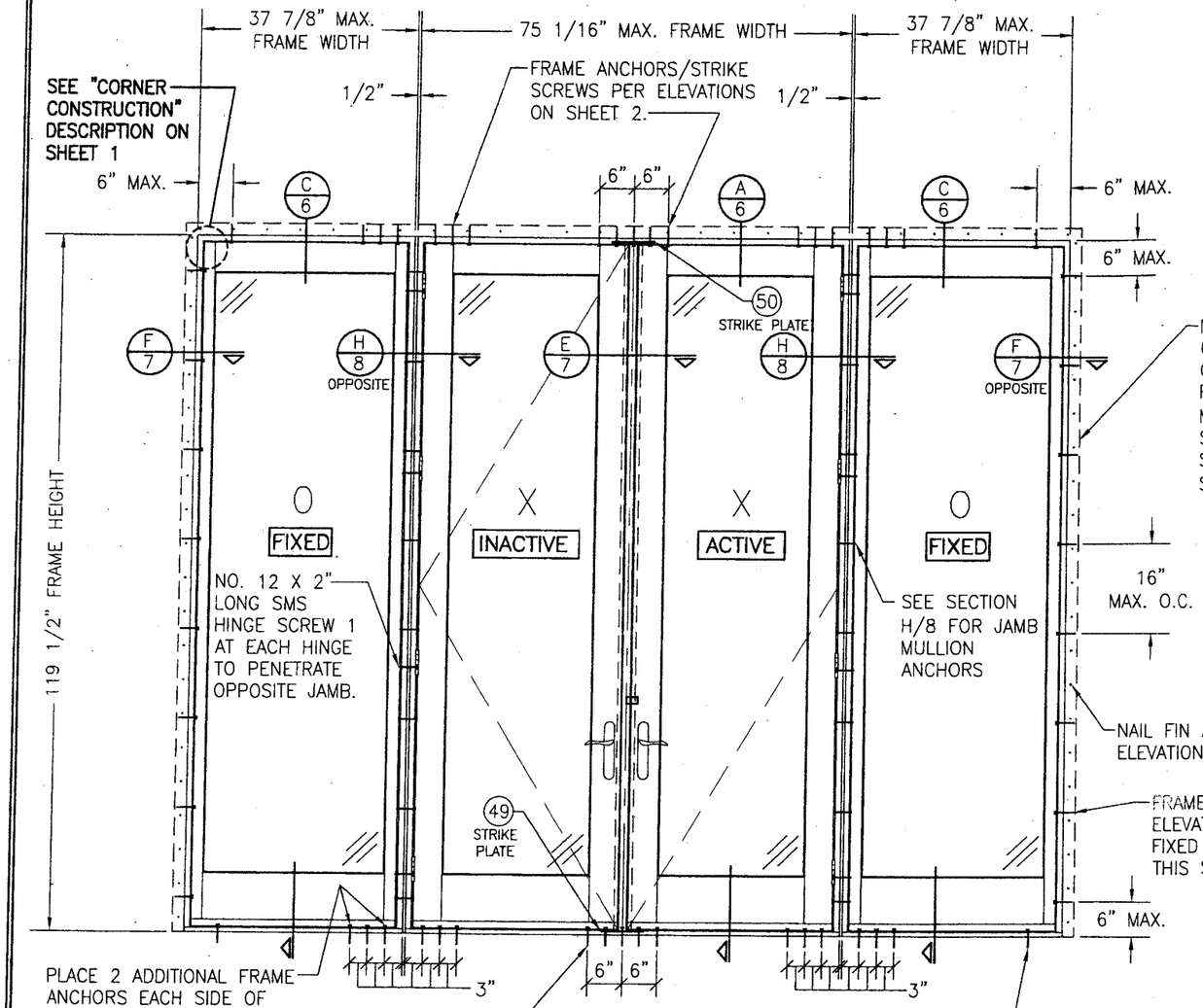

EXTERIOR ELEVATION
DOUBLE OUTSWING DOOR WITH SIDELIGHTS

SCALE: 1/2" = 1'-0"

NOTE: OXXO DOOR SHOWN. ALL OTHER 4-PANEL CONFIGURATIONS OF SINGLE/DOUBLE DOORS & SIDELIGHTS ALSO APPLY.
(FOR ALL DETAIL NOT SHOWN, SEE INDIVIDUAL UNIT ELEVATIONS)

NOTE: DOORS MAY BE FULLY GLAZED AS SHOWN, OR PARTIALLY PANELED. SEE SHEET 5 FOR PANELED DOOR CONDITION.

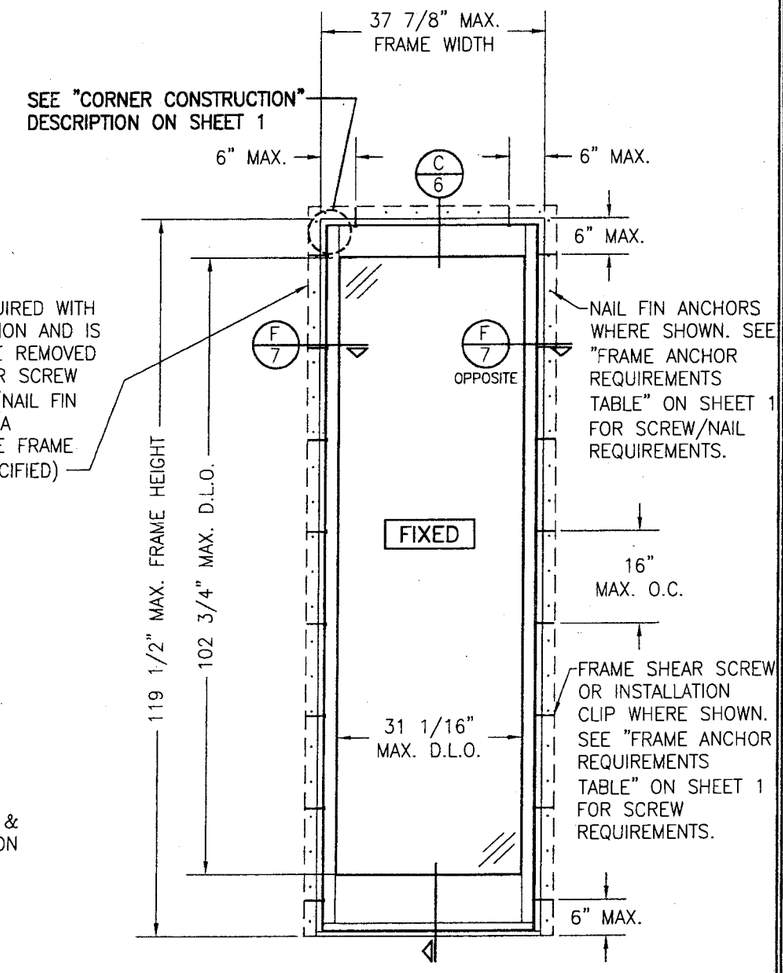

EXTERIOR ELEVATION
SINGLE FIXED PANEL

SCALE: 1/2"=1'-0"

ALLOWABLE DESIGN PRESSURE
SEE LOAD TABLES ON SHEET 1

PRODUCT REVISED
as complying with the Florida Building Code
Acceptance No. 07-0914.01
Expiration Date 05/16/2012
By
Miami Dade Product Control Division

Approved as complying with the Florida Building Code
Date 05/17/2007
NOA# 06-1228.04
Miami Dade Product Control Division
By

DRAWN BY: W.R.M.	CHECKED BY: W.W.S.
PLOT: 1=24	DATE: 11/8/06

NO.	REVISION DESCRIPTION	BY	DATE

DRAWING TITLE
ARCHITECT SERIES 10 FT. ALUMINUM CLAD IMPACT OUTSWING FRENCH DOORS

MANUFACTURER
PELLA CORPORATION
102 MAIN STREET
PELLA, IA 50219
641-621-1000

CONSULTANTS
W. W. SCHAEFER ENGINEERING & CONSULTING, P.A.
8895 N. MILITARY TRAIL; SUITE C-204
PALM BEACH GARDENS, FL 33410
PHONE: 561-775-4902 FAX: 561-775-4903

CERTIFICATION
MAR 23 2007
WARREN W. SCHAEFER, P.E.
P.E. NO. 44135

DRAWING NO. 1499
REV.
SHEET NO. 4 OF 11

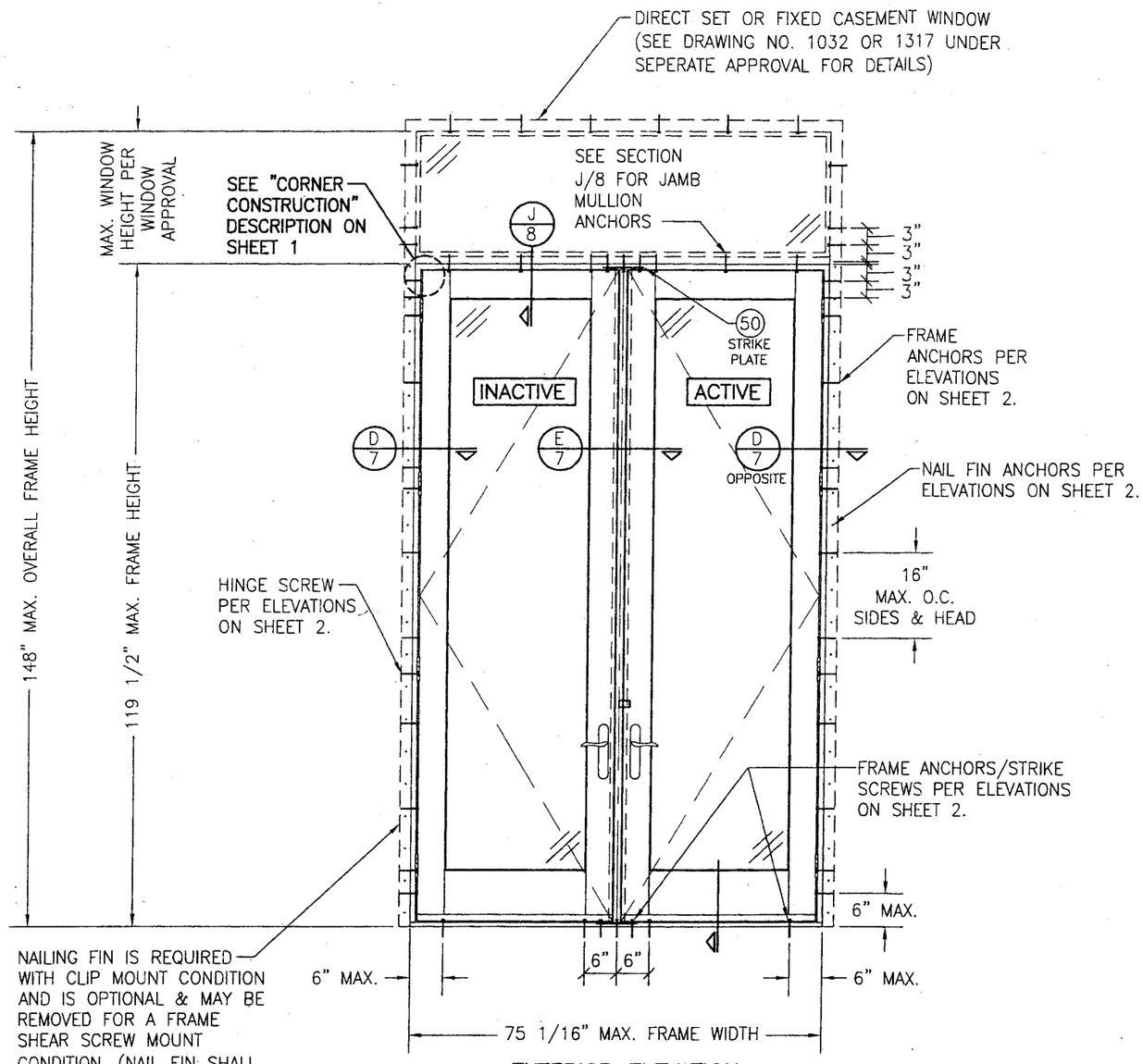

EXTERIOR ELEVATION
DOUBLE OUTSWING DOOR WITH TRANSOM

SCALE: 1/2"=1'-0"

DOORS MAY BE DOUBLE OR SINGLE PANEL
(FOR ALL DETAIL NOT SHOWN, SEE INDIVIDUAL UNIT ELEVATIONS)

NOTE: DOORS MAY BE FULLY GLAZED AS SHOWN, OR PARTIALLY PANELED. SEE THIS SHEET FOR PANELED DOOR CONDITION.

ALLOWABLE DESIGN PRESSURE
SEE LOAD TABLES ON SHEET 1

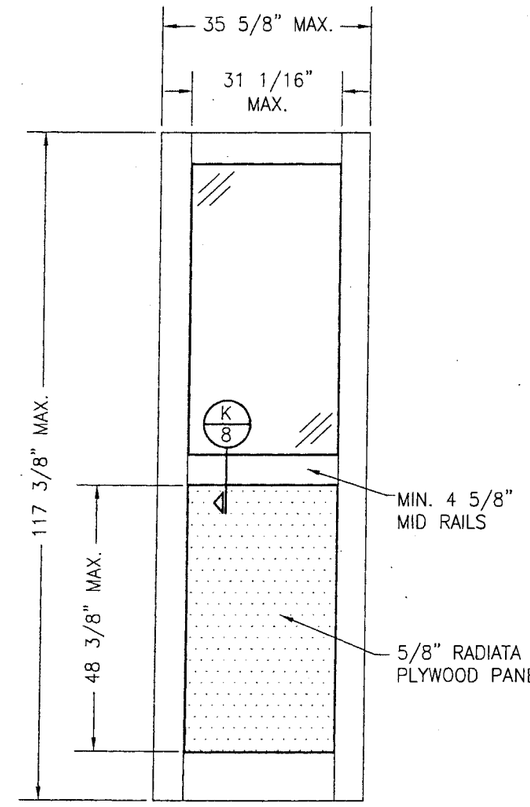

EXTERIOR ELEVATION
PARTIAL PANEL
WITH STANDARD MID RAIL

SCALE: 1/2"=1'-0"

NOTES:
1) MULTIPLE MIDRAILS MAY BE USED HORIZONTALLY OR VERTICALLY
2) PANEL CONDITION IS APPLICABLE TO BOTH OPERABLE & FIXED PANELS

PRODUCT REVISED
as complying with the Florida Building Code
Acceptance No 07-0914.01
Expiration Date 05/16/2012
By
Miami Dade Product Control Division

Approved as complying with the Florida Building Code
Date 05/17/2007
NOA# 06-1228.04
Miami Dade Product Control Division
By

DRAWN BY: W.R.M.	CHECKED BY: W.W.S.
PLOT: 1=24	DATE: 11/8/06

NO.	REVISION DESCRIPTION	BY	DATE

DRAWING TITLE
ARCHITECT SERIES 10 FT. ALUMINUM CLAD IMPACT OUTSWING FRENCH DOORS

MANUFACTURER
PELLA CORPORATION
102 MAIN STREET
PELLA, IA 50219
641-621-1000

CONSULTANTS
W. W. SCHAEFER ENGINEERING & CONSULTING, P.A.
8895 N. MILITARY TRAIL, SUITE C-204
PALM BEACH GARDENS, FL 33410
PHONE: 561-775-4902 FAX: 561-775-4903

CERTIFICATION
MAR 23 2007
WARREN W. SCHAEFER, P.E.
P.E. NO. 44135

DRAWING NO. 1499
REV.
SHEET NO. 5 OF 11

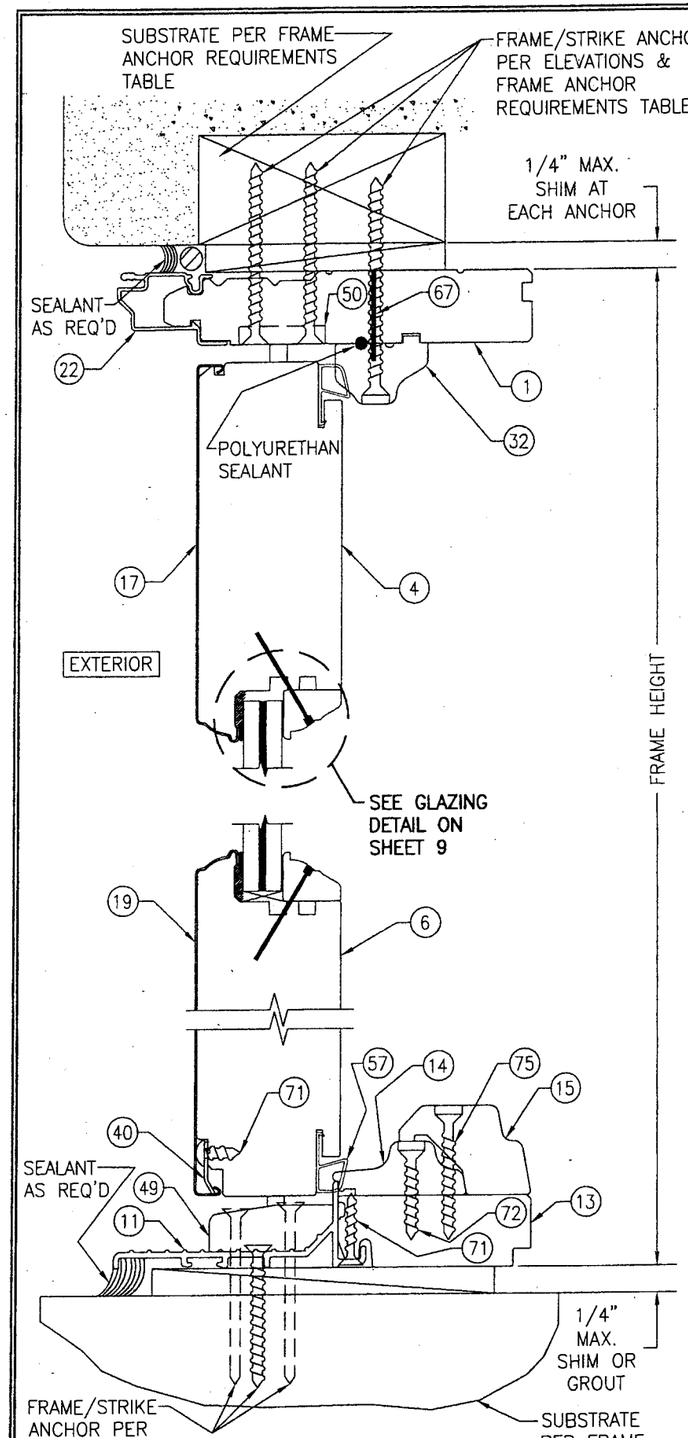

SECTION A/6
SCALE: 1/2 FULL
(RECTANGLE DOOR)

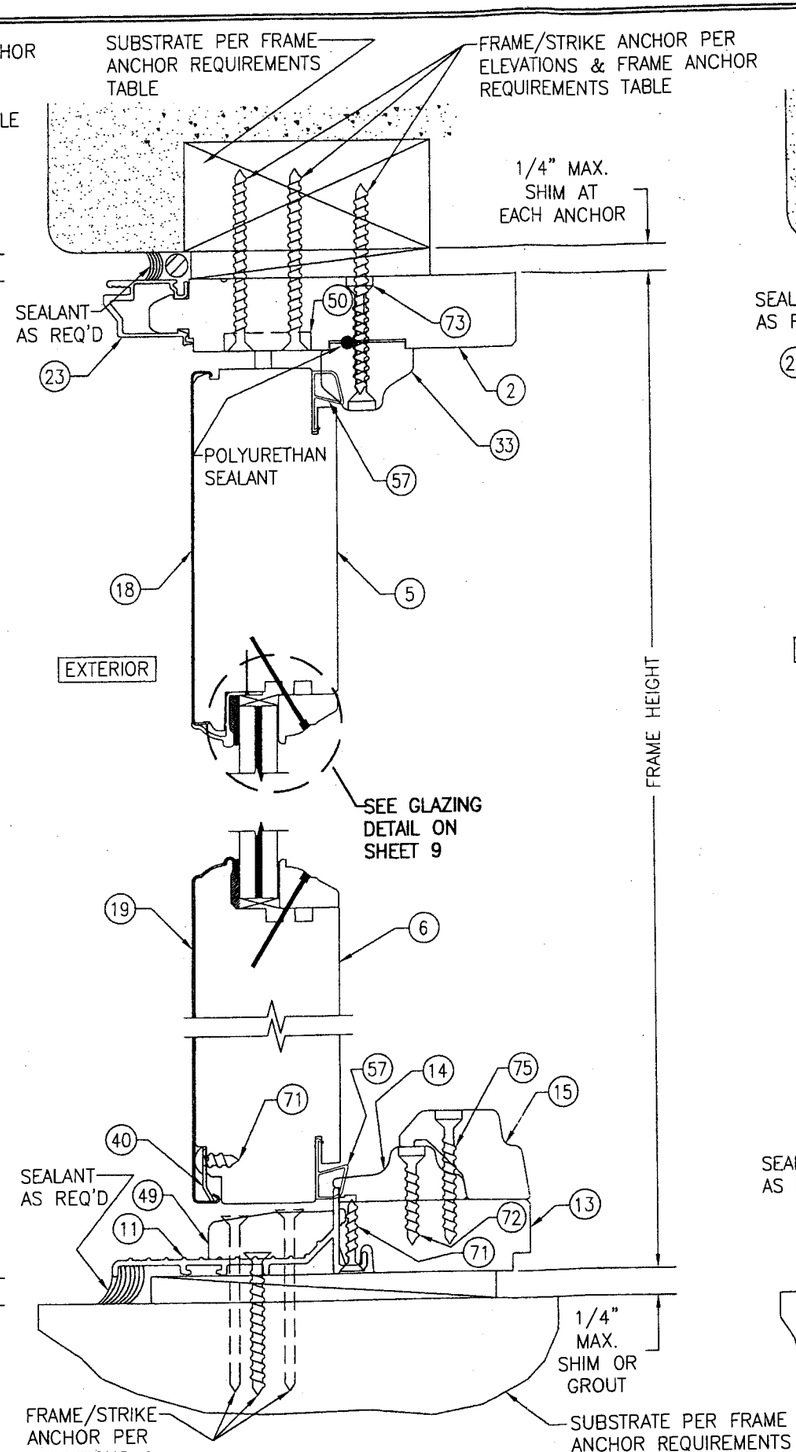

SECTION B/6
SCALE: 1/2 FULL
(RADIUS DOOR)

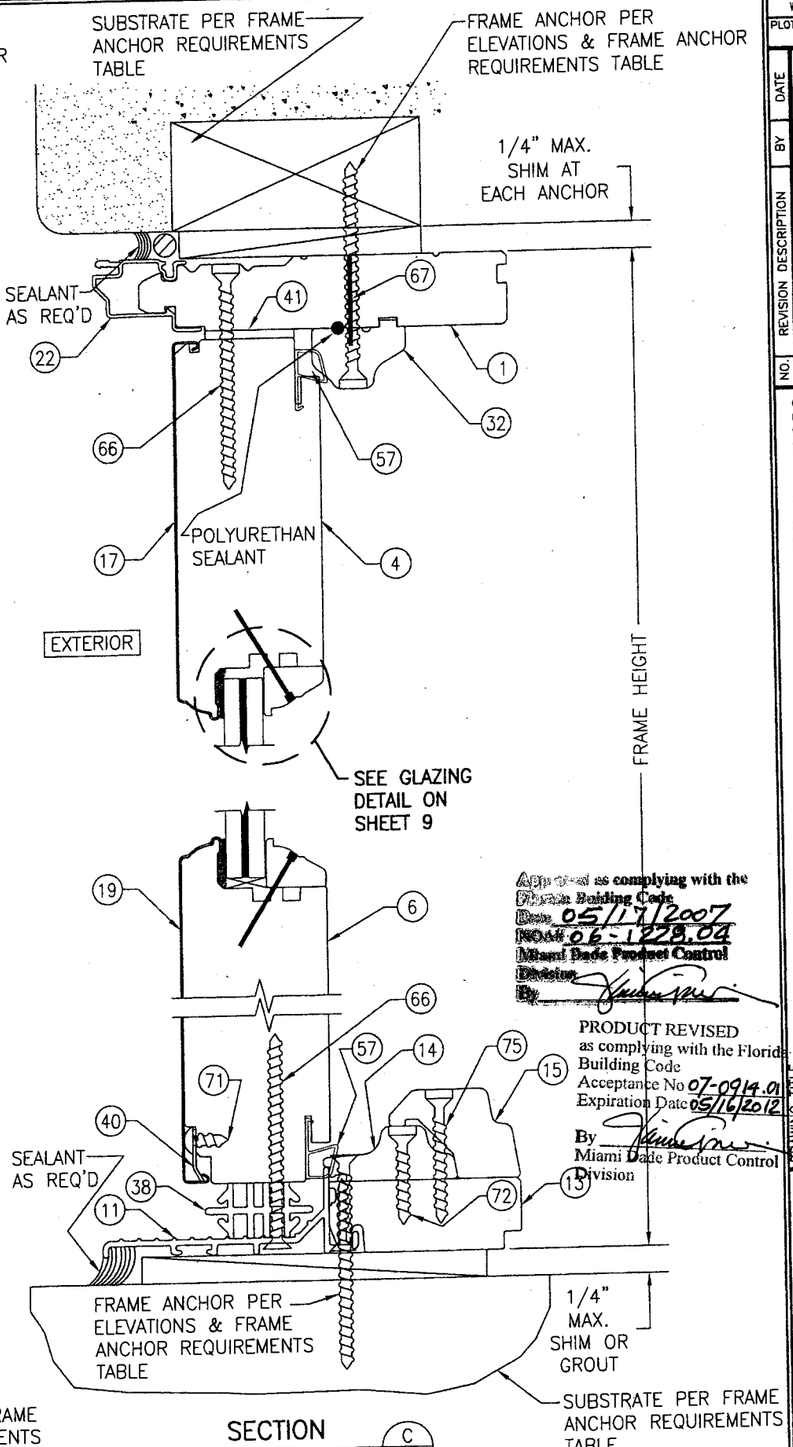

SECTION C/6
SCALE: 1/2 FULL

Approved as complying with the Florida Building Code
Date 05/17/2007
NOA# 06-1228.04
Miami Dade Product Control Division
By

PRODUCT REVISED
as complying with the Florida Building Code
Acceptance No 07-0914.01
Expiration Date 05/16/2012
By
Miami Dade Product Control Division

NO.	REVISION DESCRIPTION	BY	DATE

DRAWN BY: W.R.M.
CHECKED BY: W.W.S.
PLOT: 1=2
DATE: 11/08/06

DRAWING TITLE
ARCHITECT SERIES ALUMINUM CLAD IMPACT OUTSWING FRENCH DOORS

MANUFACTURER
PELLA CORPORATION
102 MAIN STREET
PELLA, IA 50219
641-621-1000

CONSULTANTS
W. W. SCHAEFER ENGINEERING & CONSULTING, P.A.
8895 N. MILITARY TRAIL: SUITE C-204
PALM BEACH GARDENS, FL 33410
PHONE: 561-775-4902 FAX: 561-775-4903

CERTIFICATION
MAR 23 2007
WARREN W. SCHAEFER, P.E.
P.E. NO. 44135

DRAWING NO. 1499
REV.
SHEET NO. 6 OF 11

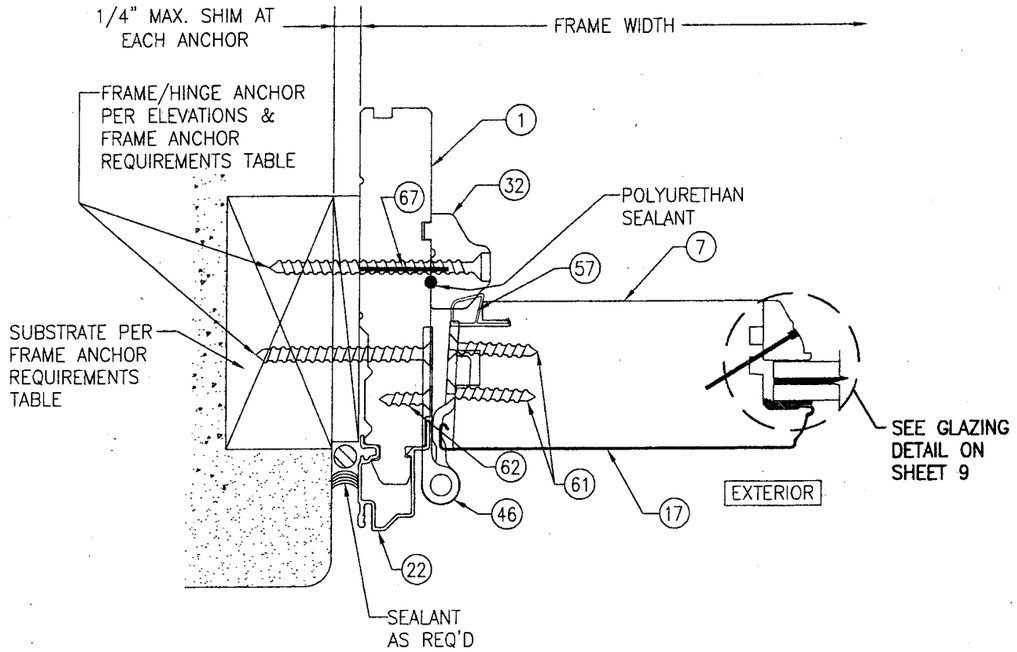

SECTION D/7
SCALE: 1/2 FULL

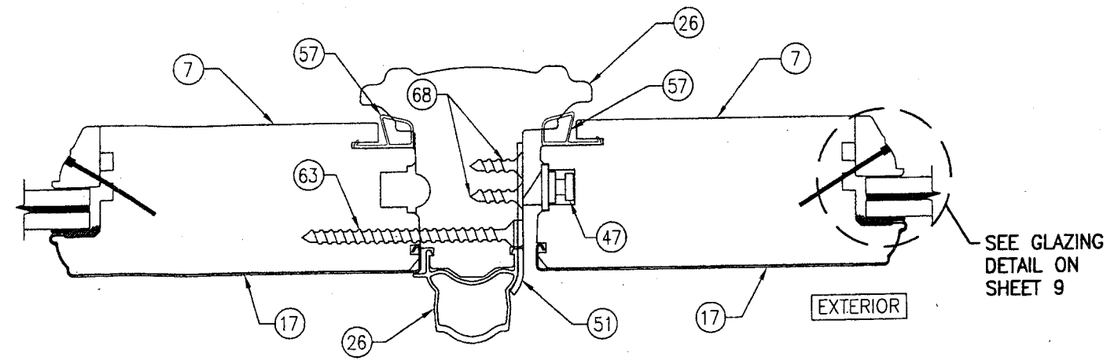

SECTION E/7
SCALE: 1/2 FULL

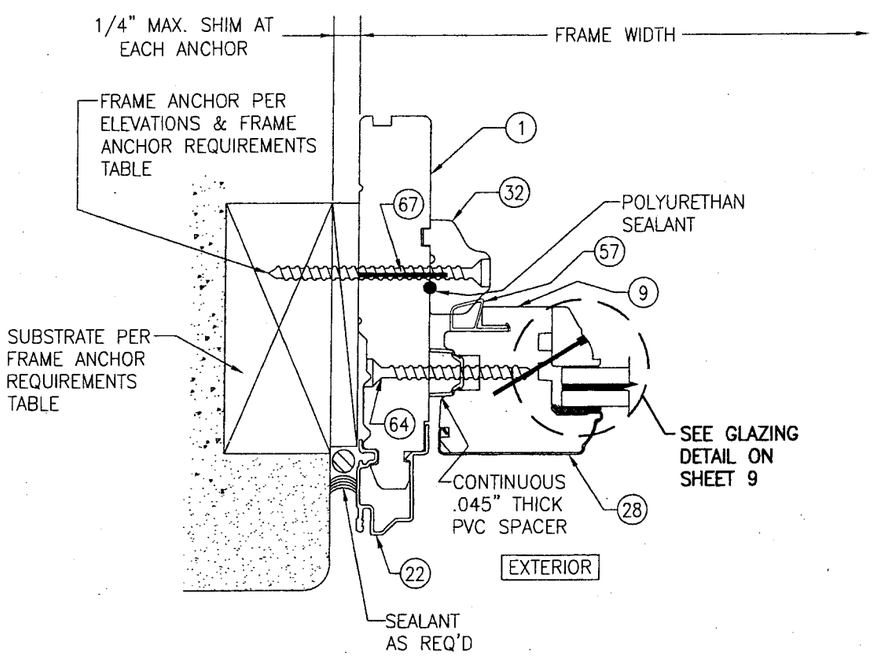

SECTION F/7
SCALE: 1/2 FULL

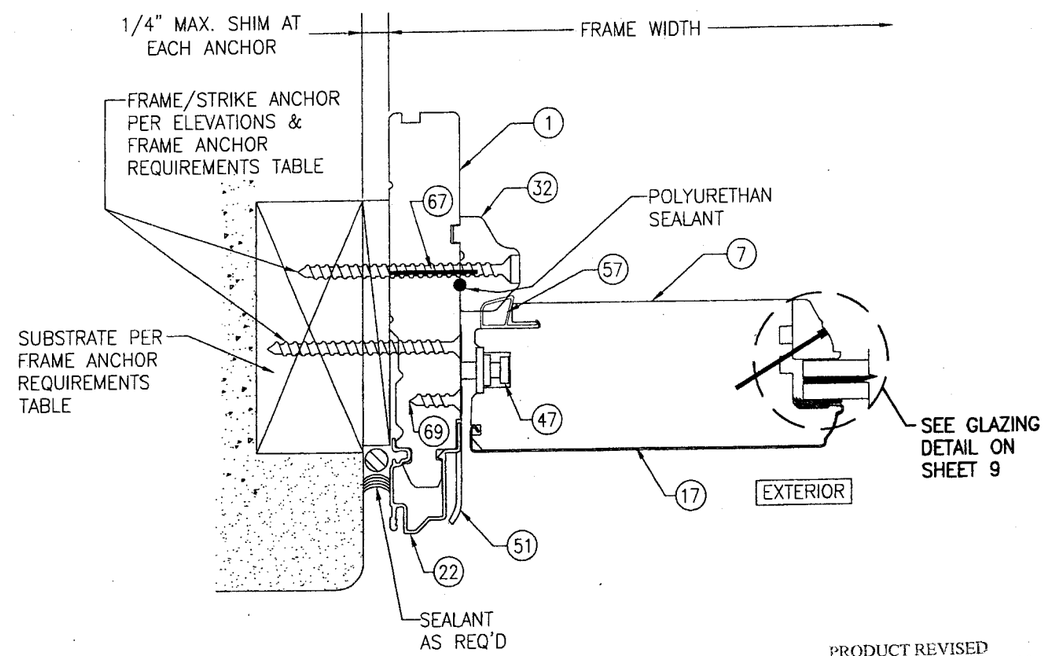

SECTION G/7
SCALE: 1/2 FULL

PRODUCT REVISED
as complying with the Florida Building Code
Acceptance No 07-0914.01
Expiration Date 05/16/2012
By
Miami Dade Product Control Division

Approved as complying with the Florida Building Code
Date 05/17/2007
NOA# 06-1228.04
Miami Dade Product Control Division
By

DRAWN BY: W.R.M.	CHECKED BY: W.W.S.
PLOT: 1=2	DATE: 11/08/06

NO.	REVISION DESCRIPTION	BY	DATE

DRAWING TITLE
ARCHITECT SERIES ALUMINUM CLAD IMPACT OUTSWING FRENCH DOORS

MANUFACTURER
PELLA CORPORATION
102 MAIN STREET
PELLA, IA 50219
641-621-1000

CONSULTANTS
W. W. SCHAEFER ENGINEERING & CONSULTING, P.A.
8895 N. MILITARY TRAIL: SUITE C-204
PALM BEACH GARDENS, FL 33410
PHONE: 561-775-4902 FAX: 561-775-4903

CERTIFICATION
MAR 2 3 2007
WARREN W. SCHAEFER, P.E.
P.E. NO. 44135

DRAWING NO. 1499
REV.
SHEET NO. 7 OF 11

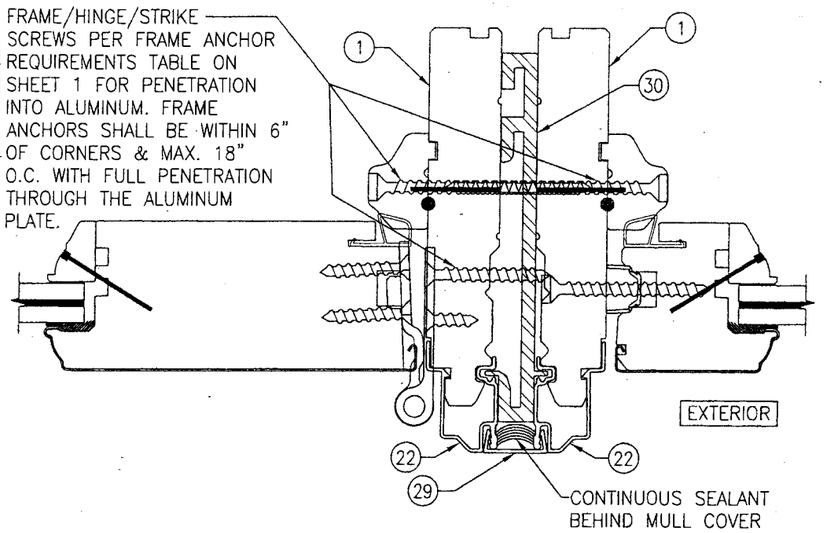

SECTION H/8
SCALE: 1/2 FULL
FOR DETAILS NOT SHOWN SEE OTHER SECTIONS

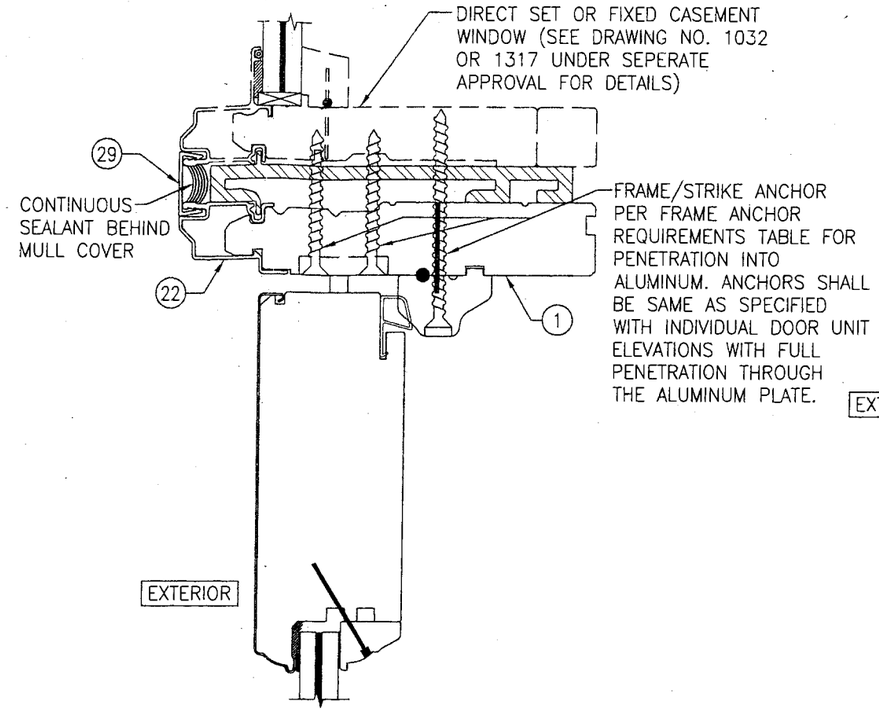

SECTION J/8
SCALE: 1/2 FULL
FOR DETAILS NOT SHOWN SEE OTHER SECTIONS

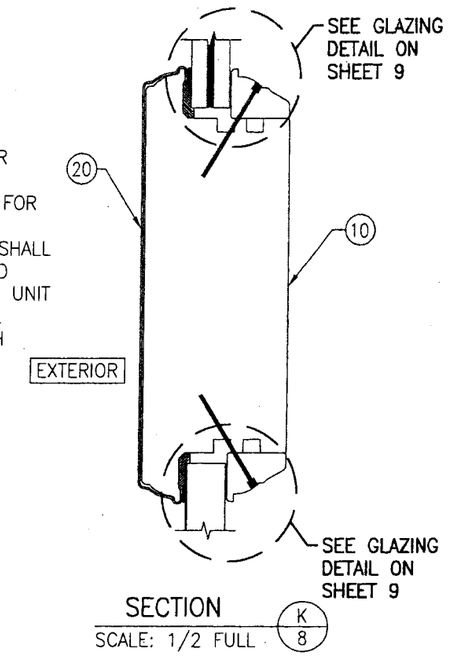

SECTION K/8
SCALE: 1/2 FULL

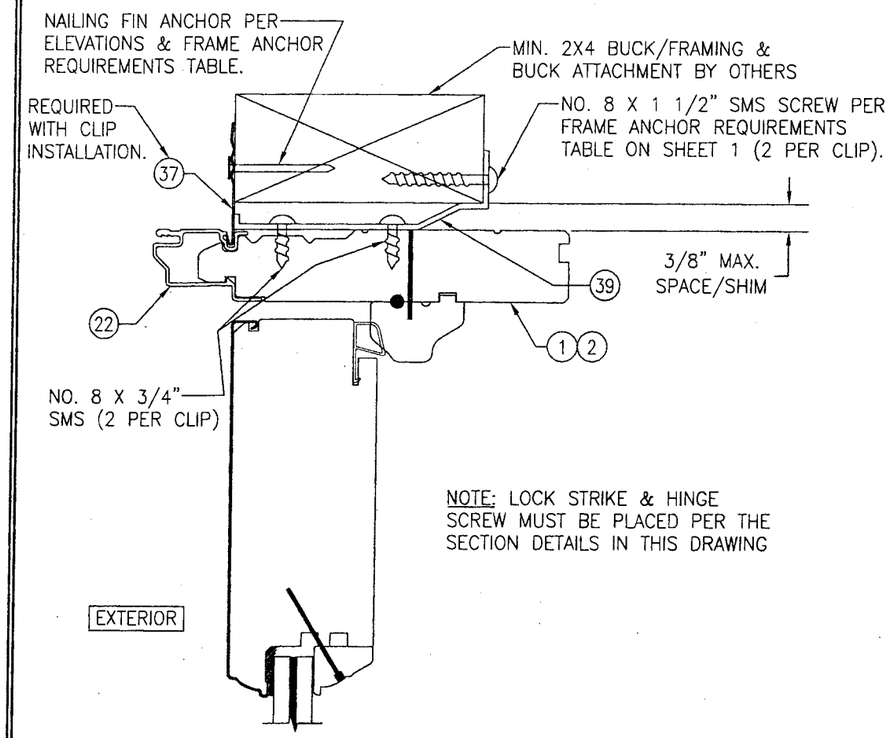

NOTE: LOCK STRIKE & HINGE SCREW MUST BE PLACED PER THE SECTION DETAILS IN THIS DRAWING

OPTIONAL CLIP MOUNT DETAIL AT HEAD AND SIDES
(HEAD SECTION SHOWN, SIDES ARE INSTALLED THE SAME.)
(FOR DETAIL NOT SHOWN, SEE OTHER SECTIONS.)

PRODUCT REVISED
as complying with the Florida Building Code
Acceptance No 07-0914.01
Expiration Date 05/16/2012
By
Miami Dade Product Control Division

Approved as complying with the Florida Building Code
Date 05/17/2007
NOA# 06-1228.04
Miami Dade Product Control Division
By

DRAWN BY: W.R.M.	CHECKED BY: W.W.S.
PLOT: 1=2	DATE: 11/08/06

NO.	REVISION DESCRIPTION	BY	DATE

DRAWING TITLE
ARCHITECT SERIES ALUMINUM CLAD IMPACT OUTSWING FRENCH DOORS

MANUFACTURER
PELLA CORPORATION
102 MAIN STREET
PELLA, IA 50219
641-621-1000

CONSULTANTS
W. W. SCHAEFER ENGINEERING & CONSULTING, P.A.
8895 N. MILITARY TRAIL: SUITE C-204
PALM BEACH GARDENS, FL 33410
PHONE: 561-775-4902 FAX: 561-775-4903

CERTIFICATION
MAR 23 2007
WARREN W. SCHAEFER, P.E.
P.E. NO. 44135

DRAWING NO. 1499
REV.
SHEET NO. 8 OF 11

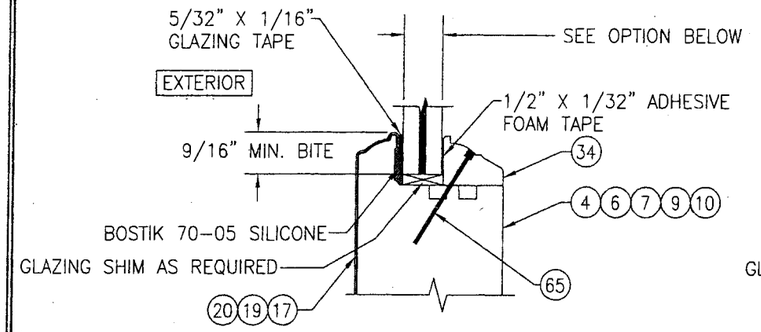

TYP. NON-I.G. GLAZING DETAIL (NON-RADIUS)

GLASS OPTION 1: 9/16" THICK LAMINATED GLASS (1/4" AN./0.09 DUPONT BUTACITE PVB/1/4" AN.)

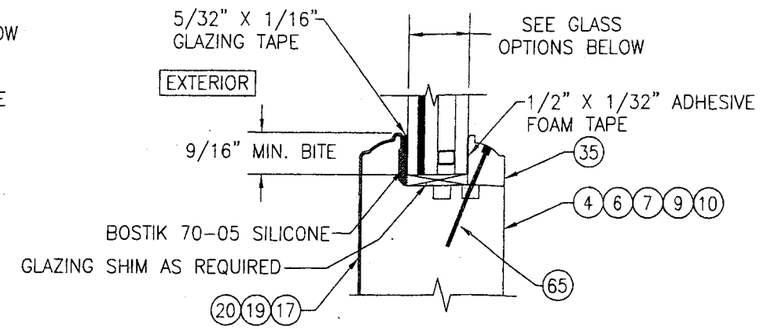

TYP. I.G. GLAZING DETAIL (NON-RADIUS)

GLASS OPTION 2: 7/8" THICK LAMINATED I.G. (3/16" TEMP. INTERIOR/1/4" AIR SPACE/3/16 AN./0.09 DUPONT BUTACITE PVB/3/16" AN. EXTERIOR)
GLASS OPTION 3: 7/8" THICK LAMINATED I.G. (3/16" TEMP. INTERIOR/5/16" AIR SPACE/1/8 AN./0.09 DUPONT BUTACITE PVB/1/8" AN. EXTERIOR)

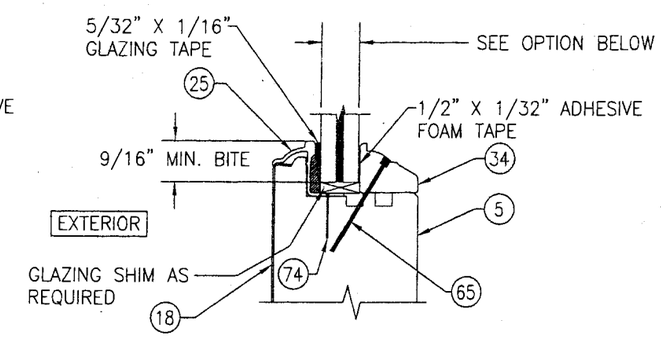

TYP. NON-I.G. GLAZING DETAIL (RADIUS)

GLASS OPTION 1: 9/16" THICK LAMINATED GLASS (1/4" AN./0.09 DUPONT BUTACITE PVB/1/4" AN.)

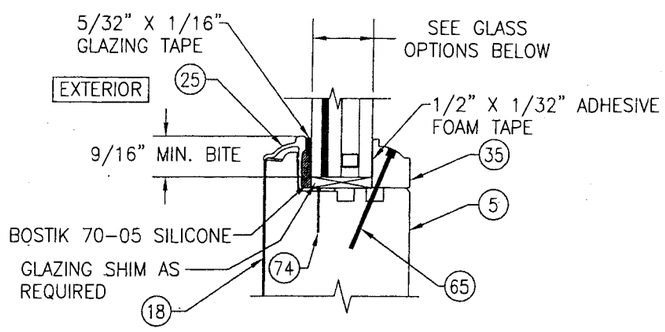

TYP. I.G. GLAZING DETAIL (RADIUS)

GLASS OPTION 2: 7/8" THICK LAMINATED I.G. (3/16" TEMP. INTERIOR/1/4" AIR SPACE/3/16 AN./0.09 DUPONT BUTACITE PVB/3/16" AN. EXTERIOR)
GLASS OPTION 3: 7/8" THICK LAMINATED I.G. (3/16" TEMP. INTERIOR/5/16" AIR SPACE/1/8 AN./0.09 DUPONT BUTACITE PVB/1/8" AN. EXTERIOR)

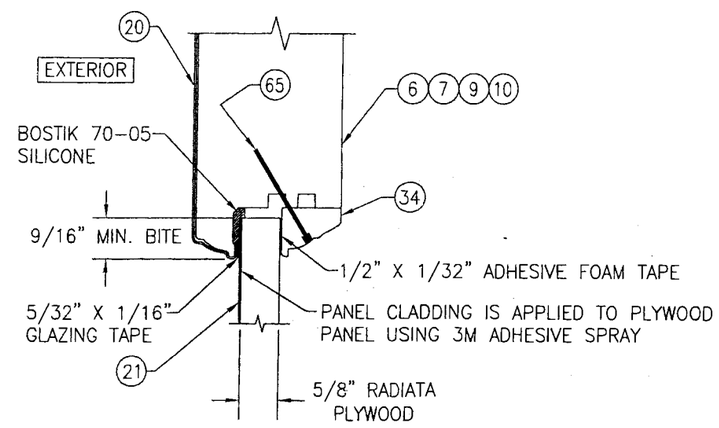

TYP. PANEL GLAZING DETAIL

NOTE: ADDITIONAL RAISED PANEL SECTIONS MAY BE ADHERED TO THE INTERIOR OF THE RADIATA PLYWOOD IF REQUIRED ARCHITECTURALLY

PRODUCT REVISED
as complying with the Florida
Building Code
Acceptance No 07-0914.01
Expiration Date 05/16/2012
By
Miami Dade Product Control
Division

Approved as complying with the Florida Building Code
Date 05/17/2007
NOA# 06-1228.04
Miami Dade Product Control Division
By

DRAWN BY: W.R.M.	CHECKED BY: W.W.S.
PLOT: 1=2	DATE: 11/08/06

NO.	REVISION DESCRIPTION	BY	DATE

DRAWING TITLE
ARCHITECT SERIES ALUMINUM CLAD IMPACT OUTSWING FRENCH DOORS

MANUFACTURER
PELLA CORPORATION
102 MAIN STREET
PELLA, IA 50219
641-621-1000

CONSULTANTS
W. W. SCHAEFER ENGINEERING & CONSULTING, P.A.
8895 N. MILITARY TRAIL; SUITE C-204
PALM BEACH GARDENS, FL 33410
PHONE: 561-775-4902 FAX: 561-775-4903

CERTIFICATION
MAR 23 2007
WARREN W. SCHAEFER, P.E.
P.E. NO. 44135

DRAWING NO. 1499
REV.
SHEET NO. 9 OF 11

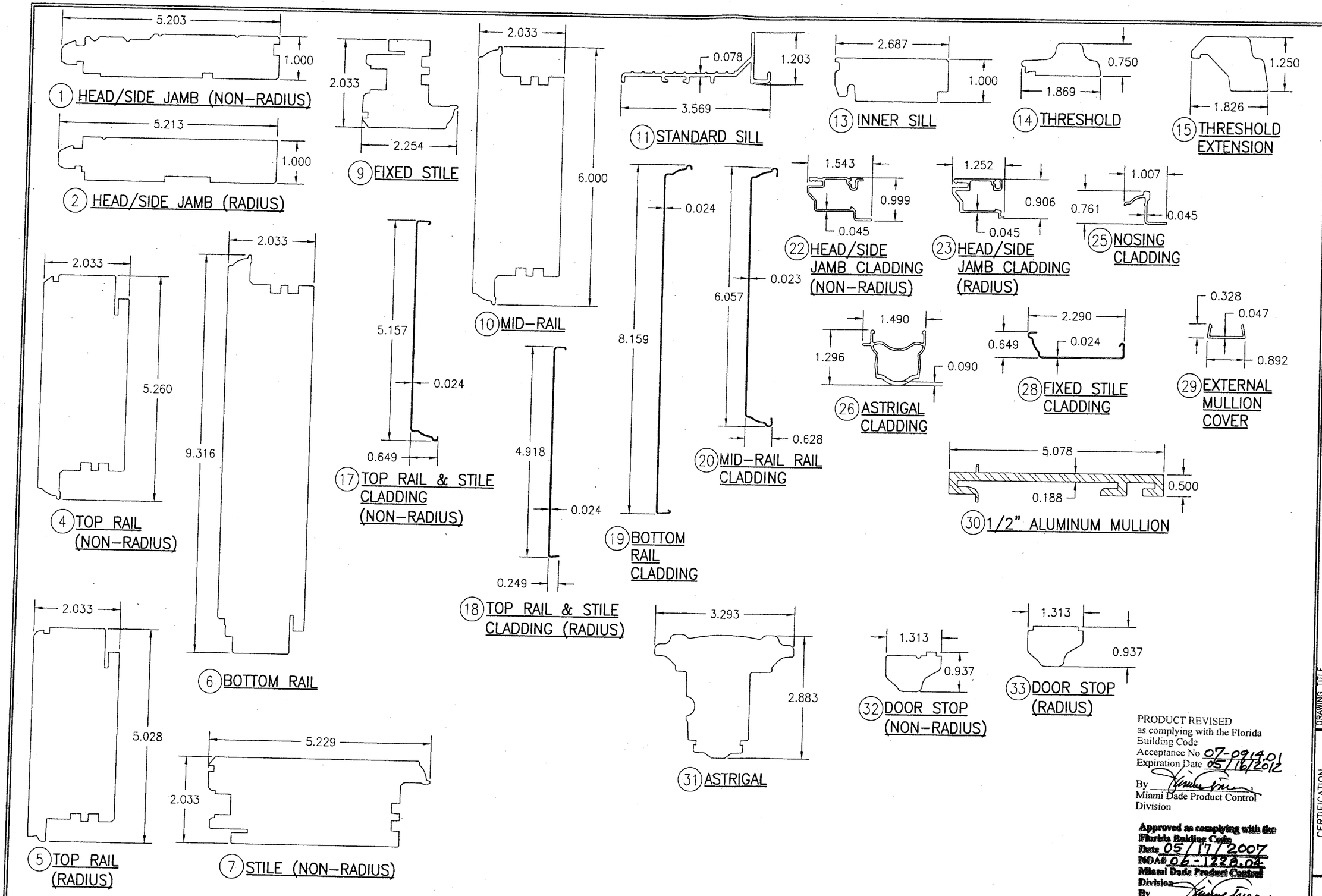

PRODUCT REVISED
as complying with the Florida
Building Code
Acceptance No 07-0914.01
Expiration Date 05/16/2012
By
Miami Dade Product Control
Division

Approved as complying with the
Florida Building Code
Date 05/17/2007
NOA# 06-1228.04
Miami Dade Product Control
Division
By

NO.	REVISION DESCRIPTION	BY	DATE

DRAWN BY: W.R.M.
CHECKED BY: W.W.S.
PLOT: 1=2
DATE: 11/08/06

DRAWING TITLE
ARCHITECT SERIES ALUMINUM CLAD IMPACT OUTSWING FRENCH DOORS

MANUFACTURER
PELLA CORPORATION
102 MAIN STREET
PELLA, IA 50219
641-621-1000

CONSULTANTS
W. W. SCHAEFER ENGINEERING & CONSULTING, P.A.
8895 N. MILITARY TRAIL; SUITE C-204
PALM BEACH GARDENS, FL 33410
PHONE: 561-775-4902 FAX: 561-775-4903

CERTIFICATION
MAR 23 2007
WARREN W. SCHAEFER, P.E.
P.E. NO. 44135

DRAWING NO. 1499
REV.
SHEET NO. 10 OF 11

ITEM #	PART #	ITEM DESCRIPTION	MANUFACTURER/NOTES
		PARTS	
1	1AZT	HEAD/SIDE JAMB (NON-RADIUS)	WESTERN PINE
2	35KA	HEAD/SIDE JAMB (RADIUS)	WESTERN PINE
4	388K	TOP RAIL (NON-RADIUS)	WESTERN PINE
5	38EA	TOP RAIL (RADIUS)	WESTERN PINE
6	388G	BOTTOM RAIL	WESTERN PINE
7	388P	STILE (NON-RADIUS)	WESTERN PINE
9	389T	FIXED STILE	WESTERN PINE
10	38LA	MID-RAIL	WESTERN PINE
11	72TW	STANDARD SILL	6063-T6 ALUMINUM
13	332Z	INNER SILL	WESTERN PINE
14	301A	THRESHOLD	WESTERN PINE
15	301C	THRESHOLD EXTENSION	WESTERN PINE
17	426OJ	TOP RAIL & STILE CLADDING (NON-RADIUS)	3003-H14 ALUMINUM
18	MS0131	TOP RAIL (RADIUS)	3003-H14 ALUMINUM
19	426D	BOTTOM RAIL CLADDING	3003-H14 ALUMINUM
20	427A	MID-RAIL CLADDING	3003-H14 ALUMINUM
21	MS0131	PANEL CLADDING	3003-H14 ALUMINUM
22	741Q	HEAD/SIDE JAMB CLADDING (NON-RADIUS)	6063-T6 ALUMINUM
23	72LB	HEAD/SIDE JAMB CLADDING (RADIUS)	6063-T6 ALUMINUM
25	OSDA	NOSING CLAD (REQ. WITH RAD. HEAD & STILE)	6063-T6 ALUMINUM
26	72Z2	ASTRAGAL CLADDING	3003-H14 ALUMINUM
28	426M	FIXED STILE CLADDING	3003-H14 ALUMINUM
29	736M	EXTERNAL MULLION COVER	6063-T6 ALUMINUM
30	OA6K	1/2" ALUMINUM MULLION	6061-T6 ALUMINUM
31	039G	ASTRAGAL	WESTERN PINE
32	334E	DOOR STOP (NON-RADIUS)	WESTERN PINE
33	336A	DOOR STOP (RADIUS)	WESTERN PINE
34	283S	NON-I.G. GLASS STOP	WESTERN PINE
35	283T	I.G. GLASS STOP	WESTERN PINE
37	42G7	NAIL FIN	3003-H14 ALUMINUM
38	754S	FIXED SILL SHIM	POLYONE GEON 06935 RIGID PVC
39	5071	FRAME CLIP	50 KSI GALVINIZED STEEL
40	690G	SPRING CLIP	300 SERIES STAINLESS STEEL
41	753T	SHIM	AS REQUIRED
		HARDWARE	
45	130H	4 1/2" 6063-T6 ALUMINUM HINGE	PELLA (WITH S.S. PIN)
46	0380M	3-POINT ACTIVE LOCK SYSTEM	AMESBURY BSI (USED WITH DOORS 95 1/2" TALL & SHORTER)
47	0380M	5-POINT ACTIVE LOCK SYSTEM	AMESBURY BSI (USED WITH DOORS TALLER THAN 95 1/2"
48	0380P	2-POINT INACTIVE LOCK SYSTEM	AMESBURY BSI
49	778P	SILL STRIKE PLATE (3.968" X 1.196" X 0.188")	DELRIN 500P
50	710X	HEAD STRIKE PLATE (3.688" X 1.746" X 0.641")	(6061-T6 ALUMINUM)
51	50A2	JAMB STRIKE PLATE (6.375" X 2.089" X .075")	PELLA (BRASS)
52	14E6	HANDLE	AS REQUIRED TO OPERATE LOCK
		SEALS & SEALANTS	
57	1B2T	PANEL WEATHERSTRIP	SANTOPRENE

ITEM #		ITEM DESCRIPTION	MANUFACTURER/NOTES
		FASTENERS	
61	-	NO. 12 X 1 1/4" S.S. SCREW	4 PER HINGE TO STILE
62	-	NO.12 X 3/4" S.S. SCREW	3 PER HINGE TO JAMB
63	-	NO. 8 X 3" S.S. WOOD SCREW	7 WITHIN 3" OF ENDS & EQ. SPACED
64	-	NO. 8 X 2 1/2" S.S. WOOD SCREW	4" FROM CORNERS & MAX. 9" O.C.
65	-	15 GA. X 1 1/2" FINISH NAIL	3" FROM CORNERS & MAX. 8" O.C.
66	-	NO. 8 X 3" S.S. SCREW	4" FROM CORNERS & MAX. 9" O.C.
67	-	3/16" X 1 1/4" 18 GA. STAPLE	WITHIN 4" FROM CORNERS & 12" O.C.
68	-	NO. 8 X 3/4" SCREW	3 PER ASTRAGAL STRIKE PLATE
69	-	NO. 8 X 3/4" SCREW	2 PER JAMB STRIKE PLATE
71	-	NO. 8 X 1/2" SCREW	4 1/2" FROM CORNERS & 1 CENTERED
72	-	NO. 8 X 1 1/4" SCREW	2 1/2" FROM CORNERS & 2 BETWEEN EQUALLY SPACED
73	-	NO. 8 X 1 1/2" SCREW	4" FROM CORNERS & MAX. 14" O.C.
74	-	18 GA. X 5/8" BRAD NAIL	1/4" FROM CORNERS &. 1/2" O.C.
75	-	NO. 8 X 1 3/4" SCREW	2 1/2" FROM CORNERS & 2 BETWEEN EQUALLY SPACED

*** WOOD USED WITH TEST UNITS WAS SELECT WESTERN PINE. ALTERNATE WOOD SPECIES TO BE APPLICABLE WITH THESE WINDOWS IS MIN. SELECT MAHOGANY, PONDEROSA PINE, SOUTHERN PINE, OAK, CHERRY, MAPLE, DOUGLAS FIR, ALDER, LIPTUS, WALNUT, TEAK, HICKORY, POPLAR, BIRCH, MIRANTI, ELM, ASH & CYPRESS.**

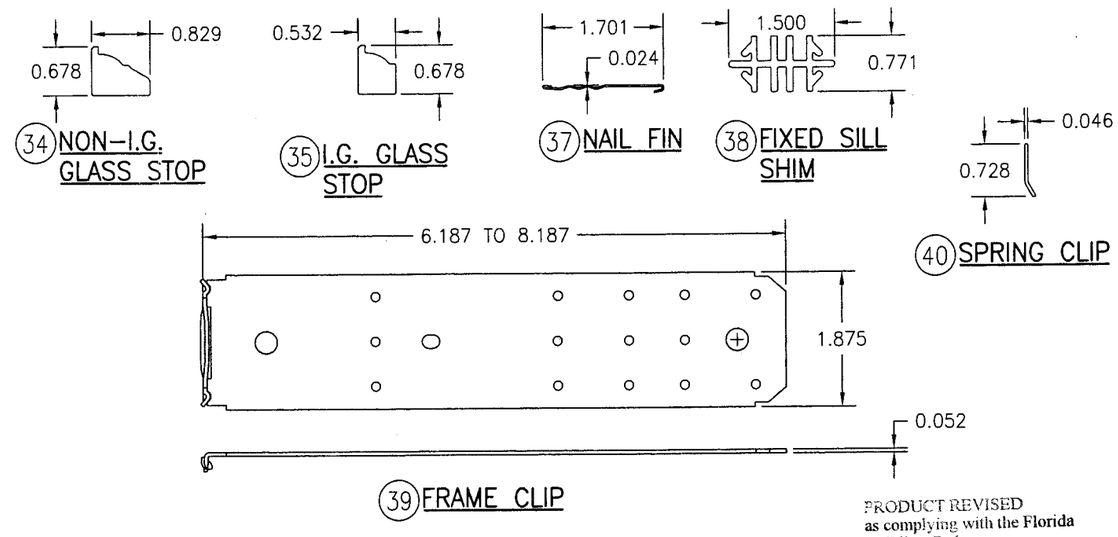

PRODUCT REVISED
as complying with the Florida Building Code
Acceptance No 07-0914.01
Expiration Date 05/16/2012
By
Miami Dade Product Control Division

as complying with the Building Code
Date 05/17/2007
NOA# 06-1228.04
Miami Dade Product Control Division
By

DRAWN BY: W.R.M.	CHECKED BY: W.W.S.
PLOT: 1=2	DATE: 11/08/06

NO.	REVISION DESCRIPTION	BY	DATE

DRAWING TITLE
ARCHITECT SERIES ALUMINUM CLAD IMPACT OUTSWING FRENCH DOORS

MANUFACTURER
PELLA CORPORATION
102 MAIN STREET
PELLA, IA 50219
641-621-1000

CONSULTANTS
W. W. SCHAEFER ENGINEERING & CONSULTING, P.A.
8895 N. MILITARY TRAIL; SUITE C-204
PALM BEACH GARDENS, FL 33410
PHONE: 561-775-4902 FAX: 561-775-4903

CERTIFICATION
MAR 2 3 2007
WARREN W. SCHAEFER, P.E.
P.E. NO. 44135

DRAWING NO. 1499
REV.
SHEET NO. 11 OF 11