MIAMI-DADE

BUILDING CODE COMPLIANCE OFFICE (BCCO)
PRODUCT CONTROL DIVISION

MIAMI-DADE COUNTY, FLORIDA
METRO-DADE FLAGLER BUILDING
140 WEST FLAGLER STREET, SUITE 1603
MIAMI, FLORIDA 33130-1563
(305) 375-2901 FAX (305) 375-2908

NOTICE OF ACCEPTANCE (NOA)

Ludowici Roof Tile, Inc.
4757 Tile Plant Road
New Lexington, OH 43764

SCOPE:

This NOA is being issued under the applicable rules and regulations governing the use of construction materials. The documentation submitted has been reviewed by Miami-Dade County Product Control Division and accepted by the Board of Rules and Appeals (BORA) to be used in Miami Dade County and other areas where allowed by the Authority Having Jurisdiction (AHJ).

This NOA shall not be valid after the expiration date stated below. The Miami-Dade County Product Control Division (In Miami Dade County) and/or the AHJ (in areas other than Miami Dade County) reserve the right to have this product or material tested for quality assurance purposes. If this product or material fails to perform in the accepted manner, the manufacturer will incur the expense of such testing and the AHJ may immediately revoke, modify, or suspend the use of such product or material within their jurisdiction. BORA reserves the right to revoke this acceptance, if it is determined by Miami-Dade County Product Control Division that this product or material fails to meet the requirements of the applicable building code.

This product is approved as described herein, and has been designed to comply with the Florida Building code including the High Velocity Hurricane Zone of the Florida Building Code.

DESCRIPTION: 'Spanish' Clay Roof Tile

LABELING: Each unit shall bear a permanent label with the manufacturer's name or logo, city, state and following statement: "Miami-Dade County Product Control Approved", unless otherwise noted herein.

RENEWAL of this NOA shall be considered after a renewal application has been filed and there has been no change in the applicable building code negatively affecting the performance of this product.

TERMINATION of this NOA will occur after the expiration date or if there has been a revision or change in the materials, use, and/or manufacture of the product or process. Misuse of this NOA as an endorsement of any product, for sales, advertising or any other purposes shall automatically terminate this NOA. Failure to comply with any section of this NOA shall be cause for termination and removal of NOA.

ADVERTISEMENT: The NOA number preceded by the words Miami-Dade County, Florida, and followed by the expiration date may be displayed in advertising literature. If any portion of the NOA is displayed, then it shall be done in its entirety.

INSPECTION: A copy of this entire NOA shall be provided to the user by the manufacturer or its distributors and shall be available for inspection at the job site at the request of the Building Official.

This renews NOA 02-1211.05 and consists of pages 1 through 6.
The submitted documentation was reviewed by Alex Tigera.

MIAMI-DADE COUNTY APPROVED

ROOFING ASSEMBLY APPROVAL

Category: Roofing

Sub-Category: High Profile Roofing Tiles
Material: Clay

1. SCOPE

This renews a roofing system using Ludowici **'Spanish' Clay Roof Tile**, as manufactured Ludowici Roof Tile, Inc. and described in Section 2 of this Notice of Acceptance. For locations where the pressure requirements, as determined by applicable Building Code does not exceed the design pressure values obtained by calculations in compliance with RAS 127 using the values listed in section 4 herein. The attachment calculations shall be done as a moment based system.

2. PRODUCT DESCRIPTION

Manufactured by Applicant	Dimensions	Test Specifications	Product Description
Ludowici Spanish Roof Tile		ASTM C 1167	High profile, interlocking, one piece, 'S' shaped, vitrified clay roof tile equipped with two nail holes. For direct deck or battened, nail-on, mortar set or adhesive set applications.
Trim Pieces	l = varies w = varies varying thickness	ASTM C 1167	Accessory trim, clay roof pieces for use at hips, rakes, ridges and valley terminations. Manufactured for each tile profile.

2.1 SUBMITTED EVIDENCE:

Test Agency	Test Identifier	Test Name/Report	Date
IBA Consultants, Inc.	2376-282	ASTM C 1167	Sept 2007
The Center for Applied Engineering, Inc.	94-083 94-084	Static Uplift Testing PA 101 (Adhesive Set) (Mortar Set)	April 1994 May 1994
The Center for Applied Engineering, Inc.	Project No. 307025 Test #MDC-77	Wind Driven Rain PA 100	Oct. 1994
The Center for Applied Engineering, Inc.	25-7200-1	Static Uplift Testing PA 102 (Screws, Battens)	Feb. 1995
Redland Technologies	7161-03 Appendix II	Wind Tunnel Testing PA 108 (Nail-On)	Dec. 1991
Redland Technologies	7161-03 Appendix III	Static Uplift Testing PA 102 & 102(A)	Dec. 1991
Redland Technologies	P0402	Withdrawal Resistance Testing of screw vs. smooth shank nails	Sept. 1993
Redland Technologies	Letter Dated Aug. 1, 1994	Wind Tunnel Testing PA 108 (Nail-On)	Aug. 1994

Test Agency	Test Identifier	Test Name/Report	Date
Redland Technologies	P0647-01	Wind Tunnel Testing PA 108 (Mortar Set)	Aug. 1994
Celotex Corporation	520111-3	Static Uplift Testing	Dec. 1998
Testing Services	520191-2-1	PA 101	March 1999
Walker Engineering, Inc.	Calculations	Aerodynamic Multiplier	March 1999
Walker Engineering, Inc.	Calculations	25-7094 25-7496	February 1996 April 1996
Walker Engineering, Inc.	Calculations	25-7584 25-7804b-8 25-7804-4 & 5 25-7848-6	December 1996
Walker Engineering, Inc.	Calculations	25-7183	March 1995
Walker Engineering, Inc.	Calculations	Two Patty Adhesive Set System	April 1999

3. LIMITATIONS

3.1 Fire classification is not part of this acceptance.

3.2 For mortar or adhesive set tile applications, a static field uplift test shall be performed in accordance with RAS 106.

3.3 Applicant shall retain the services of a Miami-Dade County Certified Laboratory to perform quarterly test in accordance with TAS 112, appendix 'A'. Such testing shall be submitted to the Building Code Compliance Office for review.

3.4 Minimum underlayment shall be in compliance with the applicable Roofing Applications Standards listed section 4.1 herein.

3.5 30/90 hot mopped underlayment applications may be installed perpendicular to the roof slope unless stated otherwise by the underlayment material manufacturers published literature.

3.6 This acceptance is for wood deck applications. Minimum deck requirements shall be in compliance with applicable building code.

4. INSTALLATION

4.1 Ludowici 'Spanish' Clay Roof Tile and its components shall be installed in strict compliance with Roofing Application Standard RAS 118, RAS 119 and RAS 120.

4.2 Data For Attachment Calculations

Table 1: Average Weight (W) and Dimensions (l x w)

Tile Profile	Weight-W (lbf)	Length-l (ft)	Width-w (ft)
Ludowici Spanish Tile	5.00	1.10	0.81
Ludowici Spanish Tile	7.02	1.50	0.81

Table 2: Aerodynamic Multipliers - λ (ft^3)

Tile Profile	λ (ft^3) Batten Application	λ (ft^3) Direct Deck Application
Ludowici Spanish Tile	0.228	0.247

Table 3: Restoring Moments due to Gravity - M_g (ft-lbf)										
Tile Profile	3":12"		4":12"		5":12"		6":12"		7":12" or greater	
Ludowici Spanish Tile	Battens	Direct Deck	Battens	Direct Deck	Battens	Direct Deck	Battens	Direct Deck	Battens	Direct Deck
	2.51	2.73	2.48	2.70	2.42	2.63	2.36	2.57	2.90	2.50

Table 4: Attachment Resistance Expressed as a Moment - M_f (ft-lbf) for Nail-On Systems				
Tile Profile	Fastener Type	Direct Deck (min 15/32" plywood)	Direct Deck (min. 19/32" plywood)	Battens
Ludowici Spanish Tile	2-10d Ring Shank Nails	28.6	41.2	19.4
	1-10d Smooth or Screw Shank Nail	5.1	6.8	2.8
	2-10d Smooth or Screw Shank Nails	6.9	9.2	7.3
	1 .#8 Screw	20.7	20.7	18.1
	2 .#8 Screws	43.2	43.2	29.8
	1-10d Smooth or Screw Shank Nail (Field Clip)	23.1	23.1	19.0
	1-10d Smooth or Screw Shank Nail (Eave Clip)	29.3	29.3	24.0
	2-10d Smooth or Screw Shank Nails (Field Clip)	27.6	27.6	38.6
	2-10d Smooth or Screw Shank Nails (Eave Clip)	38.1	38.1	41.8
	2-10d Ring Shank Nails[1]	33.1	48.1	45.2

1 Installation with a 4" tile headlap and fasterners are located a min. of 2½" from head of tile.

Table 6: Attachment Resistance Expressed as a Moment M_f (ft-lbf) for Two Patty Adhesive Set Systems		
Tile Profile	Tile Application	Minimum Attachment Resistance
Ludowici Spanish Tile	Adhesive	29.3[3]

2 See manufactures component approval for installation requirements.
3 Flexible Products Company TileBond Average weight per patty 10.7 grams.
Polyfoam Product, Inc. Average weight per patty 8 grams.

Table 7: Attachment Resistance Expressed as a Moment - M_f (ft-lbf) for Single Patty Adhesive Set Systems		
Tile Profile	Tile Application	Minimum Attachment Resistance
Ludowici Spanish Tile	Polyfoam PolyPro™	66.5[4]
	Polyfoam PolyPro™	38.7[5]

4 Large paddy placement of 63grams of PolyPro™.
5 Medium paddy placement of 24grams of PolyPro™.

Table 8: Attachment Resistance Expressed as a Moment - M_f (ft-lbf) for Mortar Set Systems		
Tile Profile	**Tile Application**	**Attachment Resistance**
Ludowici Spanish Tile	Mortar Set	24.5

5. LABELING

All tiles shall bear the imprint or identifiable marking of the manufacturer's name or logo as seen below, or following statement: "Miami-Dade County Product Control Approved".

LUDOWICI ASTM C1167 GRADE I

IDENTIFICATION MARK FOR SPANISH CLAY ROOF TILES
(LOCATED UNDERNEATH TILE)

6. BUILDING PERMIT REQUIREMENTS

6.1 Application for building permit shall be accompanied by copies of the following:

6.1.1 This Notice of Acceptance.

6.1.2 Any other documents required by the Building Official or applicable building code in order to properly evaluate the installation of this system.

PROFILE DRAWINGS

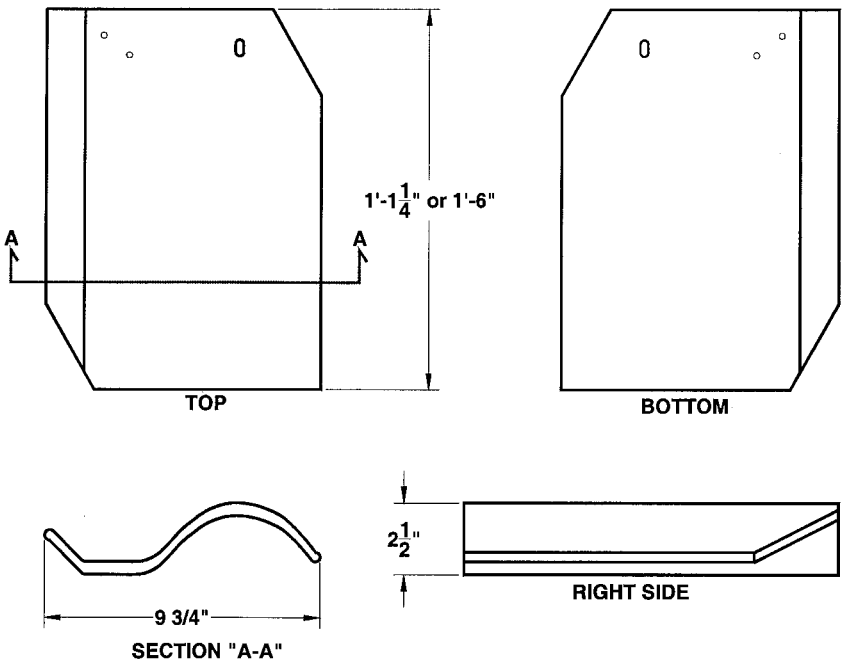

LUDOWICI SPANISH TILE

END OF THIS ACCEPTANCE