MIAMI-DADE COUNTY
BUILDING CODE COMPLIANCE OFFICE (BCCO)
PRODUCT CONTROL DIVISION

MIAMI-DADE COUNTY, FLORIDA
METRO-DADE FLAGLER BUILDING
140 WEST FLAGLER STREET, SUITE 1603
MIAMI, FLORIDA 33130-1563
(305) 375-2901 FAX (305) 375-2908
www.miamidade.gov/buldingcode

NOTICE OF ACCEPTANCE (NOA)

Sun-Dome by Daylighting Technologies, Inc.
3520 Investment Lane, Suite 4
West Palm Beach, FL 33404

SCOPE:

This NOA is being issued under the applicable rules and regulations governing the use of construction materials. The documentation submitted has been reviewed by Miami-Dade County Product Control Division and accepted by the Board of Rules and Appeals (BORA) to be used in Miami Dade County and other areas where allowed by the Authority Having Jurisdiction (AHJ).

This NOA shall not be valid after the expiration date stated below. The Miami-Dade County Product Control Division (In Miami Dade County) and/or the AHJ (in areas other than Miami Dade County) reserve the right to have this product or material tested for quality assurance purposes. If this product or material fails to perform in the accepted manner, the manufacturer will incur the expense of such testing and the AHJ may immediately revoke, modify, or suspend the use of such product or material within their jurisdiction. BORA reserves the right to revoke this acceptance, if it is determined by Miami-Dade County Product Control Division that this product or material fails to meet the requirements of the applicable building code.
This product is approved as described herein, and has been designed to comply with the Florida Building Code, including the High Velocity Hurricane Zone.

DESCRIPTION: Sun-Dome Skylight

APPROVAL DOCUMENT: Drawing No. 1, titled "Sun-Dome/Tubular Skylight", prepared by Daylighting Technologies Inc, dated 11/07/01, with last revision dated 10/22/07, sheets 1 of 1, signed and sealed by Terrence E. Lunn, P.E., bearing the Miami-Dade County Product Control revision stamp with the Notice of Acceptance number and expiration date by the Miami-Dade County Product Control Division.

MISSILE IMPACT RATING: Large and Small Missile Impact Resistant

LABELING: Each unit shall bear a permanent label with the manufacturer's name or logo, city, state and the following statement: "Miami-Dade County Product Control Approved or MDCPCA", unless otherwise noted herein.

RENEWAL of this NOA shall be considered after a renewal application has been filed and there has been no change in the applicable building code negatively affecting the performance of this product.

TERMINATION of this NOA will occur after the expiration date or if there has been a revision or change in the materials, use, and/or manufacture of the product or process. Misuse of this NOA as an endorsement of any product, for sales, advertising or any other purposes shall automatically terminate this NOA. Failure to comply with any section of this NOA shall be cause for termination and removal of NOA.

ADVERTISEMENT: The NOA number preceded by the words Miami-Dade County, Florida, and followed by the expiration date may be displayed in advertising literature. If any portion of the NOA is displayed, then it shall be done in its entirety.

INSPECTION: A copy of this entire NOA shall be provided to the user by the manufacturer or its distributors and shall be available for inspection at the job site at the request of the Building Official.

This NOA **renews and revises NOA # 06-1017.01,** and consists of this page 1, evidence page E-1, as well as approval document mentioned above.

The submitted documentation was reviewed by **Carlos M. Utrera, P.E.**

PRODUCT CONTROL ACCEPTED

11/16/07

NOTICE OF ACCEPTANCE: EVIDENCE SUBMITTED

A. DRAWING

1. Drawings prepared by Daylighting Technologies, Inc., titled "Sun-Dome/Tubular Skylight", Drawing No.1, Sheet 1 of 1, dated 11/07/01, with last revision dated 10/22/07, signed and sealed by Terrence E. Lunn, P.E.

B. TEST

1. Test reports on 1) Air Infiltration Test, per FBC, TAS 202-94
   2) Uniform Static Air Pressure Test, Loading per FBC TAS 202-94
   3) Water Resistance Test, per FBC, TAS 202-94
   4) Large Missile Impact Test per FBC, TAS 201-94
   5) Cyclic Wind Pressure Loading per FBC, TAS 203-94

   along with marked-up drawings and installation diagram of tubular dome, prepared by Hurricane Test Laboratory, LLC, Test Report No. 0454-0903-06, dated 01/16/07, signed and sealed by Viny J. Abraham, P.E.

C. CALCULATIONS

1. Anchor calculations letter issued T.E. Lunn, P.E., LLC, dated 10/30/07, signed and sealed by Terrence E. Lunn, P.E.

D. QUALITY ASSURANCE

1. Miami Dade Building Code Compliance Office (BCCO).

E. MATERIAL CERTIFICATION

1. None.

F. STATEMENTS

1. Test Compliance letter issued by Hurricane Test Laboratory, LLC, issued on 01/16/07, signed and sealed by Vinu J. Abraham, P.E.
2. Code compliance letter issued by T.E. Lunn, P.E., LLC, dated 10/30/07, signed and sealed by Terrence E. Lunn, P.E.
3. No financial interest letter issued by T.E. Lunn, P.E., LLC, dated 10/22/07, signed and sealed by Terrence E. Lunn, P.E.

11/16/07

Carlos M. Utrera, P.E.
Product Control Examiner
NOA No: 07-0917.03
Expiration Date: December 15, 2011
Approval Date: December 13, 2007

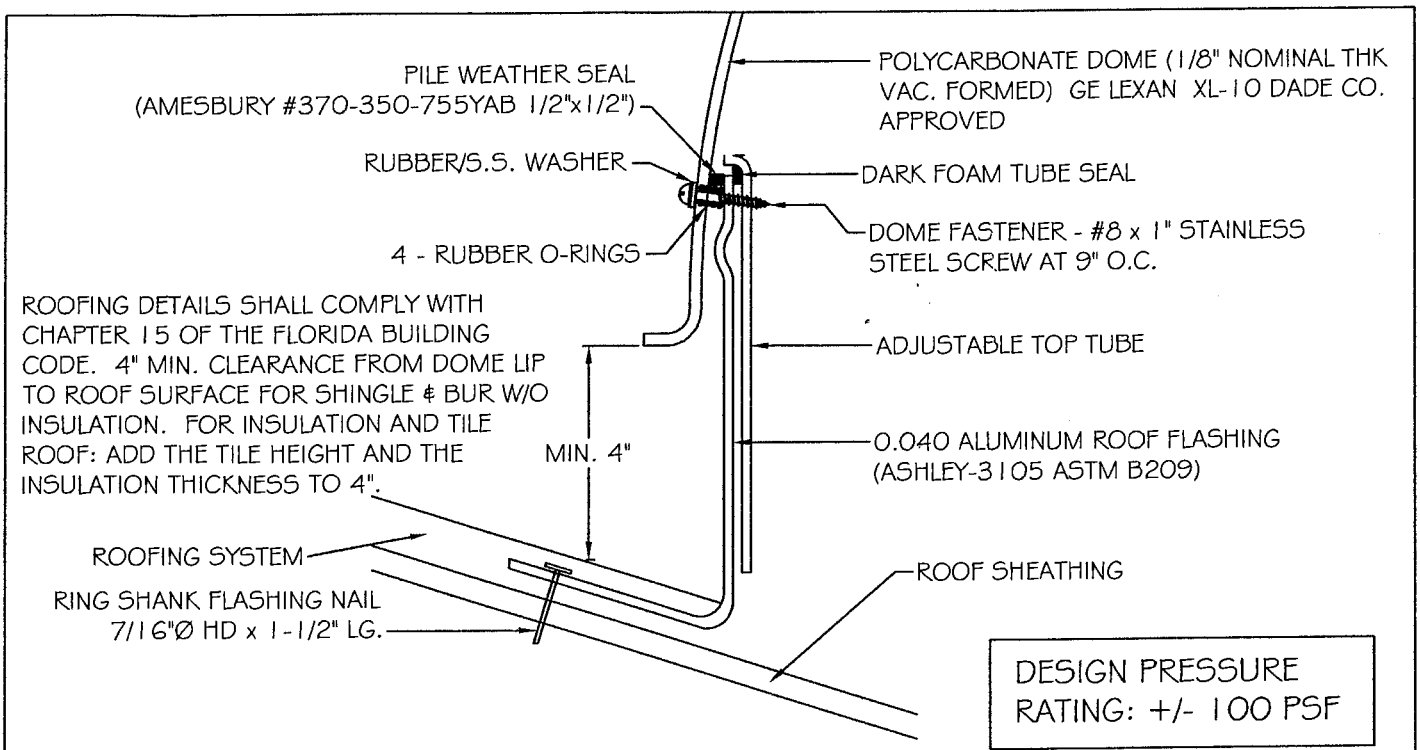

SUN-DOME CONNECTION DETAILS

DESIGN PRESSURE RATING: +/- 100 PSF

APPROVED FOR USE IN AND OUTSIDE HVHZ.

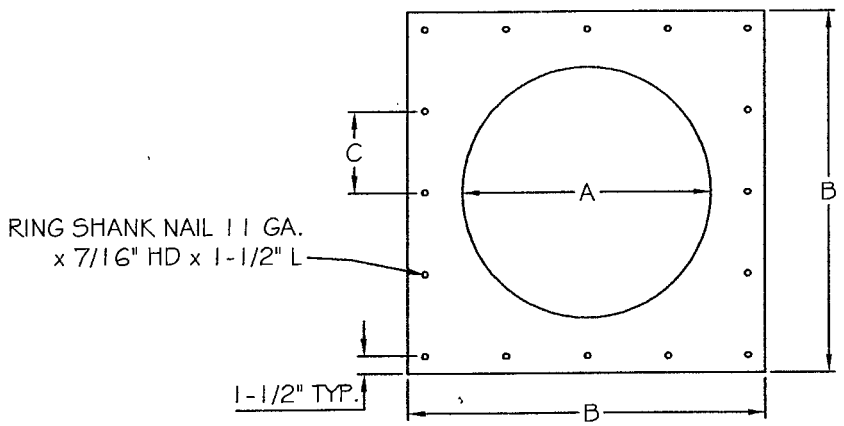

ROOF FLASHING DIMENSIONS

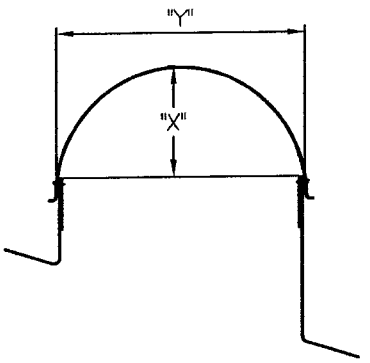

SUN-DOME DIMENSIONS

MODEL	Y DIA.	X RISE	ROOF FLANGE DIMENSIONS A	B	C	DOME FASTENERS
21"	22"	9.5"	21.5"	29.0"	5 SPACES +/-6"	8
13"	14"	6.75"	13.5"	23.5"	4 SPACES +/-5"	5
10"	11"	6.0"	10.5"	20.0"	3 SPACES +/-5"	4

FOR BCCO USE
07-091703
12/15/2011

T.E. LUNN, PE
ENGINEERING
23 THURSTON DRIVE
PALM BEACH GARDENS,
FLORIDA 33418
(561) 625-6455
FL Reg. # 26119

SCALE: 1/2"=1'-0"
DATE: 10/22/07
CAD DWG FILE:
DRAWN BY: TEL
CHECKED BY: TEL

11.5.07

REVISION: 10.22.07 ADDED REG NO. AND NAILING

PRODUCT
SUN-DOME / TUBULAR SKYLIGHT
ALUMINUM CURB / PC DOME

DAYLIGHTING TECHNOLOGIES
RIVIERA BEACH, FL 33404

DRAWING
1 OF 1