MIAMI-DADE COUNTY
BUILDING CODE COMPLIANCE OFFICE (BCCO)
PRODUCT CONTROL DIVISION

MIAMI-DADE COUNTY, FLORIDA
METRO-DADE FLAGLER BUILDING
140 WEST FLAGLER STREET, SUITE 1603
MIAMI, FLORIDA 33130-1563
(305) 375-2901 FAX (305) 375-2908

www.buildingcodeonline.com

NOTICE OF ACCEPTANCE (NOA)

Tishler Und Sohn (USA) Ltd
Six Suburban avenue
Stamford, CT 06901

SCOPE:

This NOA is being issued under the applicable rules and regulations governing the use of construction materials. The documentation submitted has been reviewed by Miami-Dade County Product Control Division and accepted by the Board of Rules and Appeals (BORA) to be used in Miami Dade County and other areas where allowed by the Authority Having Jurisdiction (AHJ).

This NOA shall not be valid after the expiration date stated below. The Miami-Dade County Product Control Division (In Miami Dade County) and/or the AHJ (in areas other than Miami Dade County) reserve the right to have this product or material tested for quality assurance purposes. If this product or material fails to perform in the accepted manner, the manufacturer will incur the expense of such testing and the AHJ may immediately revoke, modify, or suspend the use of such product or material within their jurisdiction. BORA reserves the right to revoke this acceptance, if it is determined by Miami-Dade County Product Control Division that this product or material fails to meet the requirements of the applicable building code.

This product is approved as described herein, and has been designed to comply with the Florida Building Code, including the High Velocity Hurricane Zone.

DESCRIPTION: The **Tishler** Series Outswing Mahogany Wood French Doors-**Impact**

APPROVAL DOCUMENT: Drawing No. **TS-8**, titled "Outswing Mahogany French Door" Sheets 1 through 34 of 34, dated 05-28-2001 and last revised on 06-06-2001, prepared by manufacturer, signed and sealed by Vipin N. Tolat, P. E., , bearing the Miami-Dade County Product Control Renewal stamp with the Notice of Acceptance number and expiration date by the Miami-Dade County Product Control Division.

MISSILE IMPACT RATING: Large and Small Missile Impact Resistant

LABELING: Each unit shall bear a permanent label with the manufacturer's name or logo, city, state and following statement: "Miami-Dade County Product Control Approved", unless otherwise noted herein.

RENEWAL of this NOA shall be considered after a renewal application has been filed and there has been no change in the applicable building code negatively affecting the performance of this product.

TERMINATION of this NOA will occur after the expiration date or if there has been a revision or change in the materials, use, and/or manufacture of the product or process. Misuse of this NOA as an endorsement of any product, for sales, advertising or any other purposes shall automatically terminate this NOA. Failure to comply with any section of this NOA shall be cause for termination and removal of NOA.

ADVERTISEMENT: The NOA number preceded by the words Miami-Dade County, Florida, and followed by the expiration date may be displayed in advertising literature. If any portion of the NOA is displayed, then it shall be done in its entirety.

INSPECTION: A copy of this entire NOA shall be provided to the user by the manufacturer or its distributors and shall be available for inspection at the job site at the request of the Building Official.

This NOA **renews NOA # 06-0505.03** and, consists of this page 1 and evidence pages E-1 & E-2 as well as approval document mentioned above.
The submitted documentation was reviewed by **Ishaq I. Chanda, P. E.**

PRODUCT CONTROL ACCEPTED

10/4/17

Tishler Und Sohn (USA) Ltd

NOTICE OF ACCEPTANCE: EVIDENCE SUBMITTED

A. DRAWINGS (transferred from file # **06-0505.03**)

1. Manufacturer's drawings and sections.
2. Drawing No. **TS-8**, titled "Outswing Mahogany French Door" Sheets 1 through 34 of 34, dated 05-28-2001 and last revised on 06-06-2001, prepared by manufacturer, signed and sealed by Vipin N. Tolat, P. E.

B. TESTS (Test reports originally conducted per SFBC, PA 201, 202 & 203-94 now termed as FBC, TAS 201, 202 & 203-94)

1. Test reports on:
   1) Air Infiltration Test, per PA 202-94
   2) Uniform Load Static Air Pressure Test, per PA 202-94
   3) Water Resistance Test, per PA 202-94
   4) Forced Entry Resistance Test, per SFBC3603.2 (b) 5.

Along with installation diagram of an Outswing French wood door marked-up by Construction Research Laboratory, Inc., Test Report No. **6145**, dated June 23, 1995 and signed and sealed by Vipin N. Tolat, P. E.

2. Additional test : Test reports on
   1)Large Missile Impact Test, SFBC PA 201-94
   2) Cyclic Loading Test, per SFBC PA 203-94

Along with installation diagram of Round Top outswing French wood door marked-up by Construction Research Laboratory, Inc., Test Report No. **6474**, dated 11/10/97 thru 10/20/98, signed and sealed by Nariman S. Balsara, P. E.

C. CALCULATIONS (transferred from file # **06-0505.03**)

1. Additional anchor verification calculations and structural performance dated 06-04-2001 prepared, signed and sealed by Vipin N. Tolat, P.E.(# **01-0209.14**)
2. Anchor verification calculation dated July 10, 1995, prepared signed and sealed by Santiago A. Tablada, P. E. (From file #95-1215.04).

D. QUALITY ASSURANCE

1. Miami Dade Building Code Compliance Office (BCCO).

E. MATERIAL CERTIFICATIONS

1. Notice of Acceptance No. 06-0216.06, for "Saflex PVB Interlayer" laminated glass by Solutia, expiring 05-21-2011
2. Notice of Acceptance No. 04-0115.01 for "HRG-2" laminated glass by Viracon Inc., expiring 02-12-2009.
3. Test report No. 00-010FST dated 06 March, 2000, issued by Construction testing Corp. for "BTI-Masonry" anchor, signed and sealed by Yamil Kuri, P. E.

Ishaq I. Chanda

Ishaq I. Chanda, P. E.
Product Control Examiner
NOA No 07-0918.05
Expiration Date: October 12, 2008
Approval Date: October 25, 2007

NOTICE OF ACCEPTANCE: EVIDENCE SUBMITTED

F. STATEMENTS

1. Statement letter dated October 04, 2007, issued by Architectural Testing for schedule testing in Jan. 2008, signed by Michael Stemmel, P.E.
2. Statement letter dated 05-01-2006 verifying compliance to FBC2004 and Engineer is in business, signed & sealed by Vipin N. Tolat, P.E.
3. Statement letter of conformance and "No financial interest" and Engineer still in business, dated 09-12-2007, signed by Vipin N. Tolat, P.E.
4. Statement compliance letter, as part of the test report CRL 6474 & CRL6167 issued by Construction Research Laboratory, Inc, signed by Richard Sembello.
5. Letter issued by Tischler Und Sohn, dated September 26, 2001, delegating Mr. Vipin Tolat, P. E. the technical consultant on behalf of the company, signed by Steve Albert.

G. OTHER

1. This **renews** NOA # **06-0505.03,** expiring October 12, 2007.
2. This renewal is one year approval, subjected to submittal of verification test.
3. Glazing complies w/ ASTME-1300-98 & -02.

Ishaq I. Chanda

Ishaq I. Chanda, P. E.
Product Control Examiner
NOA No 07-0918.05
Expiration Date: October 12, 2008
Approval Date: October 25, 2007

TISCHLER UND SOHN
Tischler und Sohn (U.S.A.) Ltd.
Six Suburban Avenue
Stamford, CT06901 USA
Tel.: 203/674-0600
Fax: 203/674-0601
E-mail: dtwedt-tischler @worldnet.att.net

DADE COUNTY - FLORIDA
TESTING OF WOOD WINDOWS & DOORS

ELEVATION OF
11'-8" HIGH OUTSWING MAHOGANY FRENCH DOORS

VIPIN N. TOLAT, P.E.
FL. REG.# 12847

6/6/01

Date: Nov. 29.99 | Revised 5/28/2001 | Sheet 1 of 34 | Scale: 1/2"=1'-0" (1:24) | Drawn by: K.M. | Drawing No. TS-8

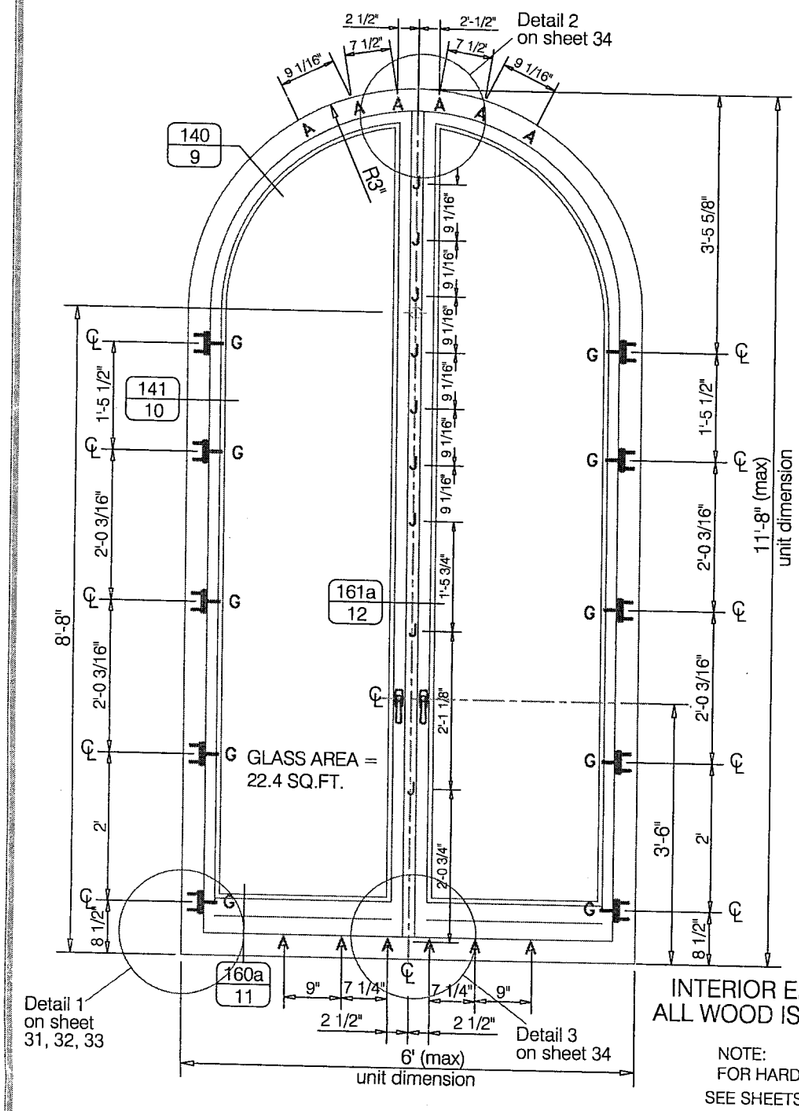

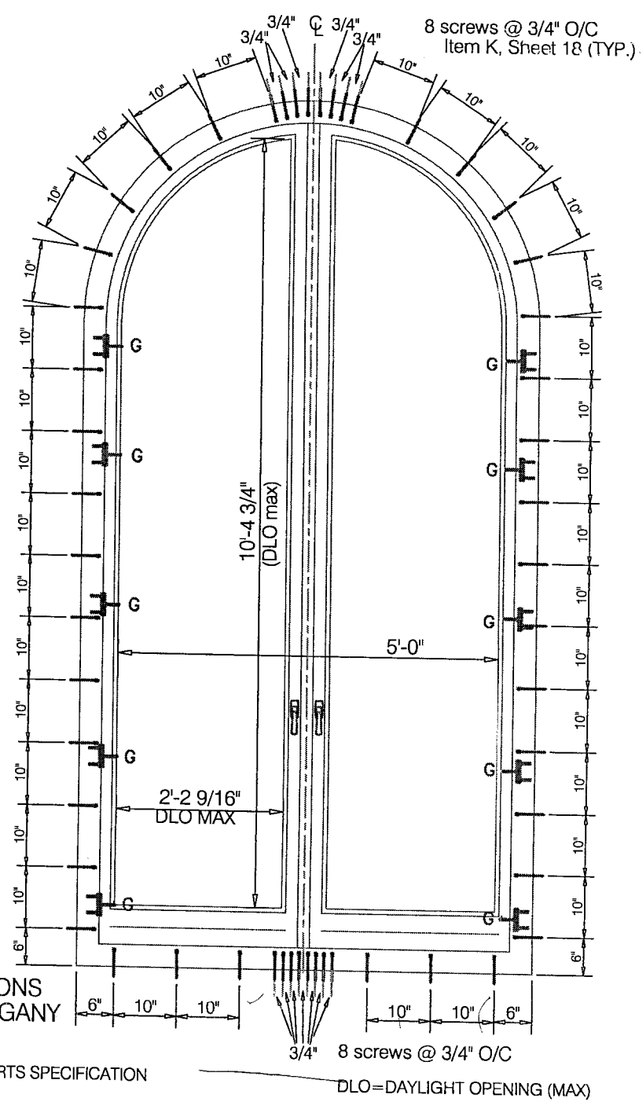

INTERIOR ELEVATIONS
ALL WOOD IS MAHOGANY

NOTE:
FOR HARDWARE PARTS SPECIFICATION
SEE SHEETS 17,18,19

DLO=DAYLIGHT OPENING (MAX)

Design Pressure Rating (Positive)	+57.9 PSF
Design Pressure Rating (Negaitive)	-67.8 PSF

OPERABLE OR FIXED LIGHTS. ALL MEMBERS ARE ANCHORED TO THE STRUCTURE OF 6" FROM EACH CORNER & 10" ON CENTERS.
USE 6mm DIAMETER x 120mm SCREWS FOR OPRABLE LIGHTS AND STEEL CLIPS FOR FIXED LIGHTS.
SEE SHEET 18 FOR DETAILS.

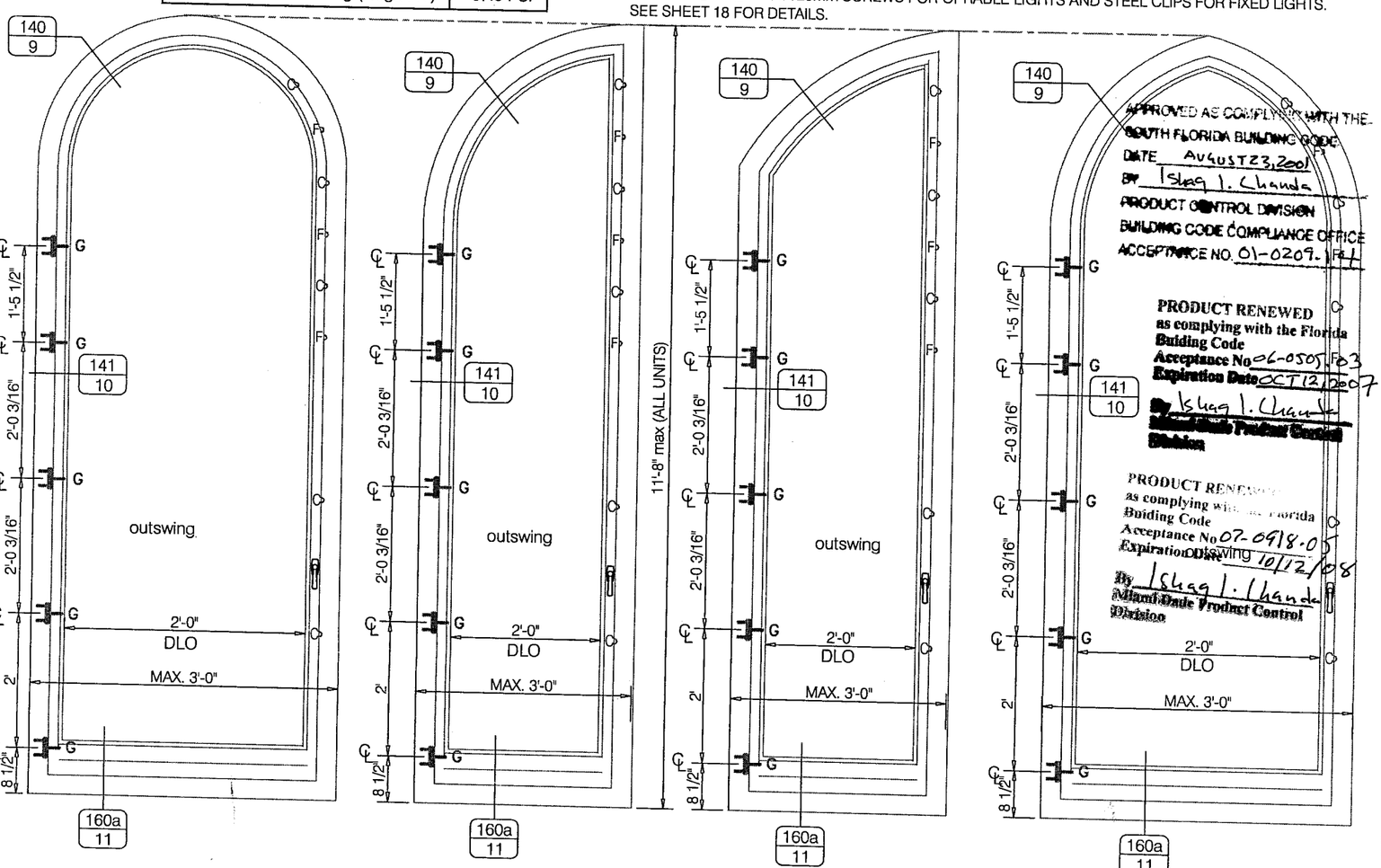

DOORS WITH ROUND TOP, OPERABLE.
MAX. GLASS AREA = 22.4 SQ.FT FOR EACH SHAPE

TISCHLER UND SOHN
Tischler und Sohn (U.S.A.) Ltd.
Six Suburban Avenue
Stamford, CT06901 USA
Tel.: 203/674-0600
Fax: 203/674-0601
E-mail: dtwedt-tischler @worldnet.att.net

DADE COUNTY - FLORIDA
TESTING OF WOOD WINDOWS & DOORS

ELEVATION OF 3'-0" X 11'-8" MAHOGANY FIXED LITES

VIPIN N. TOLAT, P.E.
FL. REG.# 12847

6/6/01

Date: Nov. 29.99 | Revised 5/28/2001 | Sheet 2 of 34 | Scale: 1/2"=1'-0" (1:24) | Drawn by: K.M. | Drawing No. TS-8

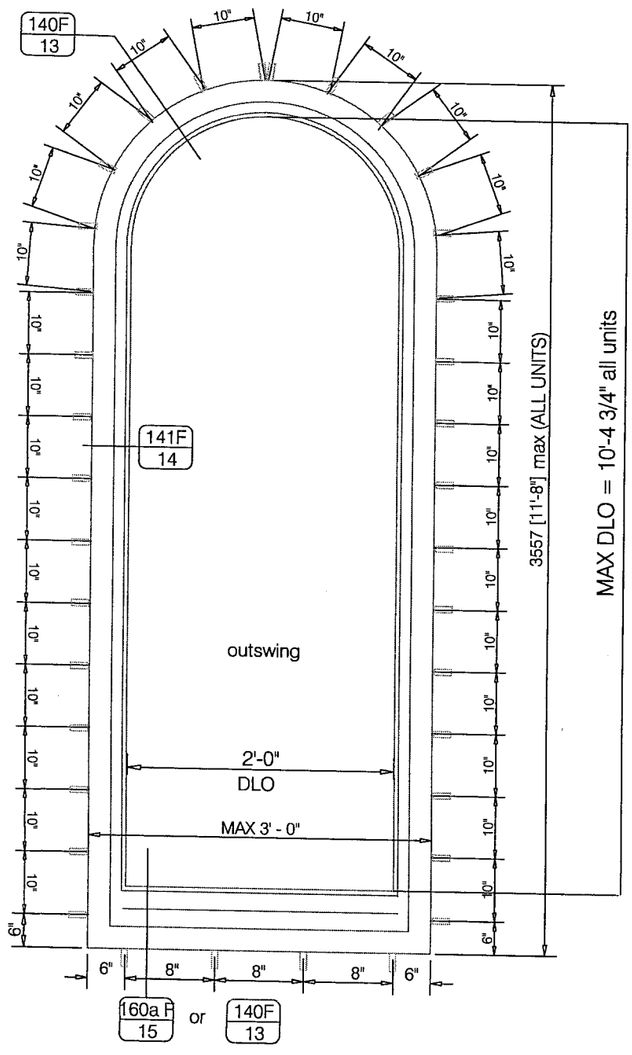

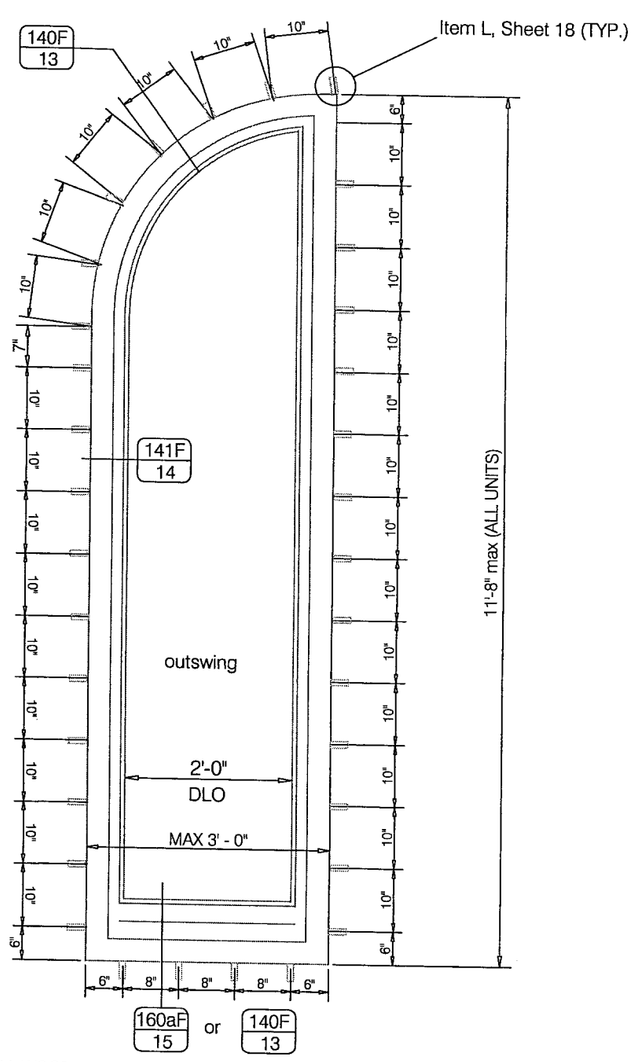

WINDOWS AND DOORS WITH ROUND TOP AND FIXED.
MAX. GLASS AREA = 22.4 SQ.FT FOR EACH SHAPE

Design Pressure Rating (Positive)	+57.9 PSF
Design Pressure Rating (Negaitive)	-67.8 PSF

INTERIOR ELEVATIONS ALL WOOD IS MAHOGANY.

ALL MEMBERS ARE ANCHORED TO THE STRUCTURE OF 6" FROM EACH CORNER & 10" ON CENTERS.
STEEL CLIPS USED FOR ATTACHMENT OF FIXED UNITS.
SEE SHEET 18 FOR ITEM L.

DLO=DAYLIGHT OPENING (MAX)

FOR HARDWARE SPECIFICATION SEE SHEET 18

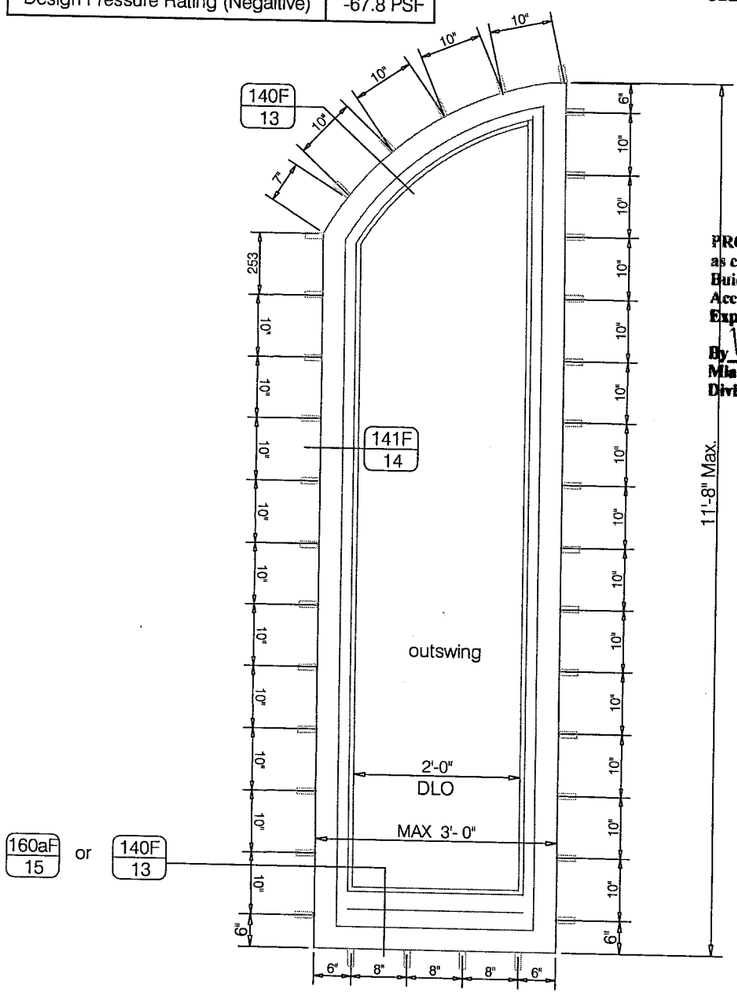

PRODUCT RENEWED
as complying with the Florida
Buiding Code
Acceptance No. 06-0505.03
Expiration Date 05/12/2007
By Ishaq I. Chanda
Miami Dade Product Control
Division

PRODUCT RENEWED
as complying with the Florida
Buiding Code
Acceptance No. 07-0918.05
Expiration Date 10/12/2010
By Ishaq I. Chanda
Miami Dade Product Control
Division

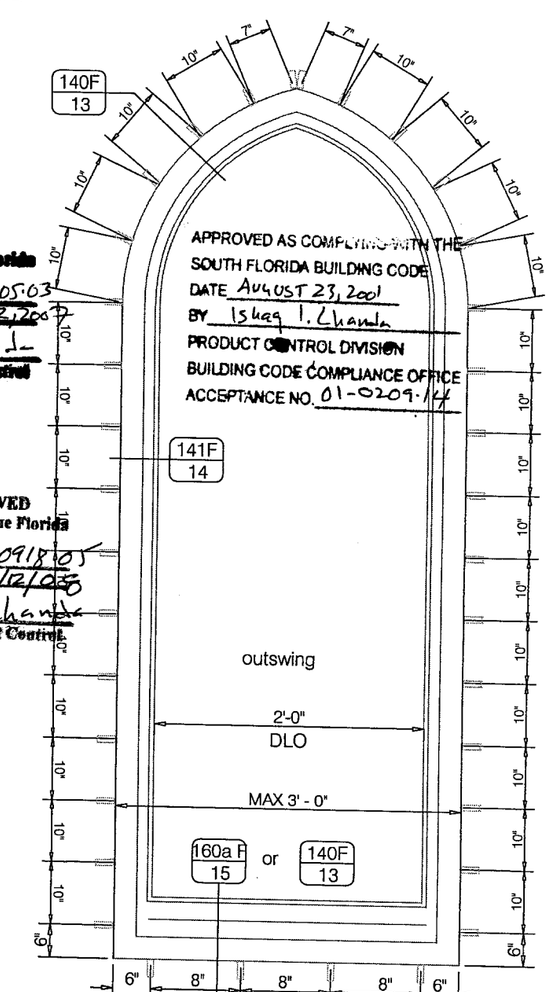

TISCHLER UND SOHN

Tischler und Sohn (U.S.A.) Ltd.
Six Suburban Avenue
Stamford, CT06901 USA
Tel.: 203/674-0600
Fax: 203/674-0601
E-mail: dtwedt-tischler @worldnet.att.net

DADE COUNTY - FLORIDA
TESTING OF WOOD WINDOWS & DOORS

ELEVATION OF
5'-4" X 11'-8" OUTSWING MAHOGANY FRENCH DOOR

VIPIN N. TOLAT, P.E.
FL. REG.# 12847

6/6/01

Date: Nov. 29.99 | Revised 5/28/2001 | Sheet 3 of 34 | Scale: 1/2"=1'-0" (1:24) | Drawn by: K.M. | Drawing No. TS-8

Design Pressure Rating (Positive)	+57.9 PSF
Design Pressure Rating (Negaitive)	-67.8 PSF

NOTE:
PROVIDE 6mm DIAMETER x 120mm WOOD SCREWS TO STRUCTURAL WOOD FRAME 1 1/2" PENETRATION- 6" FROM EACH CORNER & SPACED AS INDICATED BELOW - TOTAL 42 - ITEM K, SHEET 18.

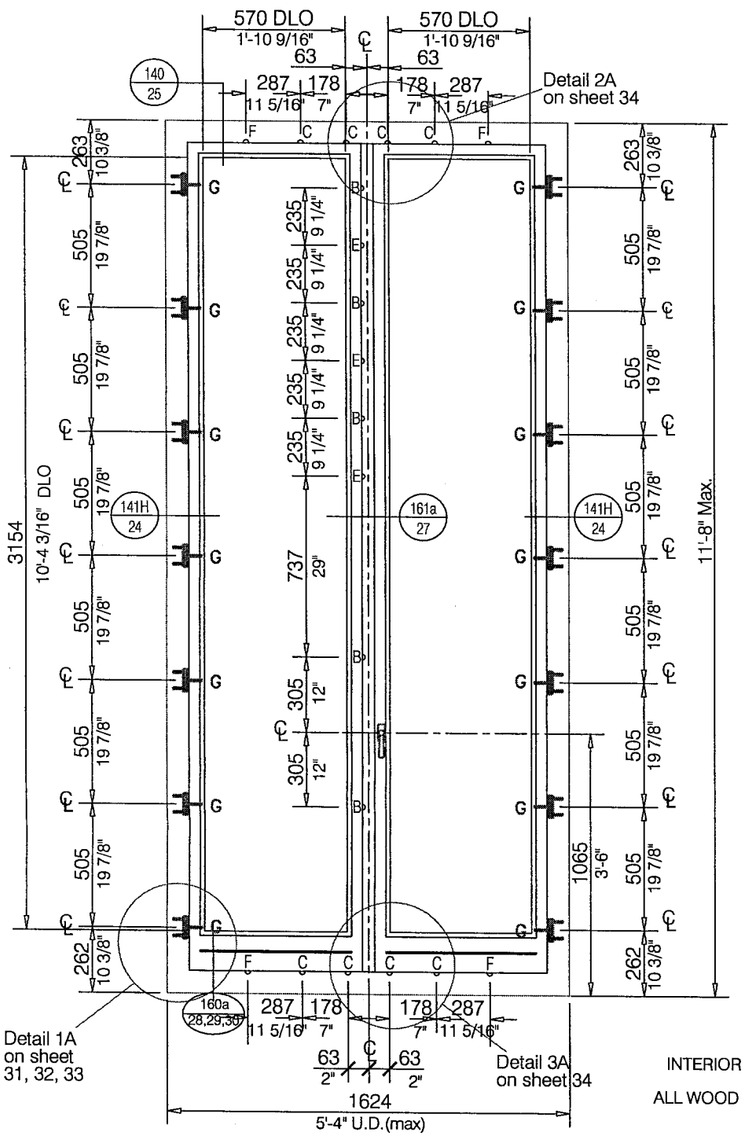

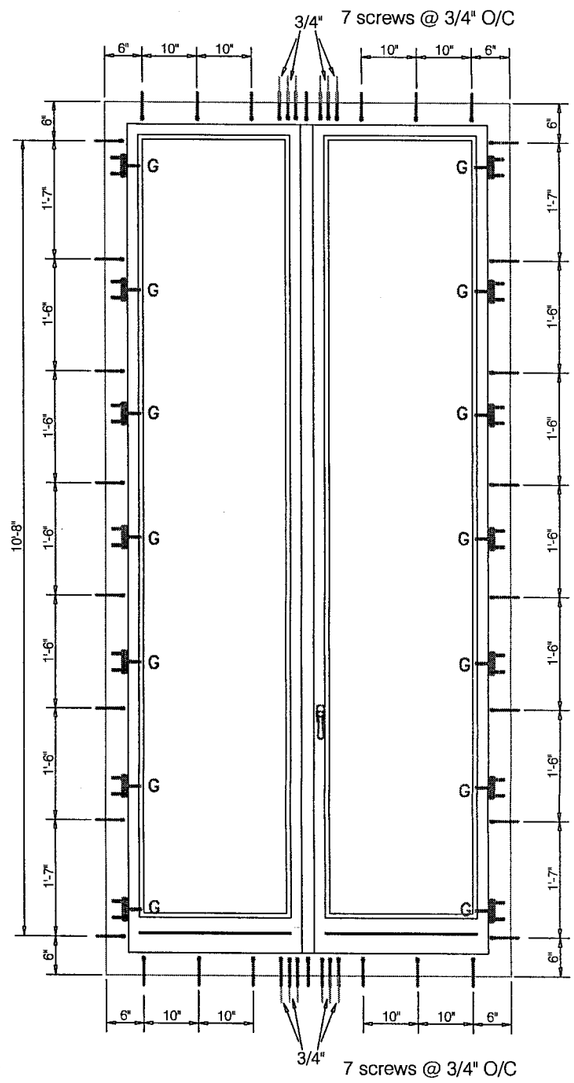

INTERIOR ELEVATIONS

ALL WOOD IS MAHOGANY

DLO=DAYLIGHT OPENING MAX

UNIT TYPE:	D-DT (outswing)
HINGED SIDE:	RIGHT (active leaf)
ARCH. TYPE:	1
GLAZING TYPE:	STANDARD BENT GLASS OR VIRACON GV200
MUNTINS:	NONE

NOTE:
FOR HARDWARE PARTS SPECIFICATION
SEE SHEETS 20,21,22

PRODUCT RENEWED
as complying with the Florida
Building Code
Acceptance No 07-0918.05
Expiration Date 10/12/08
By Ishaq I. Chanda
Miami Dade Product Control
Division

PRODUCT RENEWED
as complying with the Florida
Building Code
Acceptance No 06-0505.03
Expiration Date OCT 12, 2007
By Ishaq I. Chanda
Miami Dade Product Control
Division

APPROVED AS COMPLYING WITH THE
SOUTH FLORIDA BUILDING CODE
DATE AUGUST 23, 2001
BY Ishaq I. Chanda
PRODUCT CONTROL DIVISION
BUILDING CODE COMPLIANCE OFFICE
ACCEPTANCE NO. 01-0209.14

TISCHLER UND SOHN
Tischler und Sohn (U.S.A.) Ltd.
Six Suburban Avenue
Stamford, CT06901 USA
Tel.: 203/674-0600
Fax: 203/674-0601
E-mail: dtwedt-tischler @worldnet.att.net

DADE COUNTY - FLORIDA
TESTING OF WOOD WINDOWS & DOORS

ELEVATION OF 2'-10 1/2" X 11'-8"
OUTSWING MAHOGANY FRENCH DOOR

VIPIN N. TOLAT, P.E.
FL. REG.# 12847

6/6/01

Date: Nov. 29.99 | Revised 5/28/2001 | Sheet 4 of 34 | Scale: 1/2"=1'-0" (1:24) | Drawn by: K.M. | Drawing No. TS-8

Design Pressure Rating (Positive)	+57.9 PSF
Design Pressure Rating (Negaitive)	-67.8 PSF

NOTE:
PROVIDE 6mm DIAMETER x 120mm WOOD SCREWS TO STRUCTURAL WOOD FRAME 1 1/2" PENETRATION- 6" FROM EACH CORNER & SPACED AS INDICATED BELOW - TOTAL 24 - ITEM K, SHEET 18.

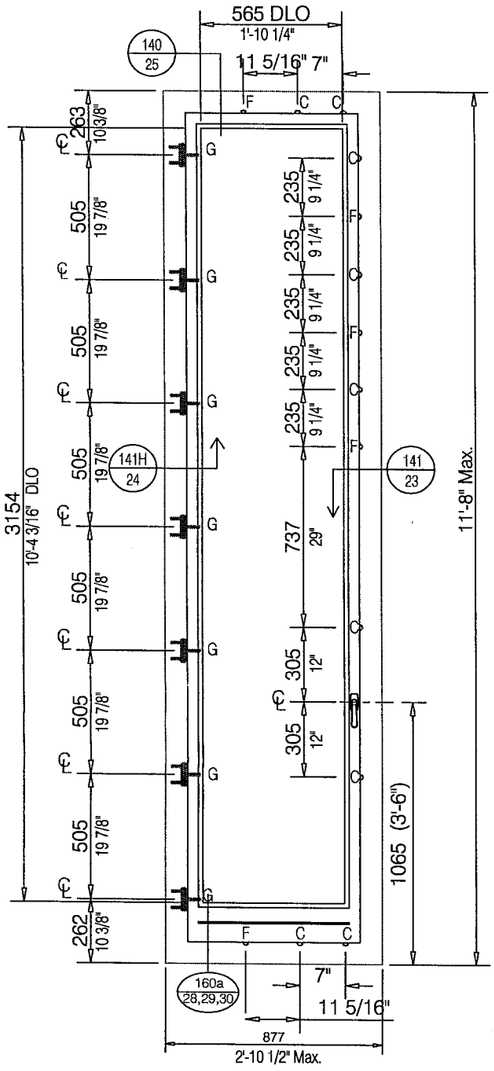

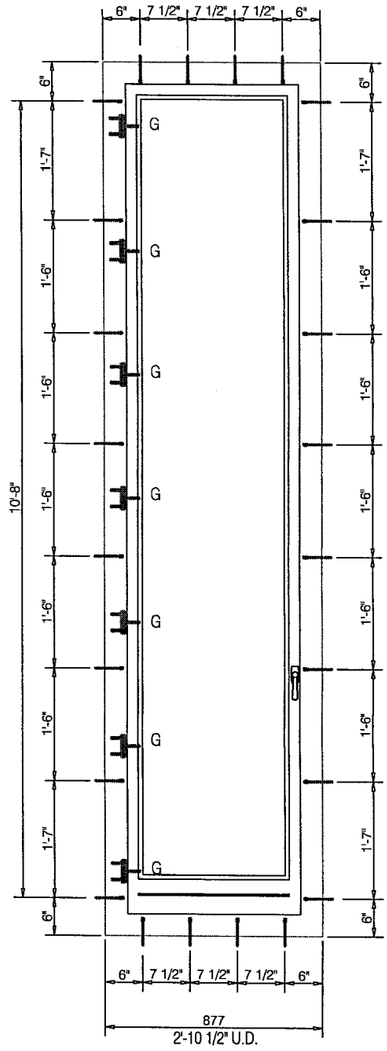

INTERIOR ELEVATIONS

ALL WOOD IS MAHOGANY

DLO = Daylight opening (max.)

UNIT TYPE:	DT (outswing)
HINGED SIDE:	LEFT
ARCH. TYPE:	1S
GLAZING TYPE:	STANDARD BENT GLASS OR VIRACON GV200
MUNTINS:	NONE

NOTE:
FOR HARDWARE PARTS SPECIFICATION
SEE SHEETS 20,21,22

PRODUCT RENEWED
as complying with the Florida Buiding Code
Acceptance No 07-0918.05
Expiration Date 10/12/08
By Ishaq I. Chanda
Miami Dade Product Control Division

PRODUCT RENEWED
as complying with the Florida Building Code
Acceptance No 06-0505.03
Expiration Date OCT 12 2007
By Ishaq I. Chanda
Miami Dade Product Control Division

APPROVED AS COMPLYING WITH THE SOUTH FLORIDA BUILDING CODE
DATE AUGUST 23, 2001
BY Ishaq I. Chanda
PRODUCT CONTROL DIVISION
BUILDING CODE COMPLIANCE OFFICE
ACCEPTANCE NO. 01-0209.14

TISCHLER UND SOHN
Tischler und Sohn (U.S.A.) Ltd.
Six Suburban Avenue
Stamford, CT06901 USA
Tel.: 203/674-0600
Fax: 203/674-0601
E-mail: dtwedt-tischler @worldnet.att.net

DADE COUNTY - FLORIDA
TESTING OF WOOD WINDOWS & DOORS

ELEVATION OF MAHOGANY FIXED LITE 2'-10 1/2" X 11'-8"

VIPIN N. TOLAT, P.E.
FL. REG.# 12847

6/6/01

Date: Nov. 29.99	Revised 5/28/2001	Sheet 5 of 34	Scale: 1/2"=1'-0" (1:24)	Drawn by: K.M.	Drawing No. TS-8

Design Pressure Rating (Positive)	+57.9 PSF
Design Pressure Rating (Negaitive)	-67.8 PSF

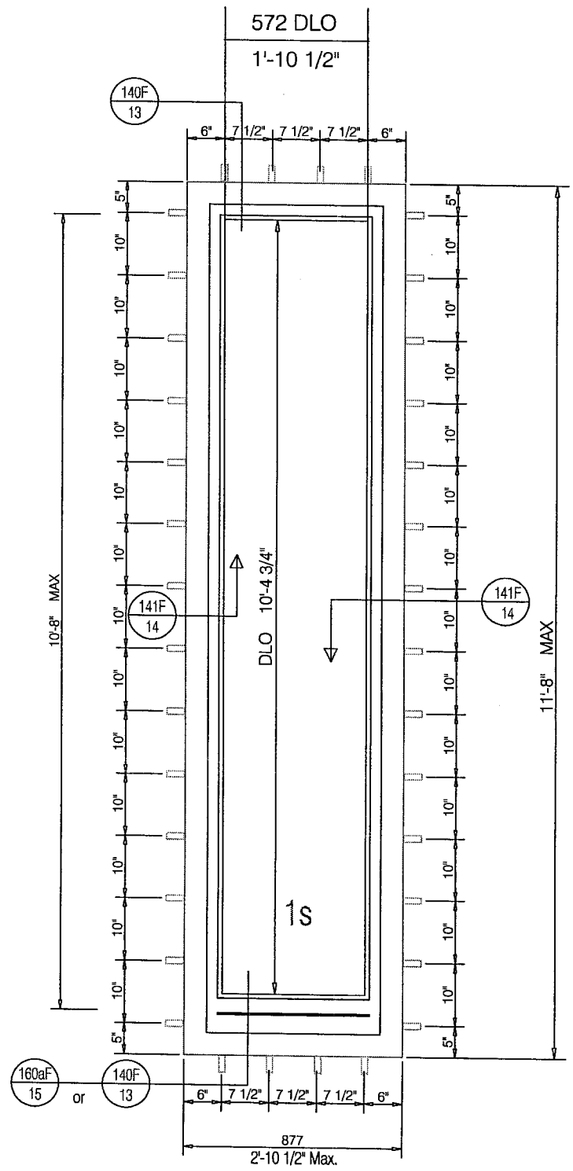

DLO = Daylight Opening (max.)

PRODUCT RENEWED
as complying with the Florida
Building Code
Acceptance No. 07-0918.05
Expiration Date OCT 12, 2008
By Ishaq I. Chanda
Miami Dade Product Control
Division

ALL MEMBERS ARE ANCHORED TO THE STRUCTURE
OF 6" FROM EACH CORNER & 10" ON CENTERS.
STEEL CLIPS USED FOR ATTACHMENT OF FIXED UNITS.
SEE SHEET 18 FOR DETAILS. ITEM L, SHEET 18.

INTERIOR ELEVATIONS ALL WOOD IS MAHOGANY.

UNIT TYPE: FFT	(FIXED)
ARCH. TYPE:	1S
GLAZING TYPE:	STANDARD BENT GLASS OR VIRACON GV200
MUNTINS:	NONE

PRODUCT RENEWED
as complying with the Florida
Building Code
Acceptance No. 06-0505.03
Expiration Date OCT 12, 2007
By Ishaq I. Chanda
Miami Dade Product Control
Division

NOTE:
FOR HARDWARE PARTS SPECIFICATION
SEE SHEET 18

APPROVED AS COMPLYING WITH THE:
SOUTH FLORIDA BUILDING CODE
DATE AUGUST 23, 2001
BY Ishaq I. Chanda
PRODUCT CONTROL DIVISION
BUILDING CODE COMPLIANCE OFFICE
ACCEPTANCE NO. 01-0709.14

TISCHLER UND SOHN
Tischler und Sohn (U.S.A.) Ltd.
Six Suburban Avenue
Stamford, CT06901 USA
Tel.: 203/674-0600
Fax: 203/674-0601
E-mail: dtwedt-tischler @worldnet.att.net

DADE COUNTY - FLORIDA
TESTING OF WOOD WINDOWS & DOORS

ELEVATION OF
5'-4" X 11'-8" OUTSWING MAHOGANY FRENCH DOOR

VIPIN N. TOLAT, P.E.
FL. REG.# 12847

6/6/01

Date: Nov. 29.99 | Revised 5/28/2001 | Sheet 6 of 34 | Scale: 1/2"=1'-0" (1:24) | Drawn by: K.M. | Drawing No. TS-8

Design Pressure Rating (Positive)	+57.9 PSF
Design Pressure Rating (Negaitive)	-67.8 PSF

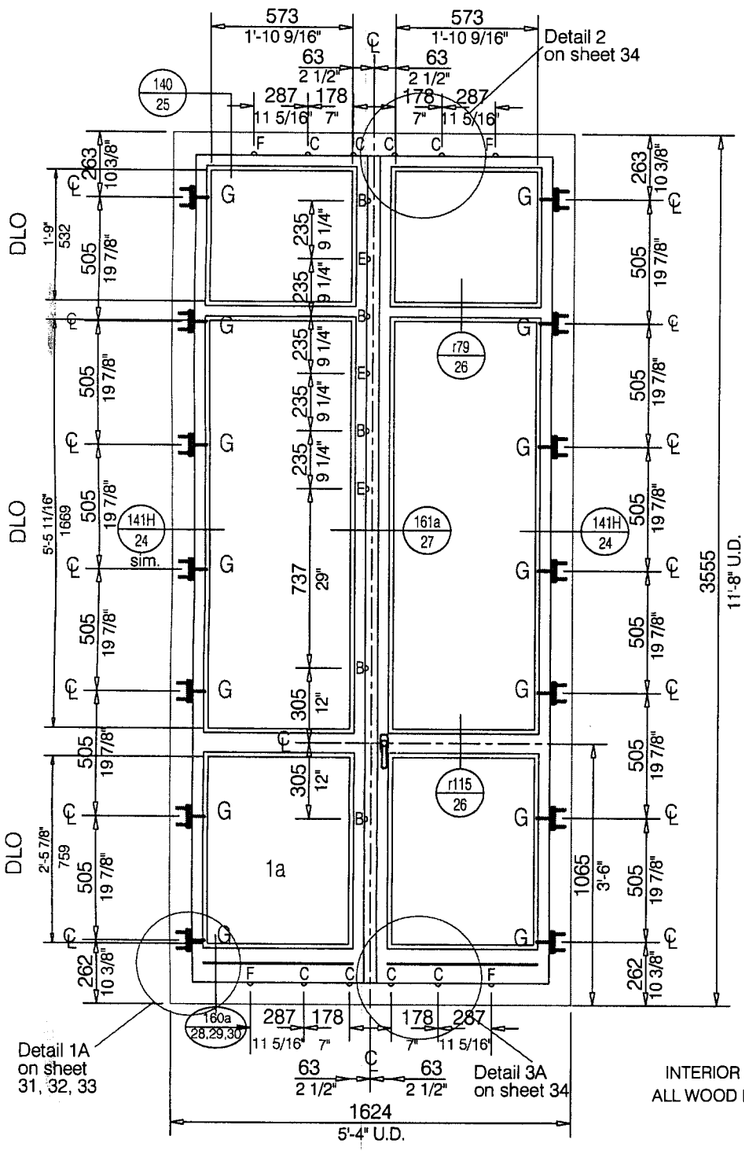

INTERIOR ELEVATIONS
ALL WOOD IS MAHOGANY

NOTE:
PROVIDE 6mm DIAMETER x 120mm WOOD SCREWS
TO STRUCTURAL WOOD FRAME 1 1/2" PENETRATION-
6" FROM EACH CORNER & SPACED AS
INDICATED BELOW - TOTAL 44 - ITEM K, SHEET 18.

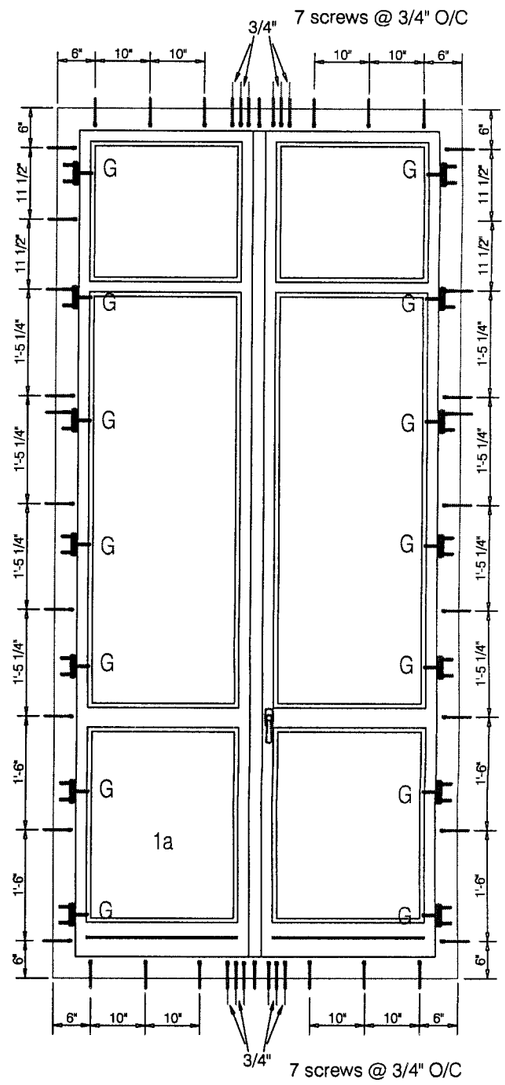

DLO=DAYLIGHT OPENING MAX

UNIT TYPE:	D-DT (outswing)
HINGED SIDE:	RIGHT (active leaf)
ARCH. TYPE:	1a
GLAZING TYPE:	STANDARD BENT GLASS OR VIRACON GV200
MUNTINS:	REAL 79 & 115

NOTE:
FOR HARDWARE PARTS SPECIFICATION
SEE SHEETS 20,21,22

PRODUCT RENEWED
as complying with the Florida
Building Code
Acceptance No 07-0918.05
Expiration Date 6/12/08
By Ishaq I. Chanda
Miami Dade Product Control
Division

PRODUCT RENEWED
as complying with the Florida
Building Code
Acceptance No 06-0505.03
Expiration Date 6/12/2007
By Ishaq I. Chanda
Miami Dade Product Control
Division

APPROVED AS COMPLYING WITH THE
SOUTH FLORIDA BUILDING CODE
DATE AUGUST 23, 2001
BY Ishaq I. Chanda
PRODUCT CONTROL DIVISION
BUILDING CODE COMPLIANCE OFFICE
ACCEPTANCE NO. 01-0209.14

TISCHLER UND SOHN
Tischler und Sohn (U.S.A.) Ltd.
Six Suburban Avenue
Stamford, CT06901 USA
Tel.: 203/674-0600
Fax: 203/674-0601
E-mail: dtwedt-tischler @worldnet.att.net

DADE COUNTY - FLORIDA
TESTING OF WOOD WINDOWS & DOORS

ELEVATION OF
2'-10 1/2" X 11'-8" OUTSWING MAHOGANY FRENCH DOOR

VIPIN N. TOLAT, P.E.
FL. REG.# 12847

6/6/01

Date: Nov. 29.99 | Revised 5/28/2001 | Sheet 7 of 34 | Scale: 1/2"=1'-0" (1:24) | Drawn by: K.M. | Drawing No. TS-8

Design Pressure Rating (Positive)	+57.9 PSF
Design Pressure Rating (Negaitive)	-67.8 PSF

NOTE:
PROVIDE 6mm DIAMETER x 120mm WOOD SCREWS TO STRUCTURAL WOOD FRAME 1 1/2" PENETRATION- 6" FROM EACH CORNER & SPACED AS INDICATED BELOW - TOTAL 26 - ITEM K, SHEET 18.

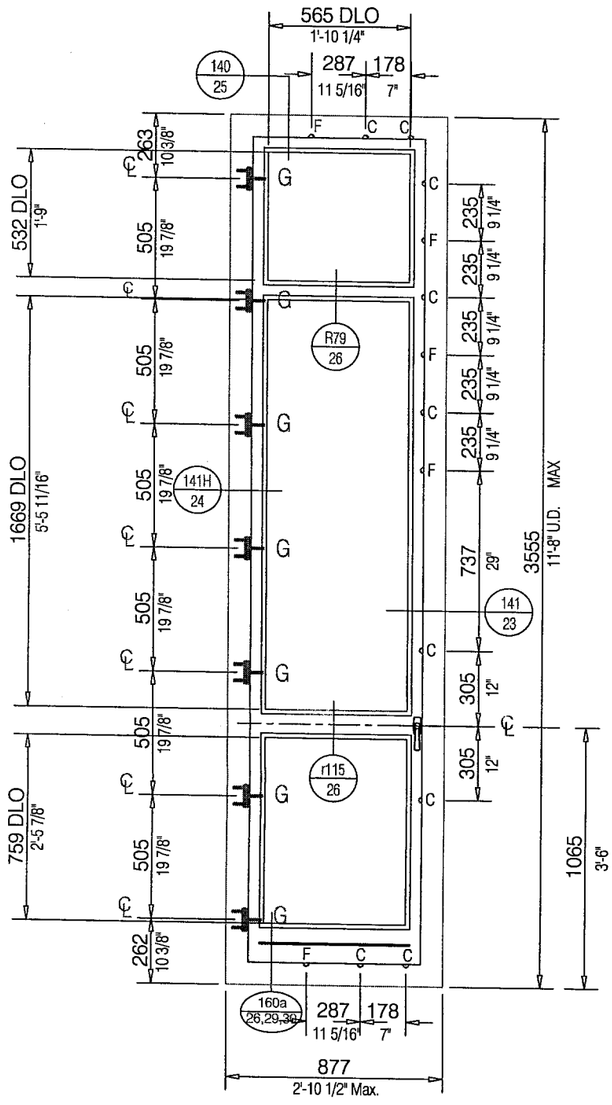

INTERIOR ELEVATIONS
ALL WOOD IS MAHOGANY

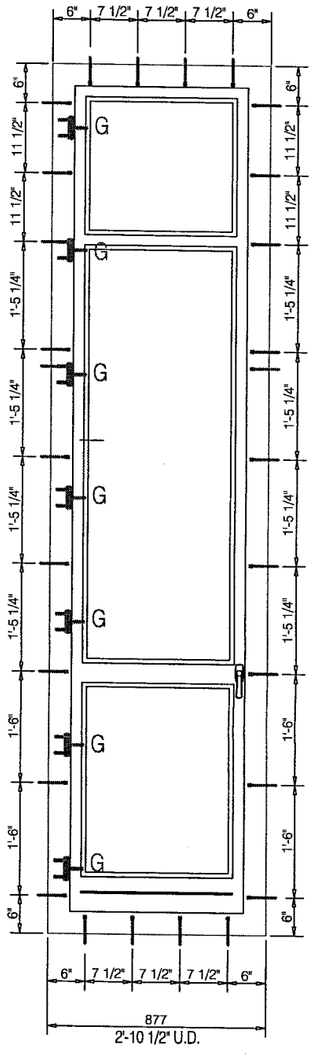

DLO = Daylight Opening (max.)

UNIT TYPE:	DT (outswing)
HINGED SIDE:	LEFT
ARCH. TYPE:	1R
GLAZING TYPE:	STANDARD BENT GLASS OR VIRACON GV200
MUNTINS:	REAL 79 & 115

NOTE:
FOR HARDWARE PARTS SPECIFICATION
SEE SHEETS 20,21,22

PRODUCT RENEWED
as complying with the Florida
Building Code
Acceptance No 07-0918.05
Expiration Date 10/12/08
By Ishaq I. Chanda
Miami Dade Product Control
Division

PRODUCT RENEWED
as complying with the Florida
Building Code
Acceptance No 06-0505.05
Expiration Date OCT 12, 2007
By Ishaq I. Chanda
Miami Dade Product Control
Division

APPROVED AS COMPLYING WITH THE
SOUTH FLORIDA BUILDING CODE
DATE AUGUST 23, 2001
BY Ishaq I. Chanda
PRODUCT CONTROL DIVISION
BUILDING CODE COMPLIANCE OFFICE
ACCEPTANCE NO. 01-0209.14

TISCHLER UND SOHN

Tischler und Sohn (U.S.A.) Ltd.
Six Suburban Avenue
Stamford, CT06901 USA
Tel.: 203/674-0600
Fax: 203/674-0601
E-mail: dtwedt-tischler @worldnet.att.net

DADE COUNTY - FLORIDA
TESTING OF WOOD WINDOWS & DOORS

ELEVATION OF
2'-10 1/2" X 11'-8" MAHOGANY FIXED LITE

VIPIN N. TOLAT, P.E.
FL. REG.# 12847

6/6/01

Date: Nov. 29.99	Revised 5/28/2001	Sheet 8 of 34	Scale: 1/2"=1'-0" (1:24)	Drawn by: K.M.	Drawing No. TS-8

Design Pressure Rating (Positive)	+57.9 PSF
Design Pressure Rating (Negaitive)	-67.8 PSF

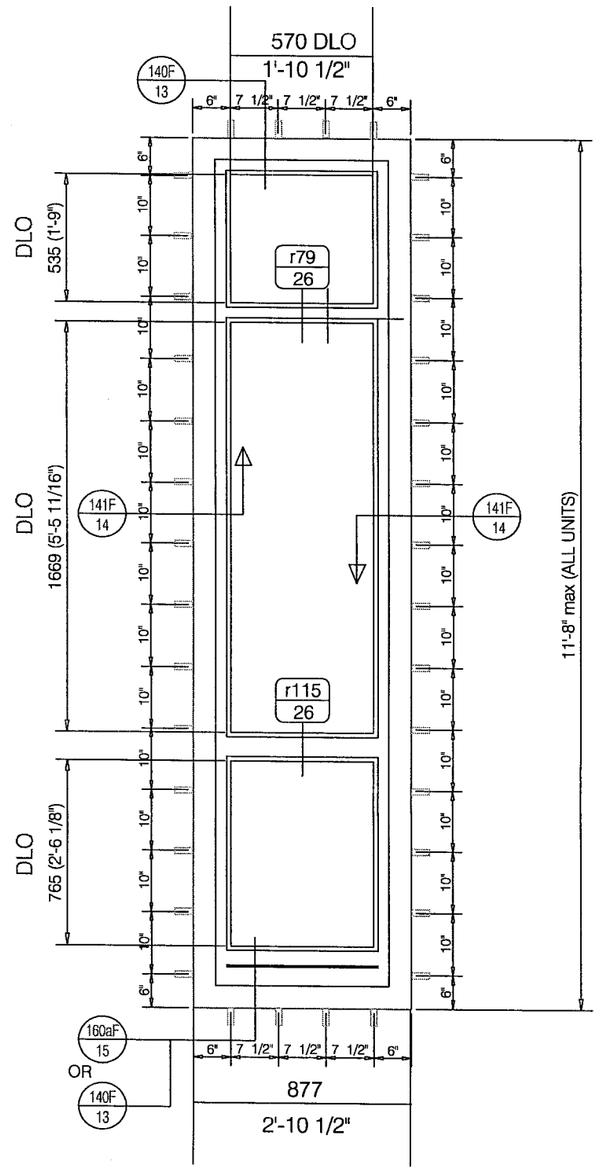

DLO = Daylight Opening (max.)

INTERIOR ELEVATIONS

ALL WOOD IS MAHOGANY

ALL MEMBERS ARE ANCHORED TO THE STRUCTURE
OF 6" FROM EACH CORNER & 10" ON CENTERS.
STEEL CLIPS USED FOR ATTACHMENT OF FIXED UNITS.
SEE SHEET 18 FOR DETAILS - ITEM L, SHEET 18

INTERIOR ELEVATIONS ALL WOOD IS MAHOGANY.

UNIT TYPE: FFT	(FIXED)
ARCH. TYPE:	1S
GLAZING TYPE:	STANDARD BENT GLASS OR VIRACON GV200
MUNTINS:	NONE

NOTE:
FOR HARDWARE PARTS SPECIFICATION
SEE SHEET 18

PRODUCT RENEWED
as complying with the Florida Building Code
Acceptance No 07-0918.05
Expiration Date 10/12/08
By Ishaq I. Chanda
Miami Dade Product Control Division

PRODUCT RENEWED
as complying with the Florida Building Code
Acceptance No 06-0505.05
Expiration Date OCT 13, 2007
By Ishaq I. Chanda
Miami Dade Product Control Division

APPROVED AS COMPLYING WITH THE
SOUTH FLORIDA BUILDING CODE
DATE AUGUST 23, 2001
BY Ishaq I. Chanda
PRODUCT CONTROL DIVISION
BUILDING CODE COMPLIANCE OFFICE
ACCEPTANCE NO. 01-0209.14

TISCHLER UND SOHN
Tischler und Sohn (U.S.A.) Ltd.
Six Suburban Avenue
Stamford, CT06901 USA
Tel.: 203/674-0600
Fax: 203/674-0601
E-mail: dtwedt-tischler @worldnet.att.net

DADE COUNTY - FLORIDA
TESTING OF WOOD WINDOWS & DOORS

HEAD SECTION OF
OUTSWING MAHOGANY DOOR

VIPIN N. TOLAT, P.E.
FL. REG.# 12847

6/6/01

Date: Nov. 29.99 | revised: 01.15.01 | Sheet 9 of 34 | Scale: Full (1:1) | Drawn by: K.M. | Drawing No. TS-8

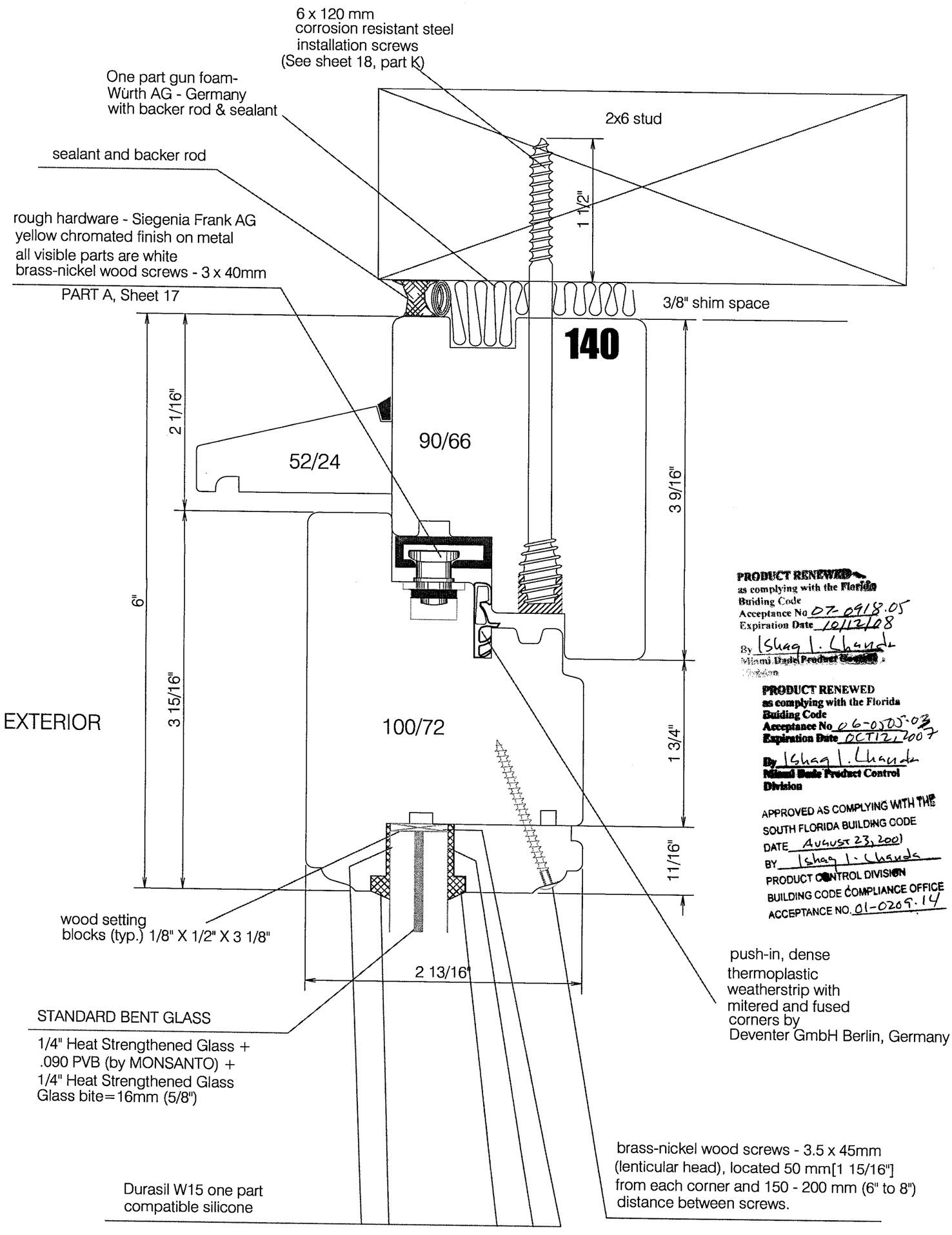

PRODUCT RENEWED
as complying with the Florida
Building Code
Acceptance No 07-0918.05
Expiration Date 10/12/08
By Ishaq I. Chanda
Miami Dade Product Control
Division

PRODUCT RENEWED
as complying with the Florida
Building Code
Acceptance No 06-0705.03
Expiration Date OCT 12, 2007
By Ishaq I. Chanda
Miami Dade Product Control
Division

APPROVED AS COMPLYING WITH THE
SOUTH FLORIDA BUILDING CODE
DATE August 23, 2001
BY Ishaq I. Chanda
PRODUCT CONTROL DIVISION
BUILDING CODE COMPLIANCE OFFICE
ACCEPTANCE NO. 01-0205.14

TISCHLER UND SOHN
Tischler und Sohn (U.S.A.) Ltd.
Six Suburban Avenue
Stamford, CT06901 USA
Tel.: 203/674-0600
Fax: 203/674-0601
E-mail: dtwedt-tischler @worldnet.att.net

DADE COUNTY - FLORIDA
TESTING OF WOOD WINDOWS & DOORS

JAMB SECTION OF OUTSWING MAHOGANY WINDOW OR DOOR

VIPIN N. TOLAT, P.E.
FL. REG.# 12847

6/6/01

Date: Nov. 29.99 | revised: 01.15.01 | Sheet 10 of 34 | Scale: Full (1:1) | Drawn by: K.M. | Drawing No. TS-8

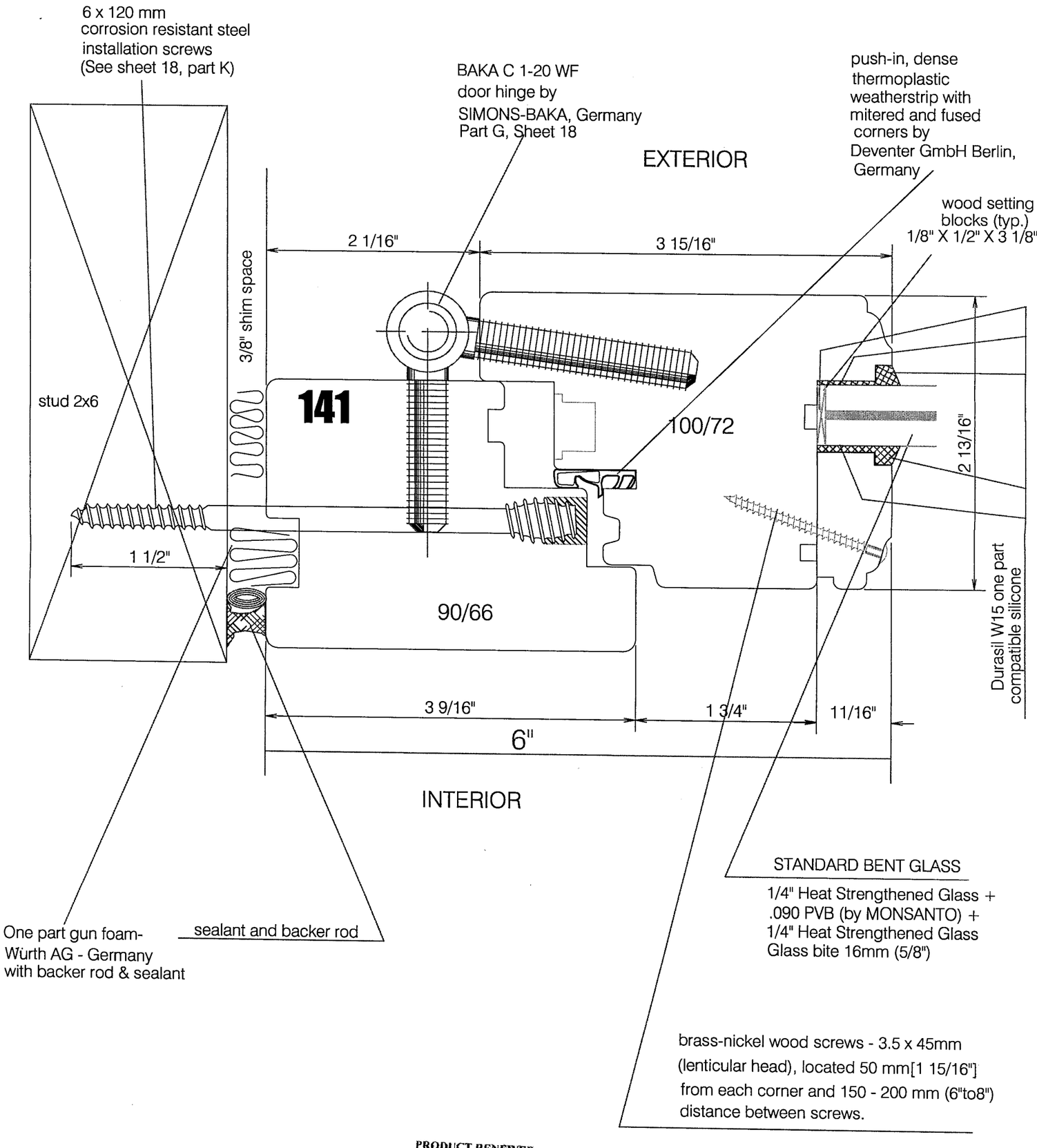

PRODUCT RENEWED
as complying with the Florida
Building Code
Acceptance No. 07-0918.05
Expiration Date 10/12/06
By Ishaq I. Chanda
Miami Dade Product Control
Division

PRODUCT RENEWED
as complying with the Florida
Building Code
Acceptance No. 06-0505.03
Expiration Date OCT 12, 2007
By Ishaq I. Chanda
Miami Dade Product Control
Division

APPROVED AS COMPLYING WITH THE
SOUTH FLORIDA BUILDING CODE
DATE AUGUST 23, 2001
BY Ishaq I. Chanda
PRODUCT CONTROL DIVISION
BUILDING CODE COMPLIANCE OFFICE
ACCEPTANCE NO. 01-0209.14

TISCHLER UND SOHN
Tischler und Sohn (U.S.A.) Ltd.
Six Suburban Avenue
Stamford, CT06901 USA
Tel.: 203/674-0600
Fax: 203/674-0601
E-mail: dtwedt-tischler @worldnet.att.net

DADE COUNTY - FLORIDA
TESTING OF WOOD WINDOWS & DOORS

SILL SECTION OF OUTSWING MAHOGANY DOOR

VIPIN N. TOLAT, P.E.
FL. REG.# 12847

6/16/01

Date: Nov. 29.99 | revised: 01.15.01 | Sheet 11 of 34 | Scale: Full (1:1) | Drawn by: K.M. | Drawing No. TS8

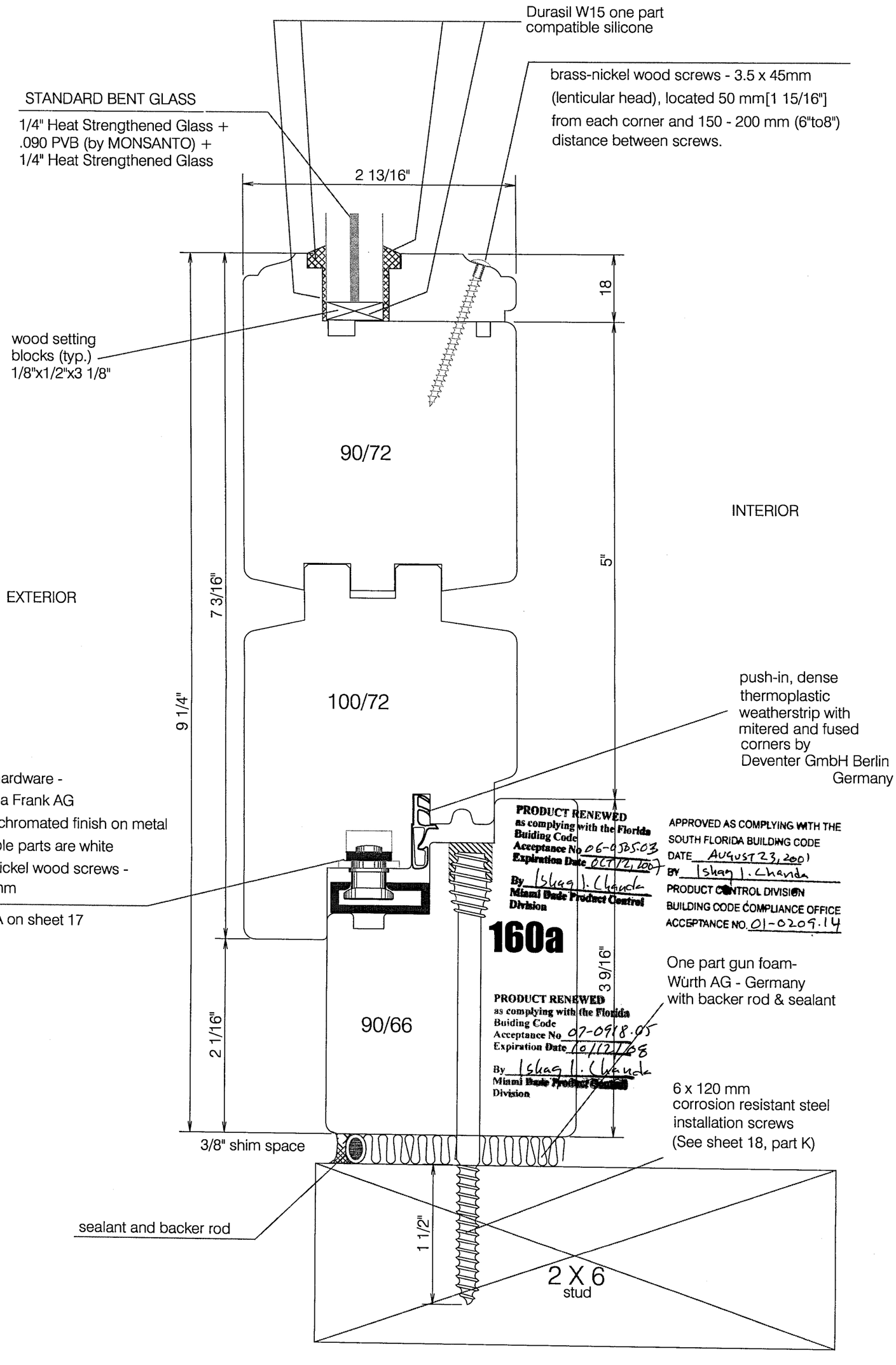

TISCHLER UND SOHN
Tischler und Sohn (U.S.A.) Ltd.
Six Suburban Avenue
Stamford, CT06901 USA
Tel.: 203/674-0600
Fax: 203/674-0601
E-mail: dtwedt-tischler @worldnet.att.net

DADE COUNTY - FLORIDA
TESTING OF WOOD WINDOWS & DOORS

STILE SECTION OF
OUTSWING MAHOGANY FRENCH DOOR

VIPIN N. TOLAT, P.E.
FL. REG.# 12847

6/6/01

Date: Nov. 29.99 | revised: 01.15.01 | Sheet 12 of 34 | Scale: Full (1:1) | Drawn by: K.M. | Drawing No. TS8

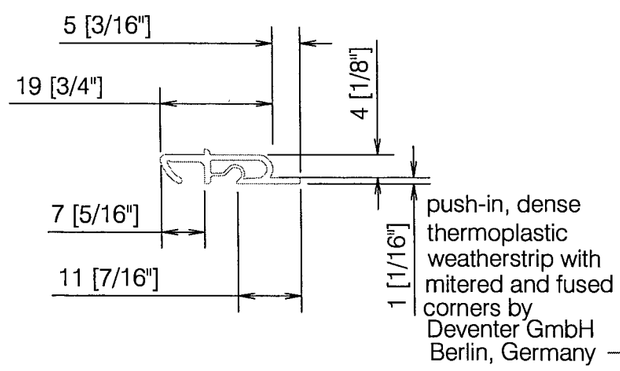

push-in, dense thermoplastic weatherstrip with mitered and fused corners by Deventer GmbH Berlin, Germany

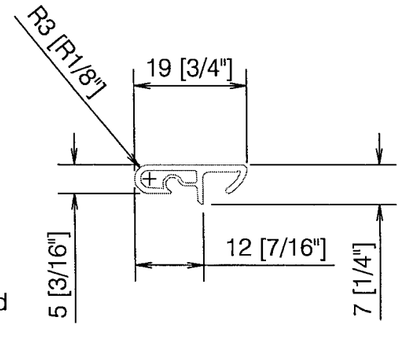

PRODUCT RENEWED
as complying with the Florida Building Code
Acceptance No 07-0918.05
Expiration Date 10/12/08
By Ishaq I. Chanda
Miami Dade/Product Control Division

PRODUCT RENEWED
as complying with the Florida Building Code
Acceptance No 06-0505.03
Expiration Date OCT 12, 2007
By Ishaq I. Chanda
Miami Dade Product Control Division

EXTERIOR

APPROVED AS COMPLYING WITH THE SOUTH FLORIDA BUILDING CODE
DATE August 23, 2001
BY Ishaq I. Chanda
PRODUCT CONTROL DIVISION
BUILDING CODE COMPLIANCE OFFICE
ACCEPTANCE NO. 01-0209.14

8 mm x 40 mm [5/16" x 1 9/16"] steel (Astm A36 or better) thru the full length of sash (milled to 5 mm x 110 mm long at handle location)

astragal glued to frame w/ DURO-LOK 260 glue by National Starch & Chemical GmbH - Germany

8 screws [4 mm x 45 mm] 14 1/2"oc

STANDARD BENT GLASS
1/4" Heat Strengthened Glass + .090 PVB (by MONSANTO) + 1/4" Heat Strengthened Glass
Glass bite 16mm (5/8")

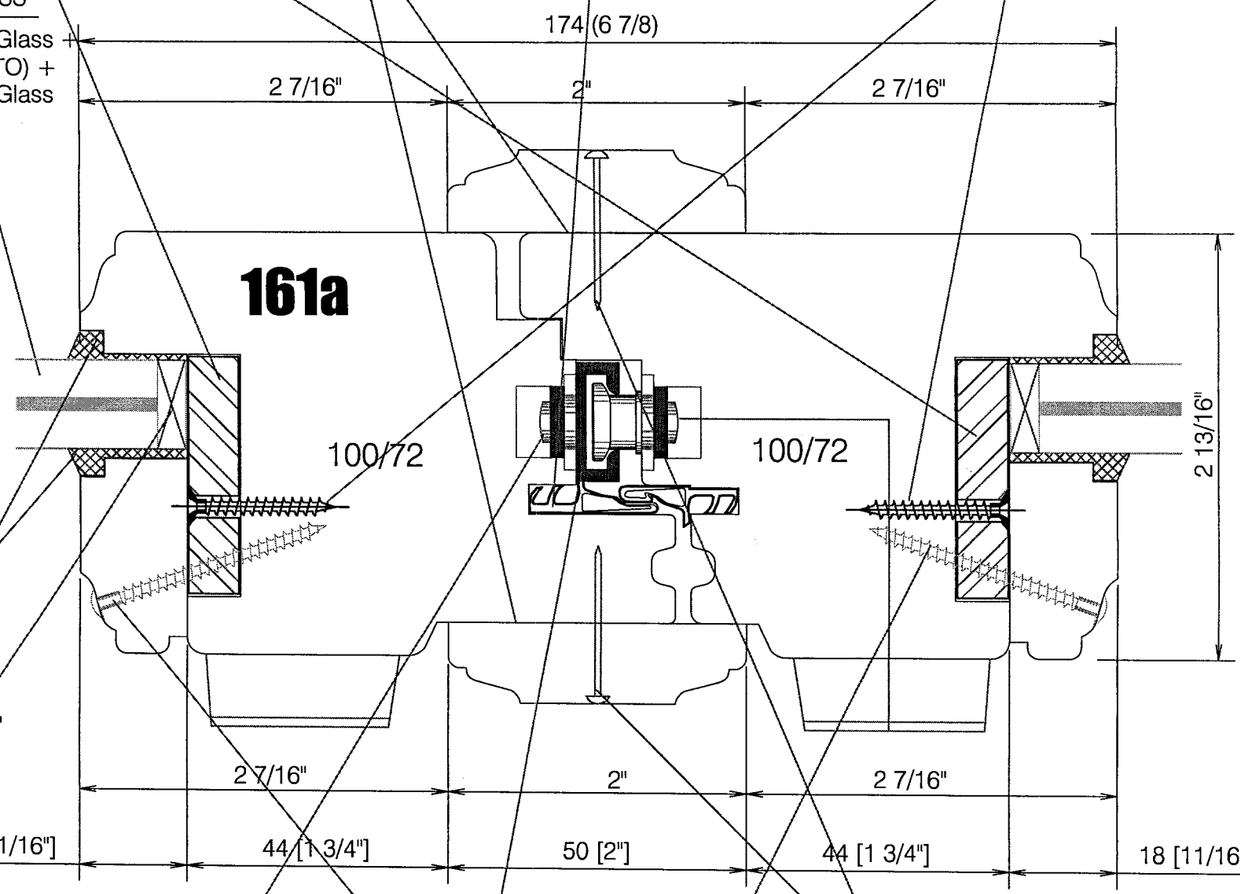

Durasil W15 one part compatible silicone

wood setting blocks (typ.) 1/8"x1/2"x3 1/8"

rough hardware - Siegenia Frank AG
yellow chromated finish on metal
all visible parts are white
brass-nickel wood screws - 3 x 40mm

PART J, Sheet 17

finishing nails 400 mm (16")oc.

brass-nickel wood screws - 3.5 x 45mm (lenticular head), located 50 mm[1 15/16"] from each corner and 150 - 200 mm distance between screws.

INTERIOR

TISCHLER UND SOHN
Tischler und Sohn (U.S.A.) Ltd.
Six Suburban Avenue
Stamford, CT06901 USA
Tel.: 203/674-0600
Fax: 203/674-0601
E-mail: dtwedt-tischler @worldnet.att.net

DADE COUNTY - FLORIDA
TESTING OF WOOD WINDOWS & DOORS

HEAD SECTION OF FIXED LIGHT

VIPIN N. TOLAT, P.E.
FL. REG.# 12847

6/6/01

Date: Nov. 29.99 | revised: 5/28/2001 | Sheet 13 of 34 | Scale: Full (1:1) | Drawn by: K.M. | Drawing No. TS-8

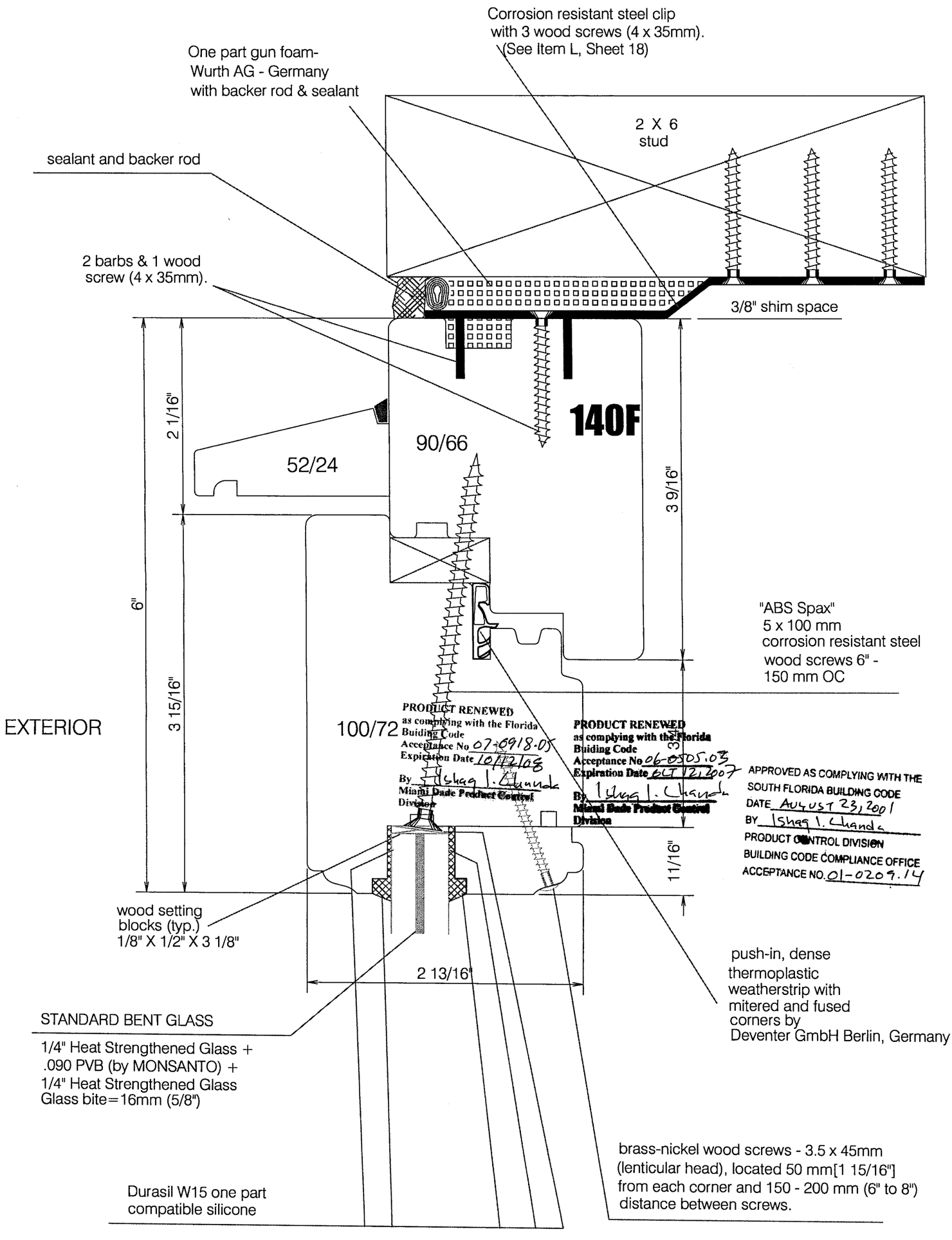

TISCHLER UND SOHN
Tischler und Sohn (U.S.A.) Ltd.
Six Suburban Avenue
Stamford, CT06901 USA
Tel.: 203/674-0600
Fax: 203/674-0601
E-mail: dtwedt-tischler @worldnet.att.net

DADE COUNTY - FLORIDA
TESTING OF WOOD WINDOWS & DOORS

JAMB SECTION OF FIXED LIGHT

VIPIN N. TOLAT, P.E.
FL. REG.# 12847

6/6/01

Date: Nov. 29.99 | revised: 5/28/2001 | Sheet 14 of 34 | Scale: Full (1:1) | Drawn by: K.M. | Drawing No. TS-8

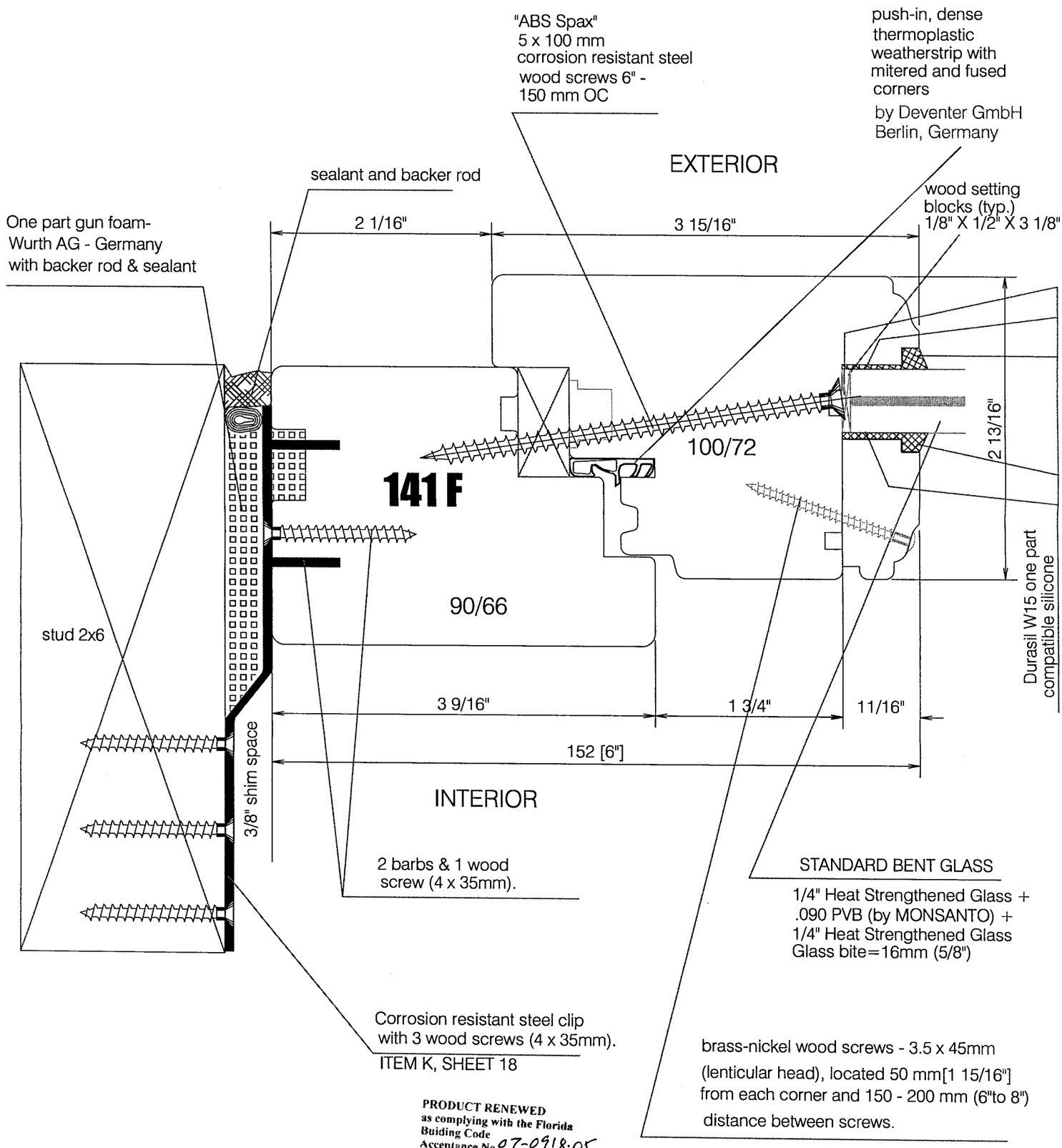

PRODUCT RENEWED
as complying with the Florida
Building Code
Acceptance No. 07-0918.05
Expiration Date 10/12/08
By Ishaq I. Chanda
Miami Dade Product Control
Division

PRODUCT RENEWED
as complying with the Florida
Building Code
Acceptance No. 06-0505.03
Expiration Date OCT 12 2007
By Ishaq I. Chanda
Miami Dade Product Control
Division

APPROVED AS COMPLYING WITH THE
SOUTH FLORIDA BUILDING CODE
DATE August 23, 2001
BY Ishaq I. Chanda
PRODUCT CONTROL DIVISION
BUILDING CODE COMPLIANCE OFFICE
ACCEPTANCE NO. 01-0209.14

TISCHLER UND SOHN
Tischler und Sohn (U.S.A.) Ltd.
Six Suburban Avenue
Stamford, CT06901 USA
Tel.: 203/674-0600
Fax: 203/674-0601
E-mail: dtwedt-tischler @worldnet.att.net

DADE COUNTY - FLORIDA
TESTING OF WOOD WINDOWS & DOORS

SILL SECTION OF FIXED LIGHT

VIPIN N. TOLAT, P.E.
FL. REG.# 12847

6/6/01

Date: Nov. 29.99 | revised: 5/28/01 | Sheet 15 of 34 | Scale: Full (1:1) | Drawn by: K.M. | Drawing No. TS8

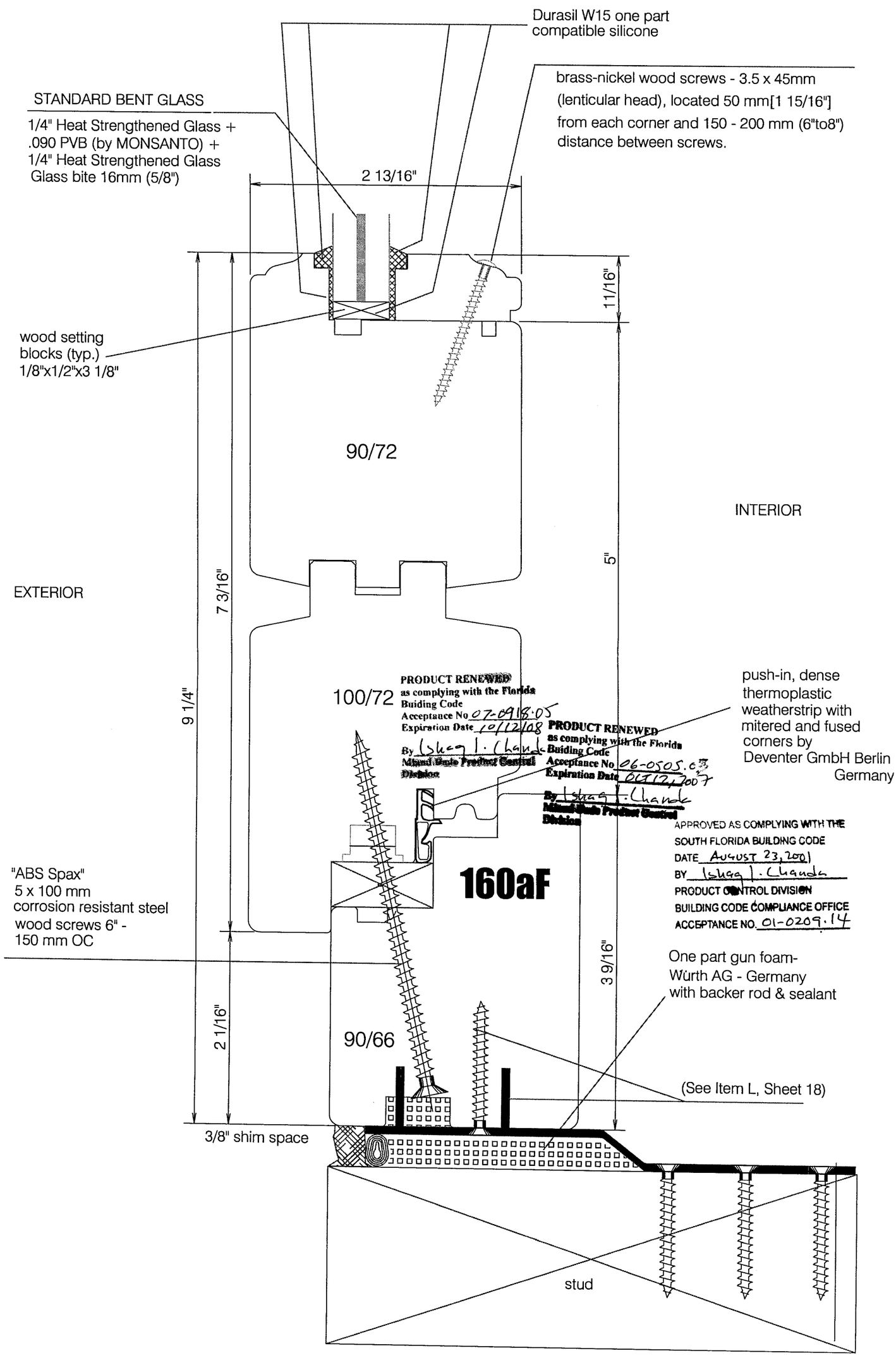

TISCHLER UND SOHN
Tischler und Sohn (U.S.A.) Ltd.
Six Suburban Avenue
Stamford, CT06901 USA
Tel.: 203/674-0600
Fax: 203/674-0601
E-mail: dtwedt-tischler @worldnet.att.net

DADE COUNTY - FLORIDA
TESTING OF WOOD WINDOWS & DOORS

MAHOGANY DOOR AND WINDOW FRAME CONNECTION FOR ROUND TOP OVER 40°

VIPIN N. TOLAT, P.E.
FL. REG.# 12847

6/6/01

Date: Nov. 29.99	revised: 01.15.01	Sheet 16 of 38	Scale: Full (1:1)	Drawn by: K.M.	Drawing No. TS8

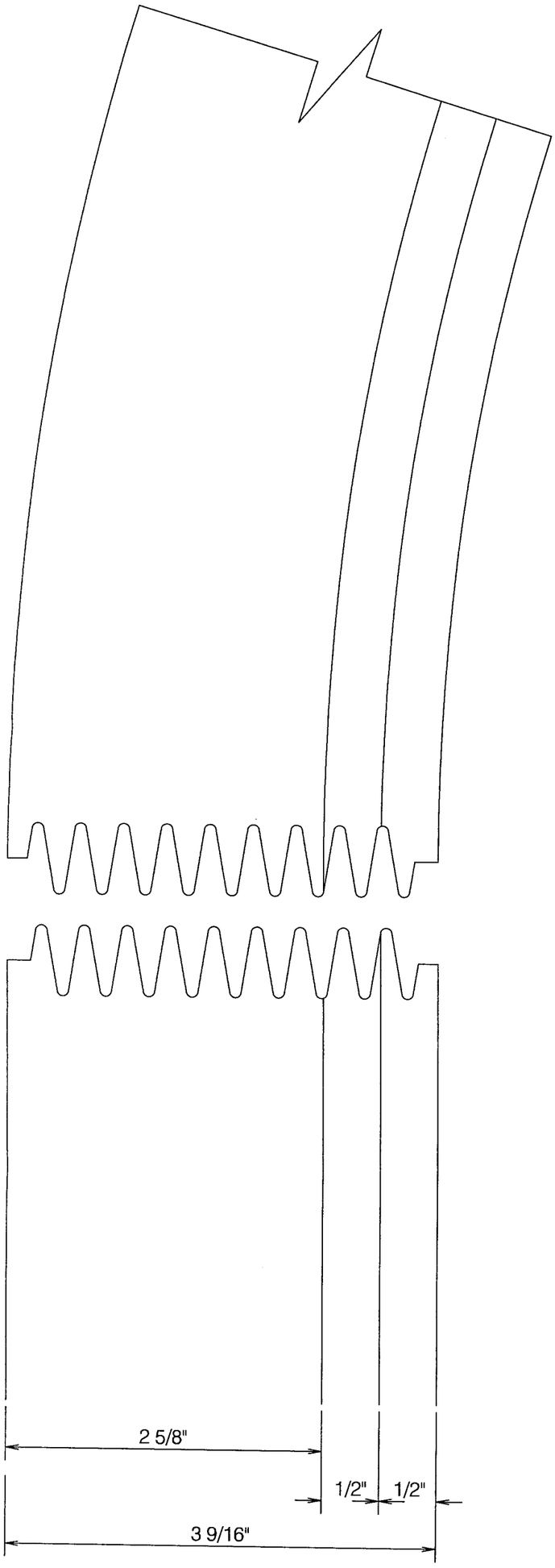

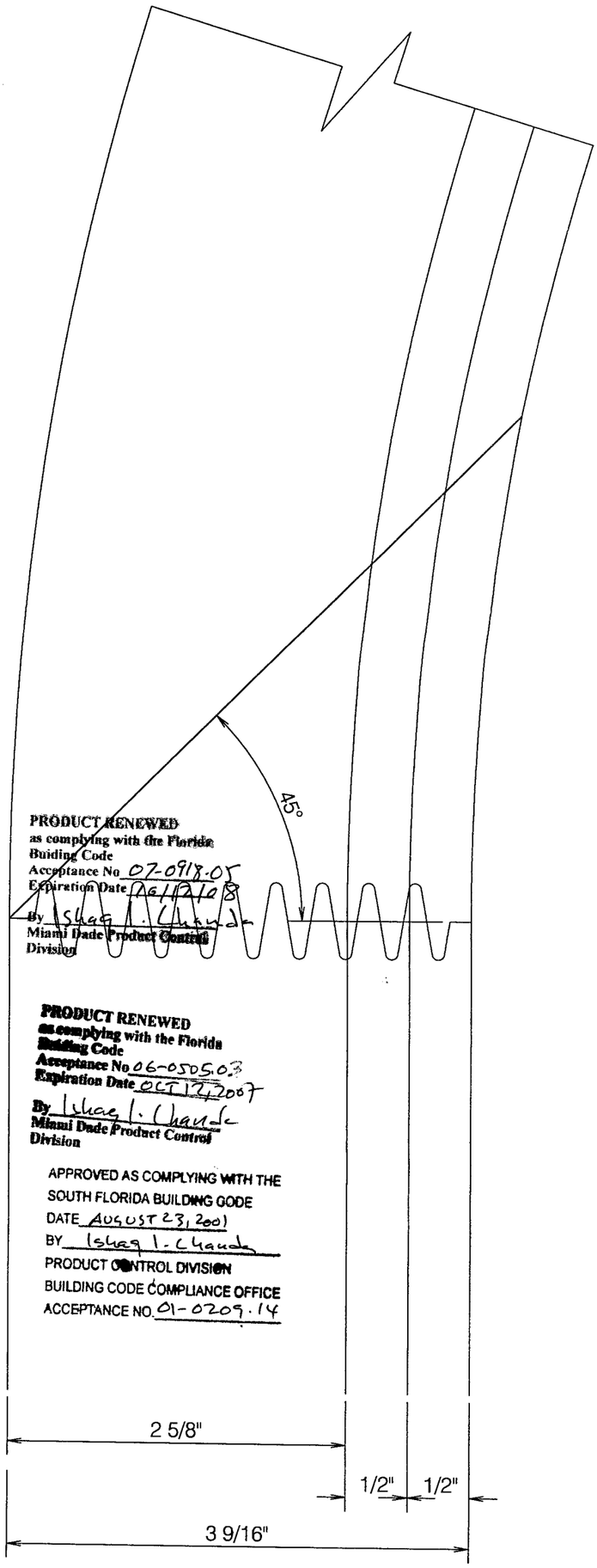

PRODUCT RENEWED
as complying with the Florida
Building Code
Acceptance No 02-0918.05
Expiration Date AUG 1 2 2008
By Ishaq I. Chanda
Miami Dade Product Control
Division

PRODUCT RENEWED
as complying with the Florida
Building Code
Acceptance No 06-0505.03
Expiration Date OCT 17 2007
By Ishaq I. Chanda
Miami Dade Product Control
Division

APPROVED AS COMPLYING WITH THE
SOUTH FLORIDA BUILDING CODE
DATE AUGUST 23, 2001
BY Ishaq I. Chanda
PRODUCT CONTROL DIVISION
BUILDING CODE COMPLIANCE OFFICE
ACCEPTANCE NO. 01-0209.14

TISCHLER UND SOHN
Tischler und Sohn (U.S.A.) Ltd.
Six Suburban Avenue
Stamford, CT06901 USA
Tel.: 203/674-0600
Fax: 203/674-0601
E-mail: dtwedt-tischler @worldnet.att.net

DADE COUNTY - FLORIDA
TESTING OF WOOD WINDOWS & DOORS

HARDWARE LOCKING PARTS

VIPIN N. TOLAT, P.E.
FL. REG.# 12847

Date: Nov. 29.99 | revised: 01.15.01 | Sheet 17 of 34 | Scale: Full (1:1) | Drawn by: K.M. | Drawing No. TS8

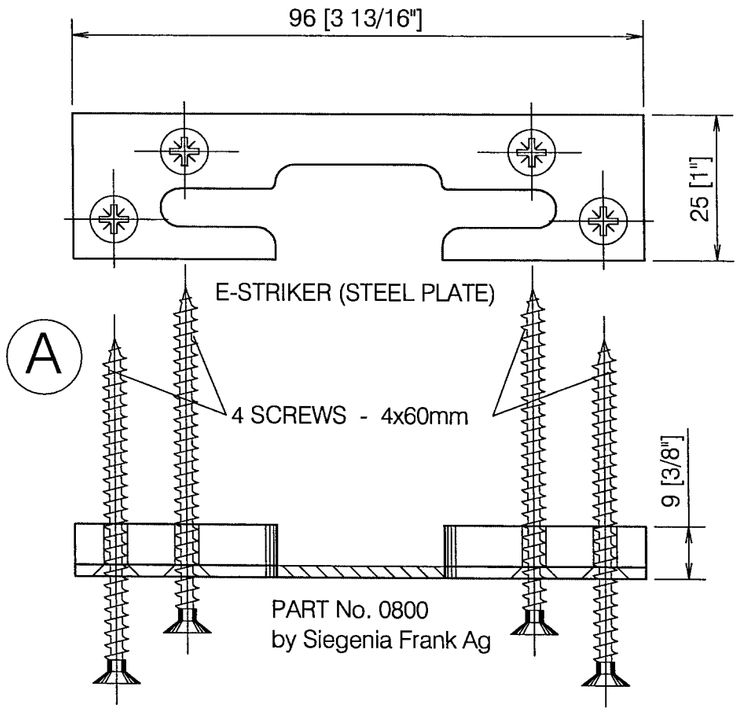

PRODUCT RENEWED
as complying with the Florida
Building Code
Acceptance No 07-0918.05
Expiration Date 10/12/08
By Ishaq I. Chanda
Miami Dade Product Control
Division

PRODUCT RENEWED
as complying with the Florida
Building Code
Acceptance No 06-0505.03
Expiration Date OCT 12, 2007
By Ishaq I. Chanda
Miami Dade Product Control
Division

APPROVED AS COMPLYING WITH THE
SOUTH FLORIDA BUILDING CODE
DATE AUGUST 23, 2001
BY Ishaq I. Chanda
PRODUCT CONTROL DIVISION
BUILDING CODE COMPLIANCE OFFICE
ACCEPTANCE NO. 01-0209.14

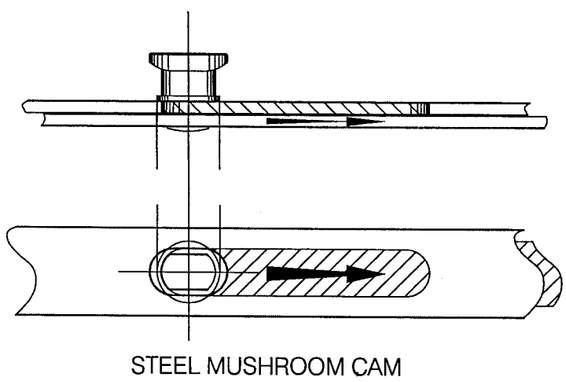

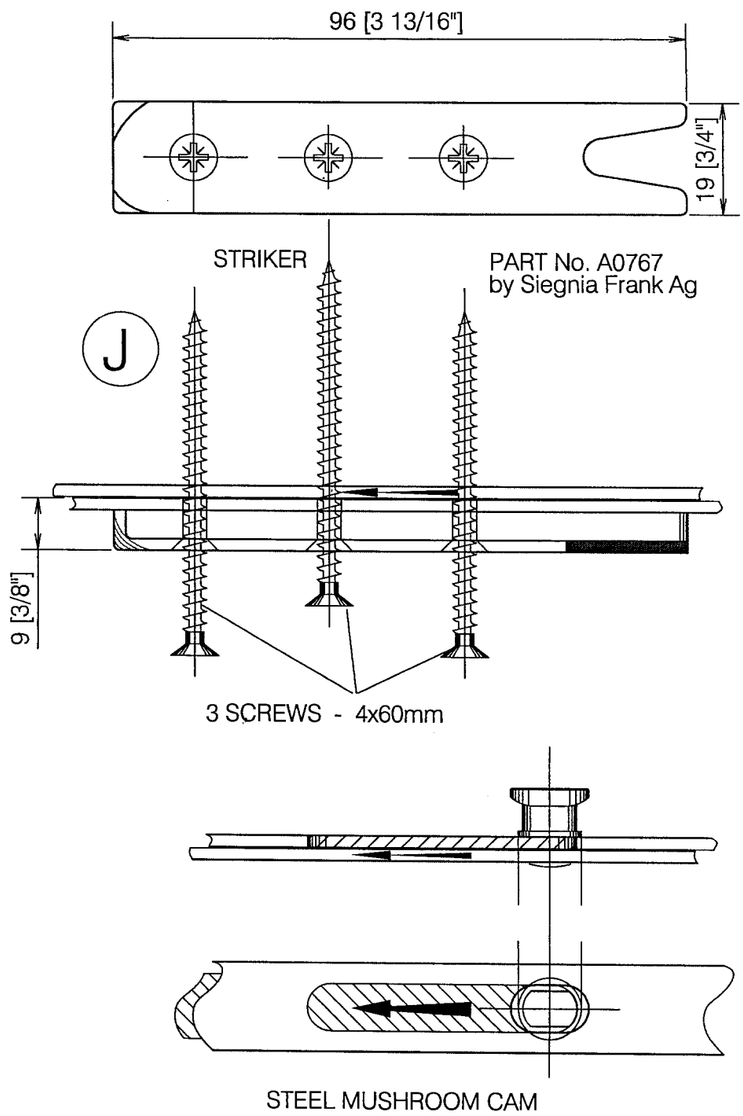

TISCHLER UND SOHN
Tischler und Sohn (U.S.A.) Ltd.
Six Suburban Avenue
Stamford, CT06901 USA
Tel.: 203/674-0600
Fax: 203/674-0601
E-mail: dtwedt-tischler @worldnet.att.net

DADE COUNTY - FLORIDA
TESTING OF WOOD WINDOWS & DOORS

HARDWARE LOCKING PARTS

VIPIN N. TOLAT, P.E.
FL. REG.# 12847

Date: Nov. 29.99 | revised: 5/28/2001 | Sheet 18 of 34 | Scale: Full (1:1) | Drawn by: K.M. | Drawing No. TS8

BAKA C 1-20 WF Door Hinge by Simons Werk GmbH

PINS - s/s - with or without turn-down for set screw (50/50)
Top & bottom barrels (attached to frame) - s/s solid.
Center barrel (attached to leaf) - s/s with nylon bushing.

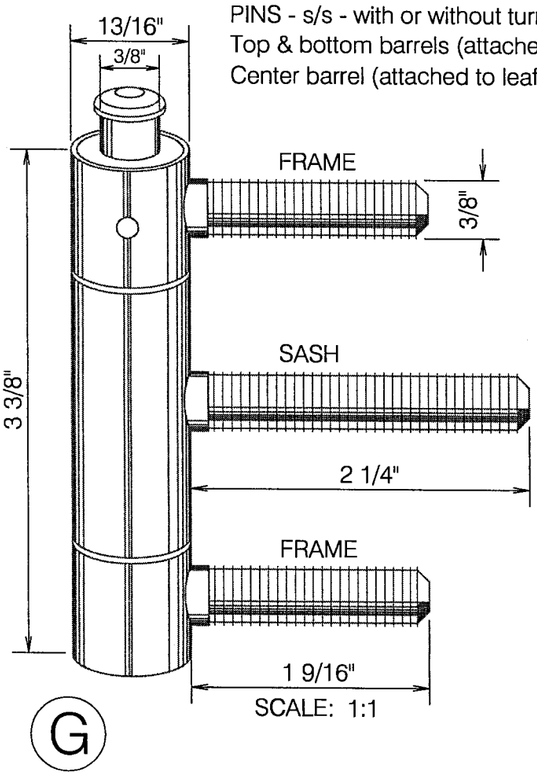

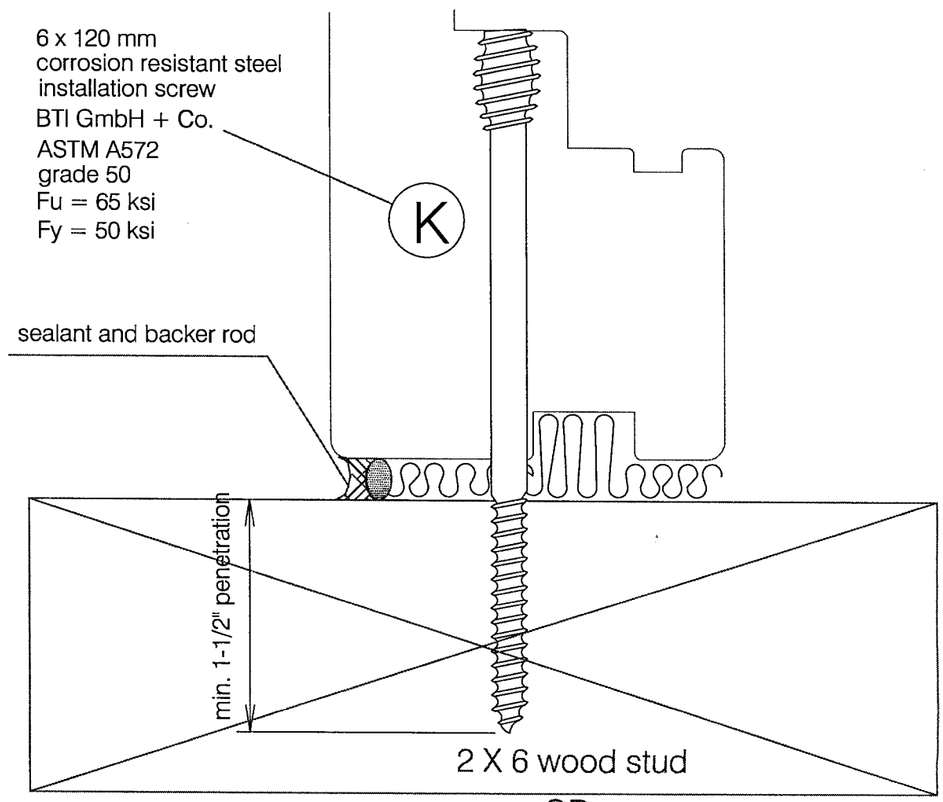

OR

Min.2500 psi Poured Concrete wall
or Concrete masonry wall

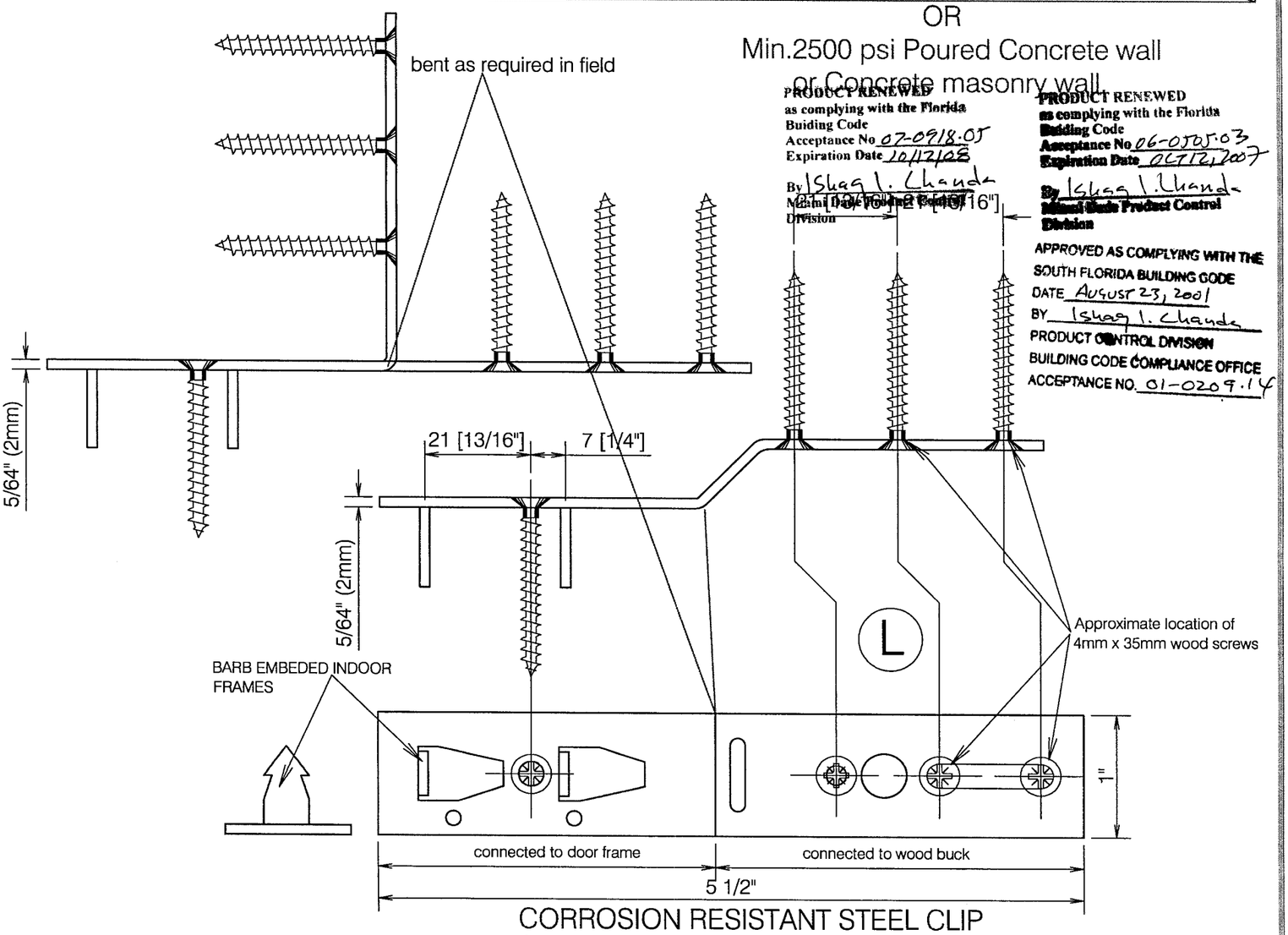

CORROSION RESISTANT STEEL CLIP
(.078" thick, min Fy = 33 KSI).

PRODUCT RENEWED
as complying with the Florida
Building Code
Acceptance No. 07-0918.05
Expiration Date 10/12/08
By Ishaq I. Chanda
Miami-Dade Product Control
Division

PRODUCT RENEWED
as complying with the Florida
Building Code
Acceptance No. 06-0505.03
Expiration Date OCT 12, 2007
By Ishaq I. Chanda
Miami-Dade Product Control
Division

APPROVED AS COMPLYING WITH THE
SOUTH FLORIDA BUILDING CODE
DATE August 23, 2001
BY Ishaq I. Chanda
PRODUCT CONTROL DIVISION
BUILDING CODE COMPLIANCE OFFICE
ACCEPTANCE NO. 01-0209.14

FAVORIT - 311E Entry Resistant by SIEGENIA

Single handle operated tilt and turn fitting with variable handle position, drillable, barrel stay support and corner support (34mm - 1 5/16" diameter), E-characteristics: deadbolt projection, mushroom cam locking, protection against drilling, SIEGENIA EUROLINE DZ handle (locking with press cylinder).

LOCATION	LOCKING CAM	STRIKER	No. OF SCREWS	SHEET No.
A	STEEL MUSHROOM	PART # A0800	4	17
L	STEEL CLIP		4	18
K	INSTALLATION SCREW		N/A	18
G	BAKA C 1-20WF DOOR HINGE		N/A	18
J	STEEL MUSHROOM	PART # A0767	3	17

PRODUCT RENEWED
as complying with the Florida Building Code
Acceptance No. 07-0918.05
Expiration Date 10/12/08
By Ishaq I. Chanda
Miami Dade Product Control Division

PRODUCT RENEWED
as complying with the Florida Building Code
Acceptance No. 06-0505.03
Expiration Date OCT 12, 2007
By Ishaq I. Chanda
Miami Dade Product Control Division

APPROVED AS COMPLYING WITH THE SOUTH FLORIDA BUILDING CODE
DATE AUGUST 23, 2001
BY Ishaq I. Chanda
PRODUCT CONTROL DIVISION
BUILDING CODE COMPLIANCE OFFICE
ACCEPTANCE NO. 01-0209.14

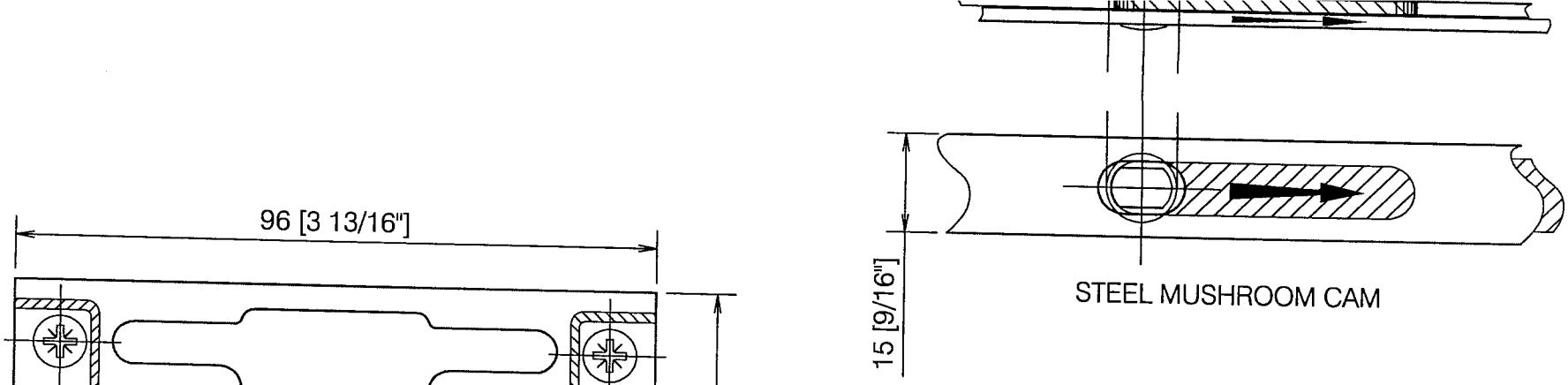

STEEL MUSHROOM CAM

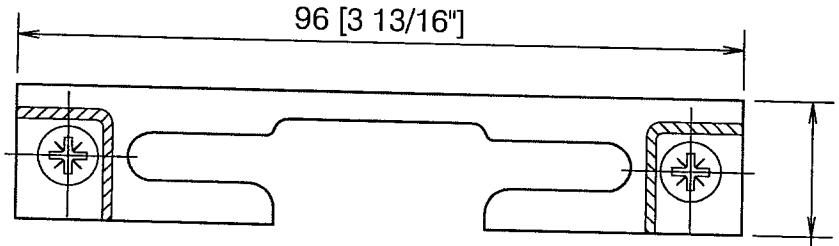

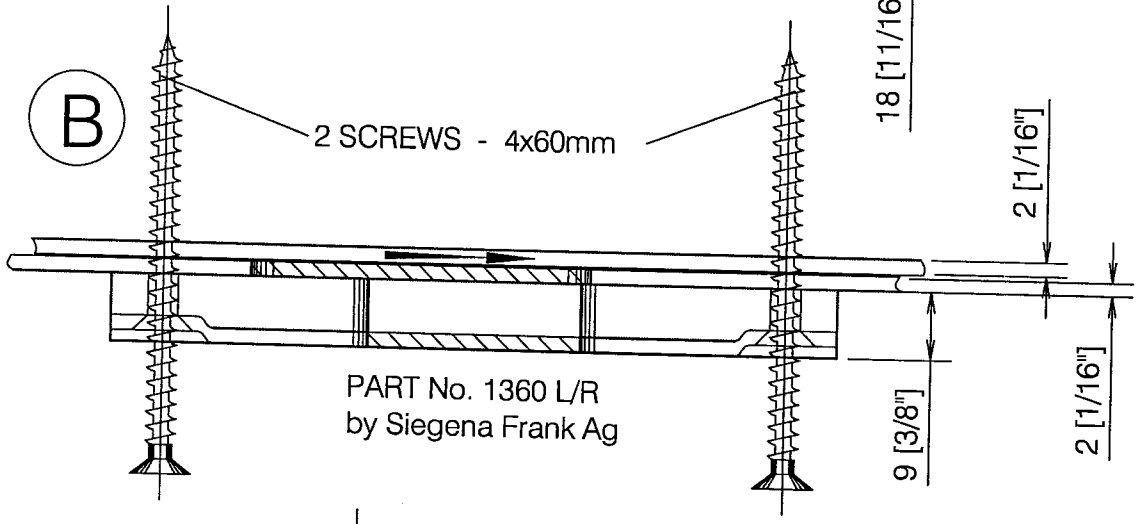

PART No. 1360 L/R
by Siegena Frank Ag

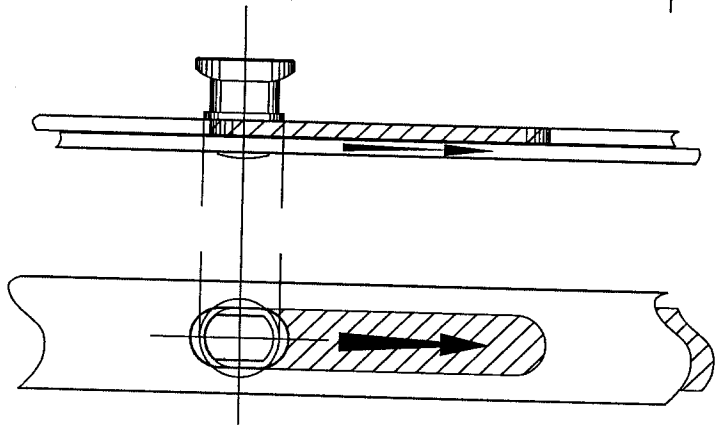

STEEL MUSHROOM CAM

PRODUCT RENEWED
as complying with the Florida
Building Code
Acceptance No 07-0918.05
Expiration Date 10/12/08
By Ishaq I. Chanda
Miami Dade Product Control
Division

PRODUCT RENEWED
as complying with the Florida
Building Code
Acceptance No 06-0505.03
Expiration Date OCT 12, 2007
By Ishaq I. Chanda
Miami Dade Product Control
Division

APPROVED AS COMPLYING WITH THE
SOUTH FLORIDA BUILDING CODE
DATE AUGUST 23, 2001
BY Ishaq I. Chanda
PRODUCT CONTROL DIVISION
BUILDING CODE COMPLIANCE OFFICE
ACCEPTANCE NO. 01-0209.14

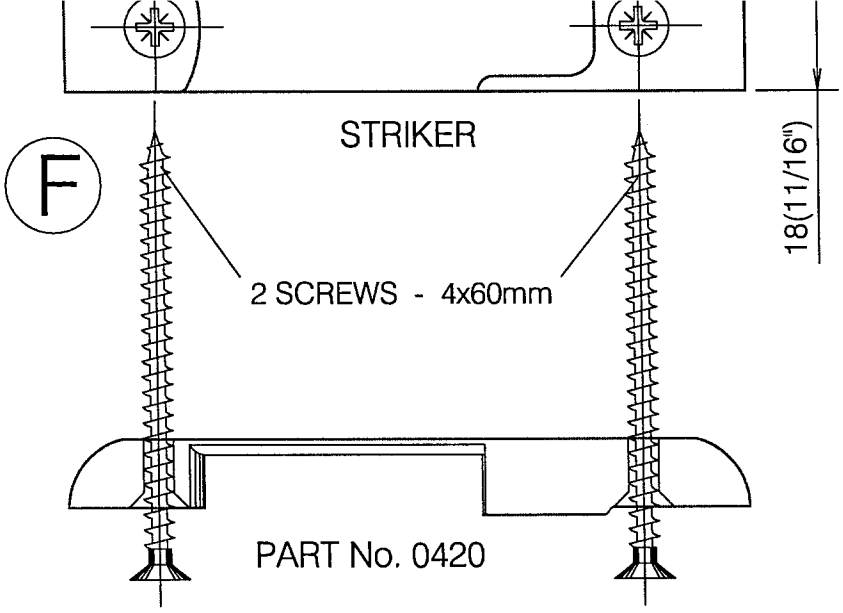

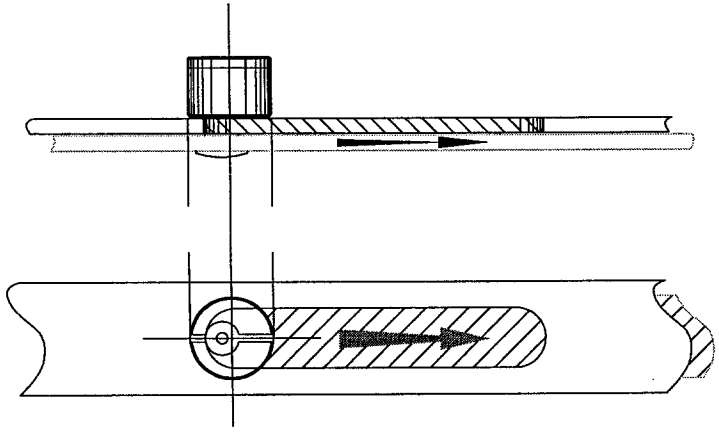

LOCKING CAM

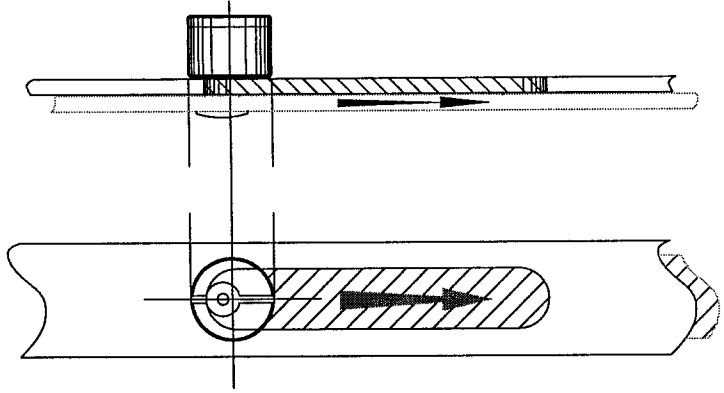

LOCKING CAM

PRODUCT RENEWED
as complying with the Florida Building Code
Acceptance No 07-0918.05
Expiration Date 10/12/08
By Ishaq I. Chanda
Miami Dade Product Control Division

PRODUCT RENEWED
as complying with the Florida Building Code
Acceptance No 06-0505.03
Expiration Date OCT/12/2007
By Ishaq I. Chanda
Miami Dade Product Control Division

APPROVED AS COMPLYING WITH THE SOUTH FLORIDA BUILDING CODE
DATE AUGUST 23, 2001
BY Ishaq I. Chanda
PRODUCT CONTROL DIVISION
BUILDING CODE COMPLIANCE OFFICE
ACCEPTANCE NO. 01-0209.14

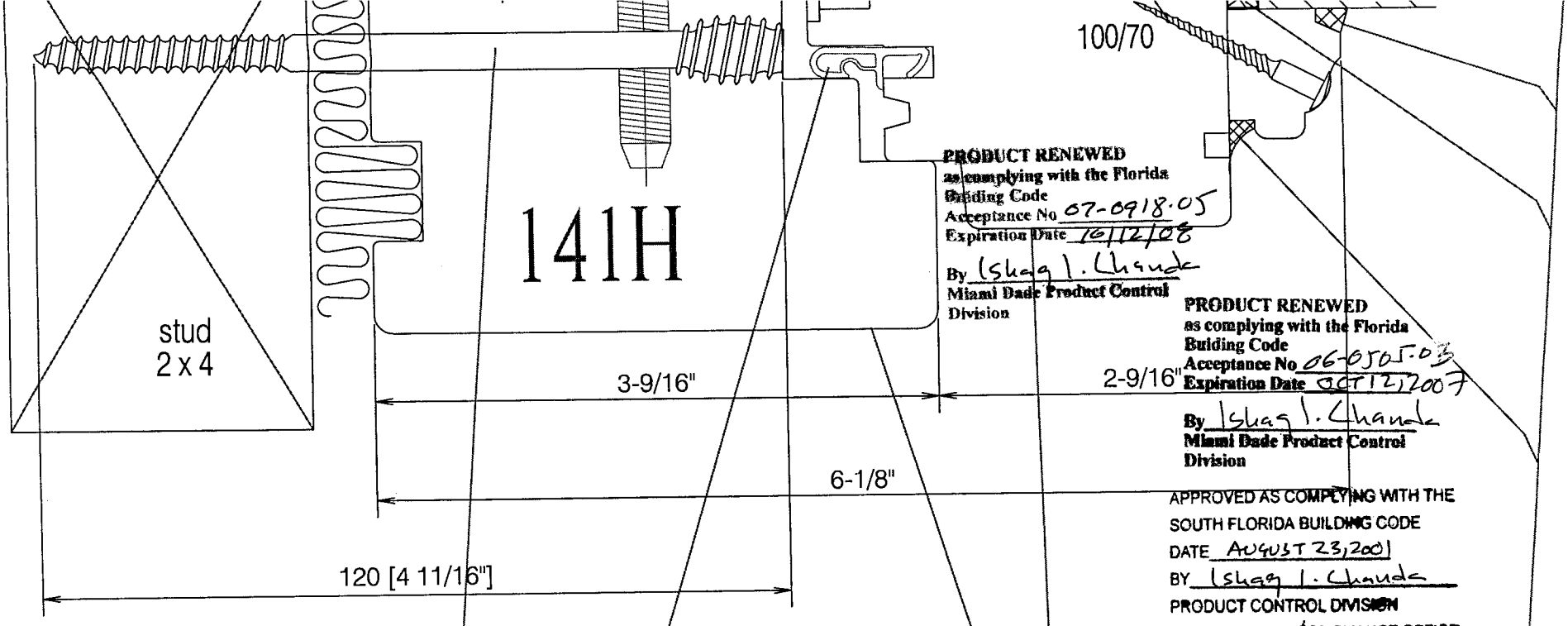

PRODUCT RENEWED
as complying with the Florida
Building Code
Acceptance No 07-0918.05
Expiration Date 10/12/08
By Ishaq I. Chanda
Miami Dade Product Control
Division

PRODUCT RENEWED
as complying with the Florida
Building Code
Acceptance No 06-0505.03
Expiration Date OCT 12, 2007
By Ishaq I. Chanda
Miami Dade Product Control
Division

APPROVED AS COMPLYING WITH THE
SOUTH FLORIDA BUILDING CODE
DATE AUGUST 23, 2001
BY Ishaq I. Chanda
PRODUCT CONTROL DIVISION
BUILDING CODE COMPLIANCE OFFICE
ACCEPTANCE NO. 01-0209.14

1/4" x 4 3/4"
6 x 120 mm
corrosiont resistant steel
installation screws
(see sheet 18)
PART K

push-in, dense
thermoplastic
weatherstrip with
mitered and fused
corners by Deventer GmbH.

Durasil W15 one part
compatible silicone

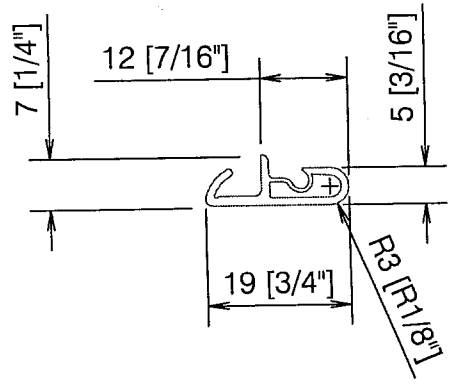

paint and stain by Glasurit -BASF
paint = 3 coats
first: dip with Glassomax
window primer(BG61-001611074)white
second: first finish Glassohyd venti
lacquer(BW59-02000101)
third: final finish Glassomax venti
special(BD60-00150102)

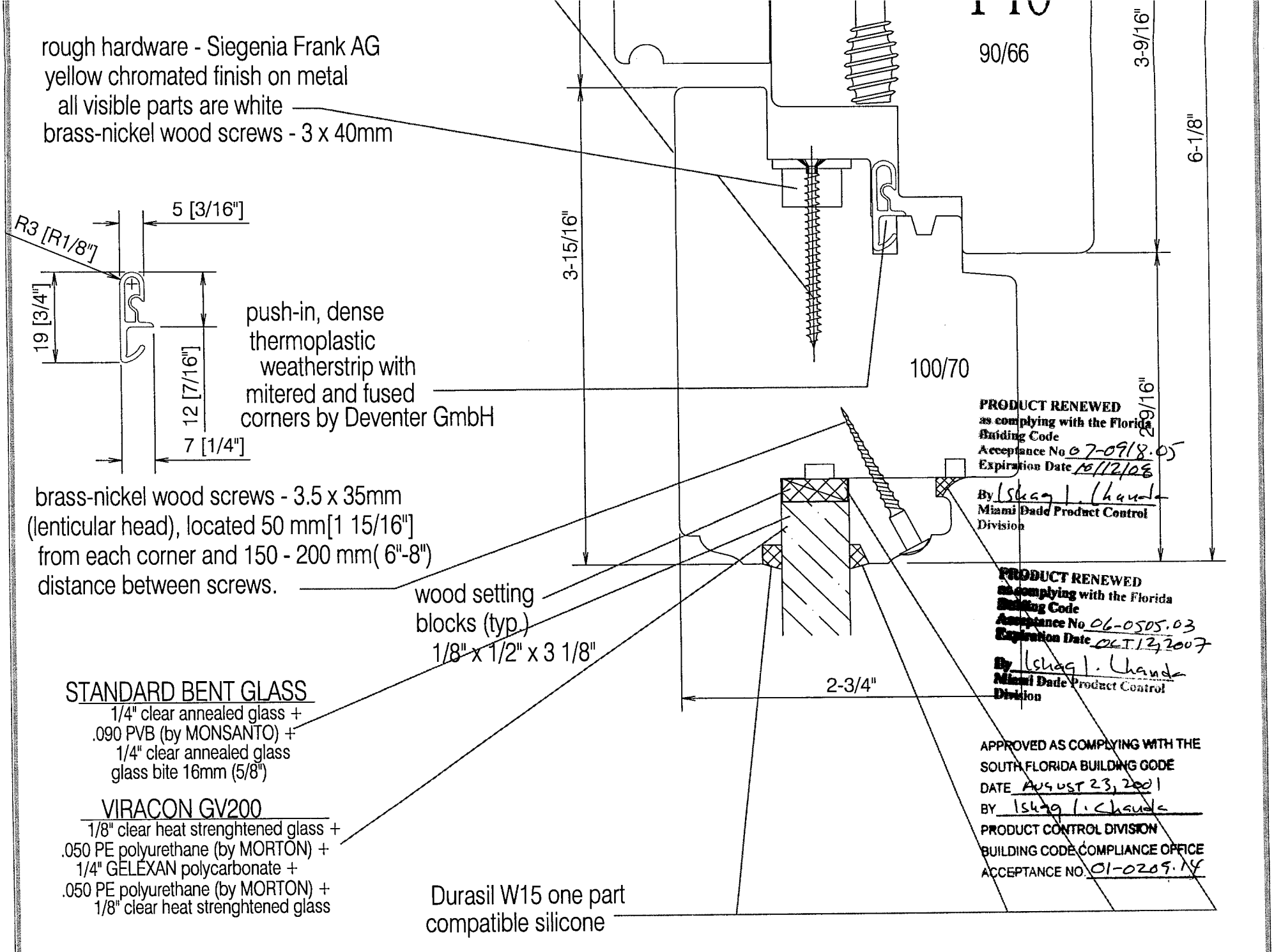
rough hardware - Siegenia Frank AG
yellow chromated finish on metal
all visible parts are white
brass-nickel wood screws - 3 x 40mm
5 [3/16"]
R3 [R1/8"]
19 [3/4"]
12 [7/16"]
7 [1/4"]
push-in, dense thermoplastic weatherstrip with mitered and fused corners by Deventer GmbH
brass-nickel wood screws - 3.5 x 35mm (lenticular head), located 50 mm[1 15/16"] from each corner and 150 - 200 mm(6"-8") distance between screws.
wood setting blocks (typ.) 1/8" x 1/2" x 3 1/8"
STANDARD BENT GLASS
1/4" clear annealed glass +
.090 PVB (by MONSANTO) +
1/4" clear annealed glass
glass bite 16mm (5/8")
VIRACON GV200
1/8" clear heat strenghtened glass +
.050 PE polyurethane (by MORTON) +
1/4" GELEXAN polycarbonate +
.050 PE polyurethane (by MORTON) +
1/8" clear heat strenghtened glass
Durasil W15 one part compatible silicone
90/66
100/70
3-15/16"
3-9/16"
6-1/8"
2-9/16"
2-3/4"
PRODUCT RENEWED
as complying with the Florida Building Code
Acceptance No 07-0918.05
Expiration Date 05/12/08
By Ishaq I. Chanda
Miami Dade Product Control Division
PRODUCT RENEWED
as complying with the Florida Building Code
Acceptance No 06-0505.03
Expiration Date OCT 12 2007
By Ishaq I. Chanda
Miami Dade Product Control Division
APPROVED AS COMPLYING WITH THE SOUTH FLORIDA BUILDING CODE
DATE AUGUST 23, 2001
BY Ishaq I. Chanda
PRODUCT CONTROL DIVISION
BUILDING CODE COMPLIANCE OFFICE
ACCEPTANCE NO. 01-0209.14

first: dip with Glassomax
window primer(BG61-001611074)white
second: first finish Glassohyd venti
lacquer(BW59-02000101)
third: final finish Glassomax venti
special(BD60-00150102)

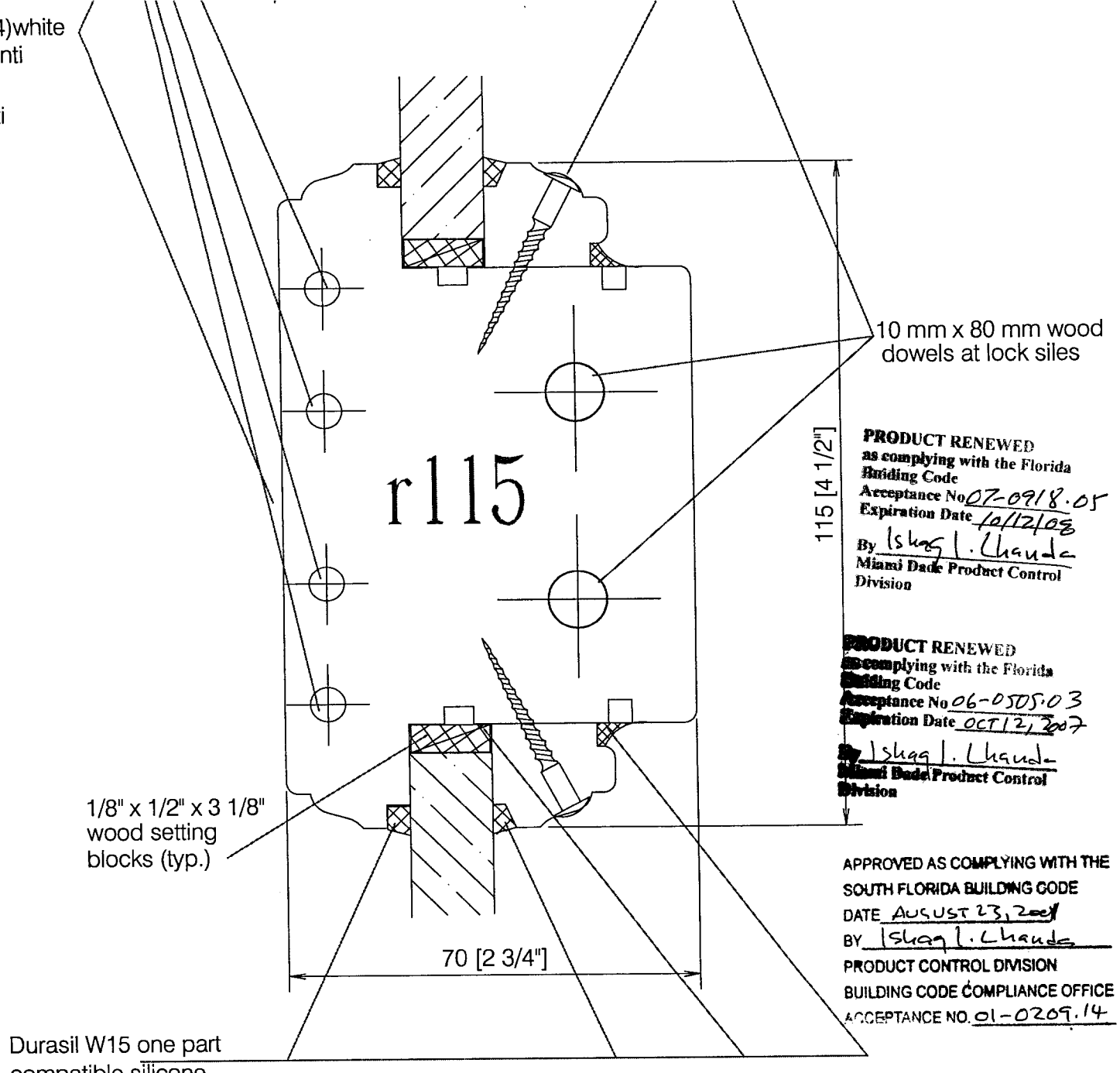

PRODUCT RENEWED
as complying with the Florida Building Code
Acceptance No 07-0918.05
Expiration Date 10/12/08
By Ishaq I. Chanda
Miami Dade Product Control Division

PRODUCT RENEWED
as complying with the Florida Building Code
Acceptance No 06-0505.03
Expiration Date OCT 12, 2007
By Ishaq I. Chanda
Miami Dade Product Control Division

APPROVED AS COMPLYING WITH THE SOUTH FLORIDA BUILDING CODE
DATE AUGUST 23, 2004
BY Ishaq I. Chanda
PRODUCT CONTROL DIVISION
BUILDING CODE COMPLIANCE OFFICE
ACCEPTANCE NO. 01-0209.14

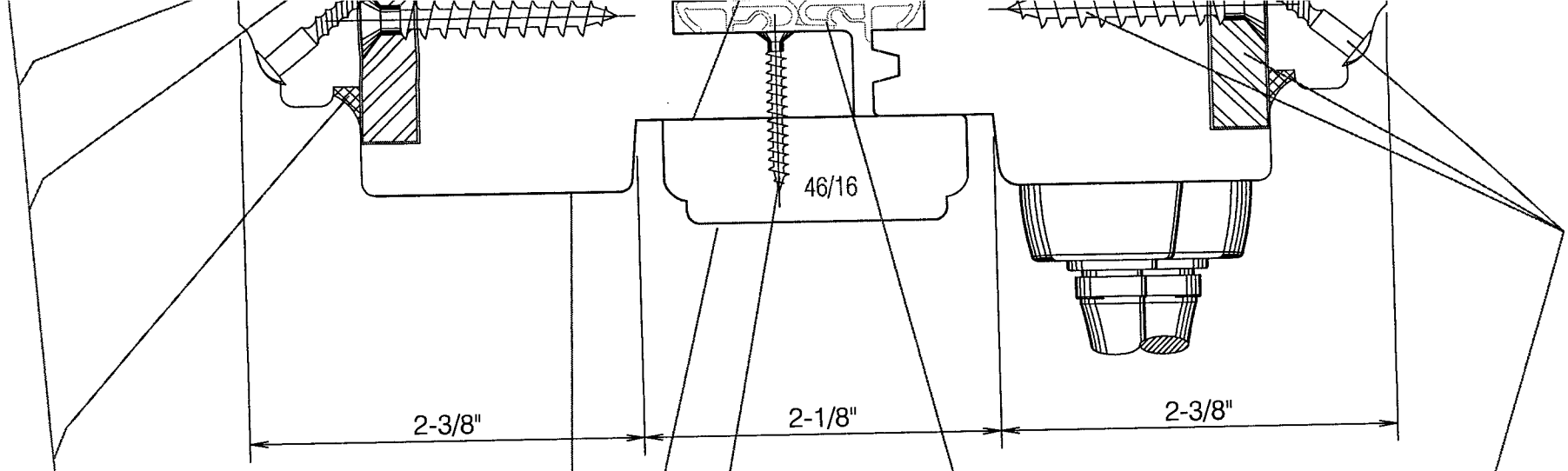

8 mm x 40 mm[5/16" x 1 9/16"] steel
ASTM A36 or better thru the all lenght of sash
6 screws [1/4" x 1 1/2"] 19 1/2"oc
glazing screws went thru clear holes

3 x 25mm x 250mm O.C.(10")
wood screws

Durasil W15 one part
compatible silicone

PRODUCT RENEWED
as complying with the Florida
Buiding Code
Acceptance No 07-0918.05
Expiration Date 10/12/08
By Ishaq I. Chanda
Miami Dade Product Control
Division

APPROVED AS COMPLYING WITH THE
SOUTH FLORIDA BUILDING CODE
DATE August 23, 2001
BY Ishaq I. Chanda
PRODUCT CONTROL DIVISION
BUILDING CODE COMPLIANCE OFFICE
ACCEPTANCE NO. 01-0209.14

push-in, dense
thermoplastic
weatherstrip with
mitered and fused
corners by Deventer GmbH

paint and stain by Glasurit -BASF
paint = 3 coats
first: dip with Glassomax
window primer(BG61-001611074)white
second: first finish Glassohyd venti
lacquer(BW59-02000101)
third: final finish Glassomax venti
special(BD60-00150102)

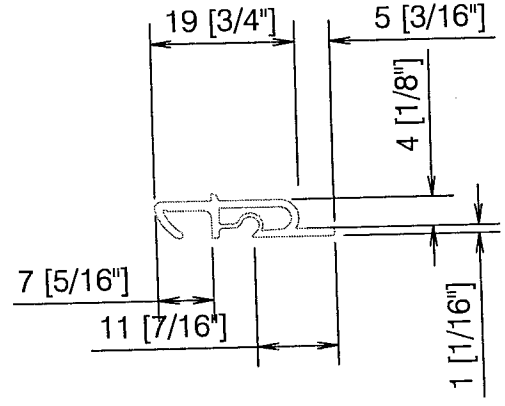

PRODUCT RENEWED
as complying with the Florida
Buiding Code
Acceptance No 06-0505.03
Expiration Date OCT 12, 2007
By Ishaq I. Chanda
Miami Dade Product Control
Division

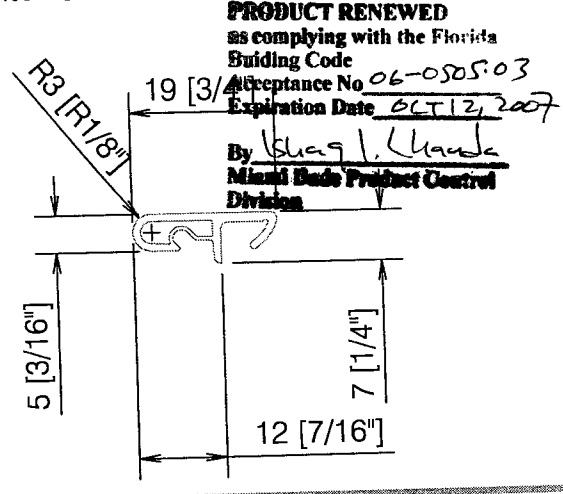

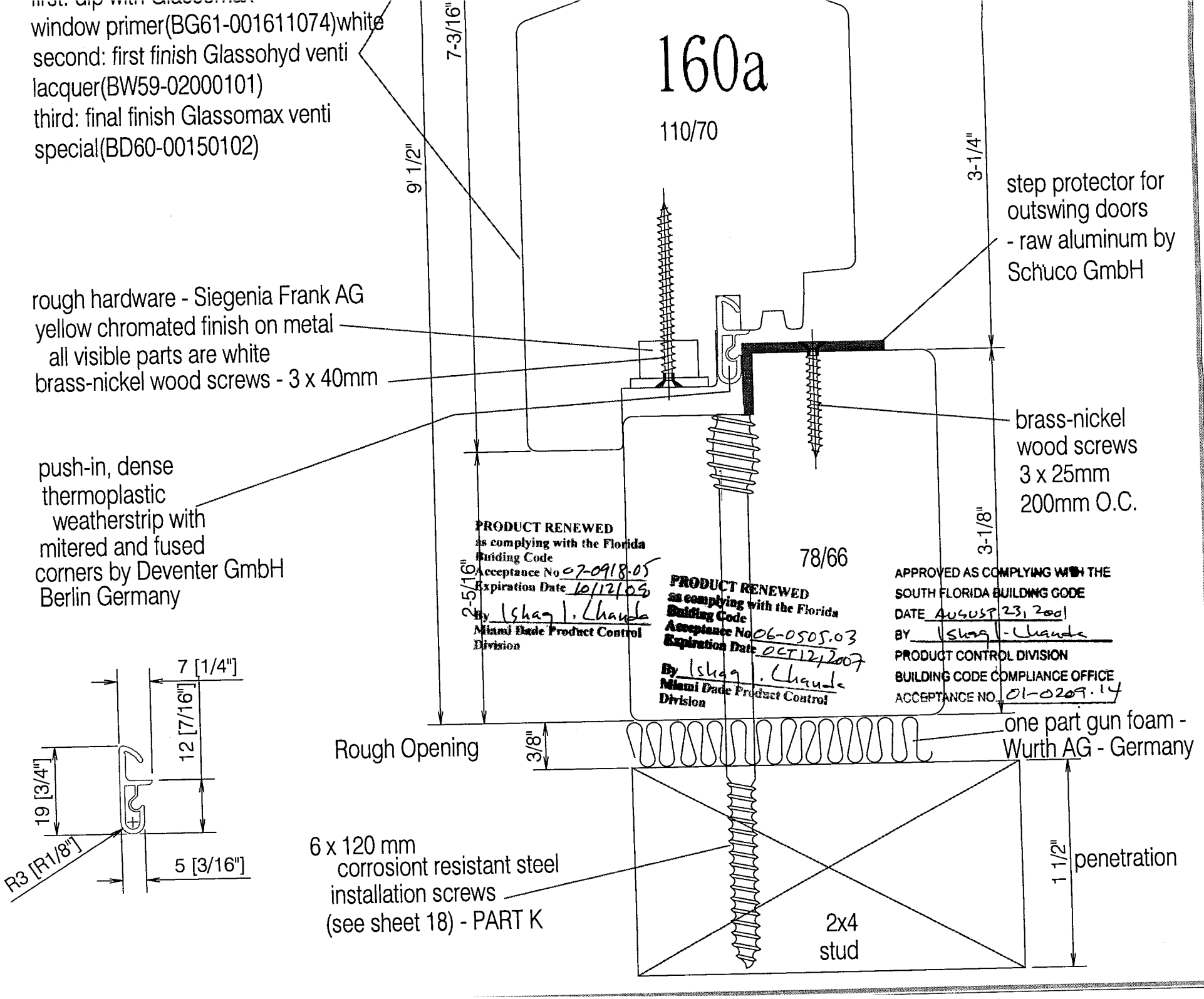
first: dip with Glassomax
window primer(BG61-001611074)white
second: first finish Glassohyd venti
lacquer(BW59-02000101)
third: final finish Glassomax venti
special(BD60-00150102)
160a
110/70
78/66
9' 1/2"
7-3/16"
3-1/4"
3-1/8"
2-5/16"
3/8"
step protector for outswing doors - raw aluminum by Schuco GmbH
rough hardware - Siegenia Frank AG
yellow chromated finish on metal
all visible parts are white
brass-nickel wood screws - 3 x 40mm
push-in, dense thermoplastic weatherstrip with mitered and fused corners by Deventer GmbH Berlin Germany
brass-nickel wood screws 3 x 25mm 200mm O.C.
PRODUCT RENEWED as complying with the Florida Building Code Acceptance No 07-0918.05 Expiration Date 10/12/08 By Ishaq I. Chanda Miami Dade Product Control Division
PRODUCT RENEWED as complying with the Florida Building Code Acceptance No 06-0505.03 Expiration Date OCT 12 2007 By Ishaq I. Chanda Miami Dade Product Control Division
APPROVED AS COMPLYING WITH THE SOUTH FLORIDA BUILDING CODE DATE AUGUST 23, 2001 BY Ishaq I. Chanda PRODUCT CONTROL DIVISION BUILDING CODE COMPLIANCE OFFICE ACCEPTANCE NO. 01-0209.14
Rough Opening
one part gun foam - Wurth AG - Germany
6 x 120 mm corrosiont resistant steel installation screws (see sheet 18) - PART K
2x4 stud
1 1/2" penetration
7 [1/4"]
12 [7/16"]
19 [3/4"]
5 [3/16"]
R3 [R1/8"]

window primer(BG61-00161074)white
second: first finish Glassohyd venti
lacquer(BW59-02000101)
third: final finish Glassomax venti
special(BD60-00150102)

160a

110/70

9 1/2"

7-3/16"

3-1/4"

step protector for
outswing doors
- raw aluminum by
Schuco GmbH

rough hardware - Siegenia Frank AG
yellow chromated finish on metal
all visible parts are white
brass-nickel wood screws - 3 x 40mm

brass-nickel
wood screws
3 x 25mm
200mm (8") O.C.

push-in, dense
thermoplastic
weatherstrip with
mitered and fused
corners by Deventer GmbH
Berlin Germany.

PRODUCT RENEWED
as complying with the Florida
Building Code
Acceptance No 07-0918.05
Expiration Date 10/12/08
By Ishaq I. Chanda
Miami Dade Product Control
Division

2-5/16"

78/66

PRODUCT RENEWED
as complying with the Florida
Building Code
Acceptance No 06-0505.03
Expiration Date OCT 12, 2007
By Ishaq I. Chanda
Miami Dade Product Control
Division

APPROVED AS COMPLYING WITH THE
SOUTH FLORIDA BUILDING CODE
DATE August 23, 2001
BY Ishaq I. Chanda
PRODUCT CONTROL DIVISION
BUILDING CODE COMPLIANCE OFFICE
ACCEPTANCE NO. 01-0209.14

3-1/16"

Rough Opening

3/8"

one part gun foam -
Wurth AG - Germany

7 [1/4"]

12 [7/16"]

19 [3/4"]

R3 [R1/8"]

5 [3/16"]

6 x 120 mm
corrosiont resistant steel
installation screws
(see sheet 18) - Part K

1 1/2" Penetration

2 x 4
stud

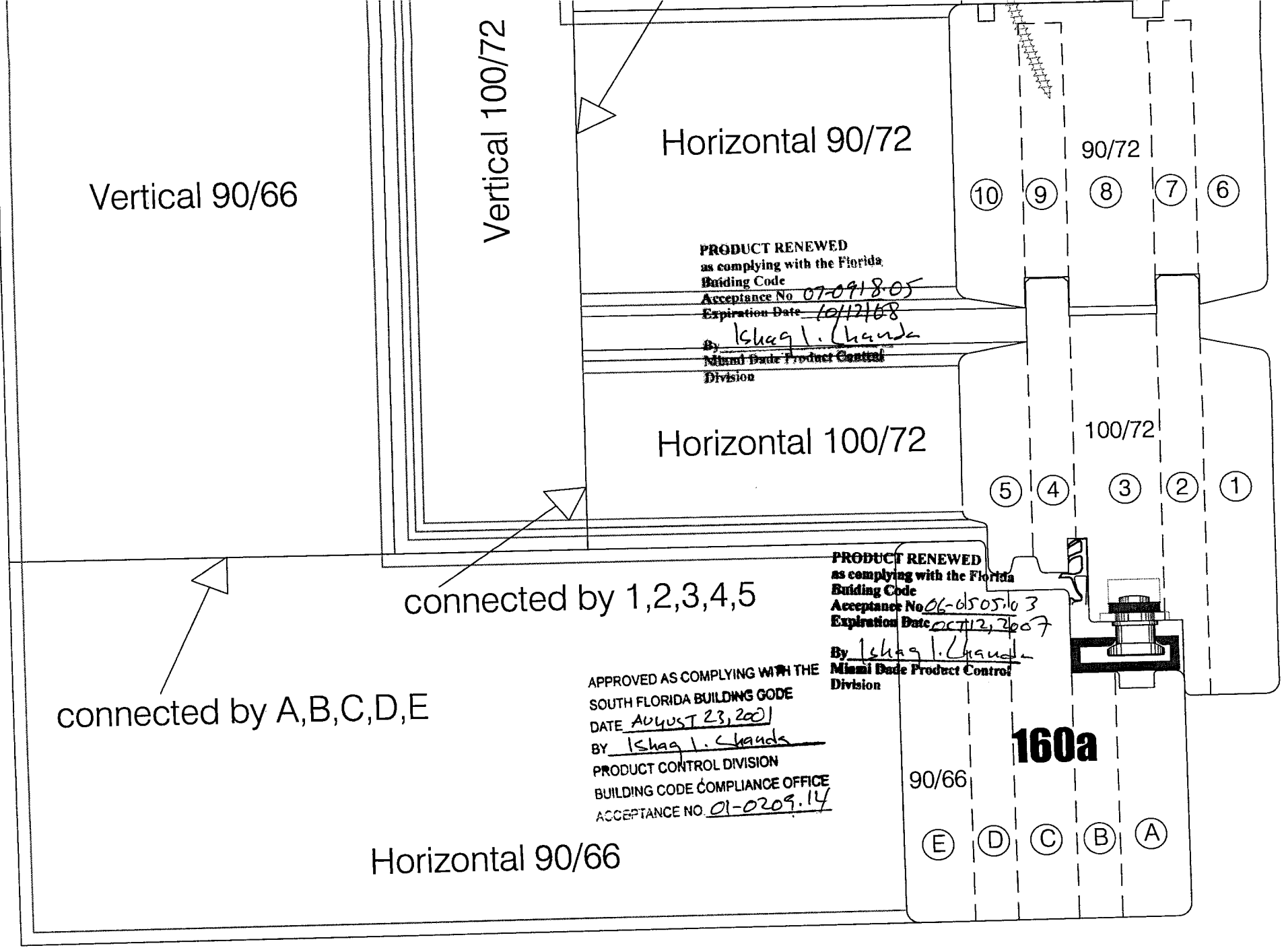

Detail 1 as shown
Detail 1A similar

window primer(BG61-001611074)white
second: first finish Glassohyd venti
lacquer(BW59-02000101)
third: final finish Glassomax venti
special(BD60-00150102)

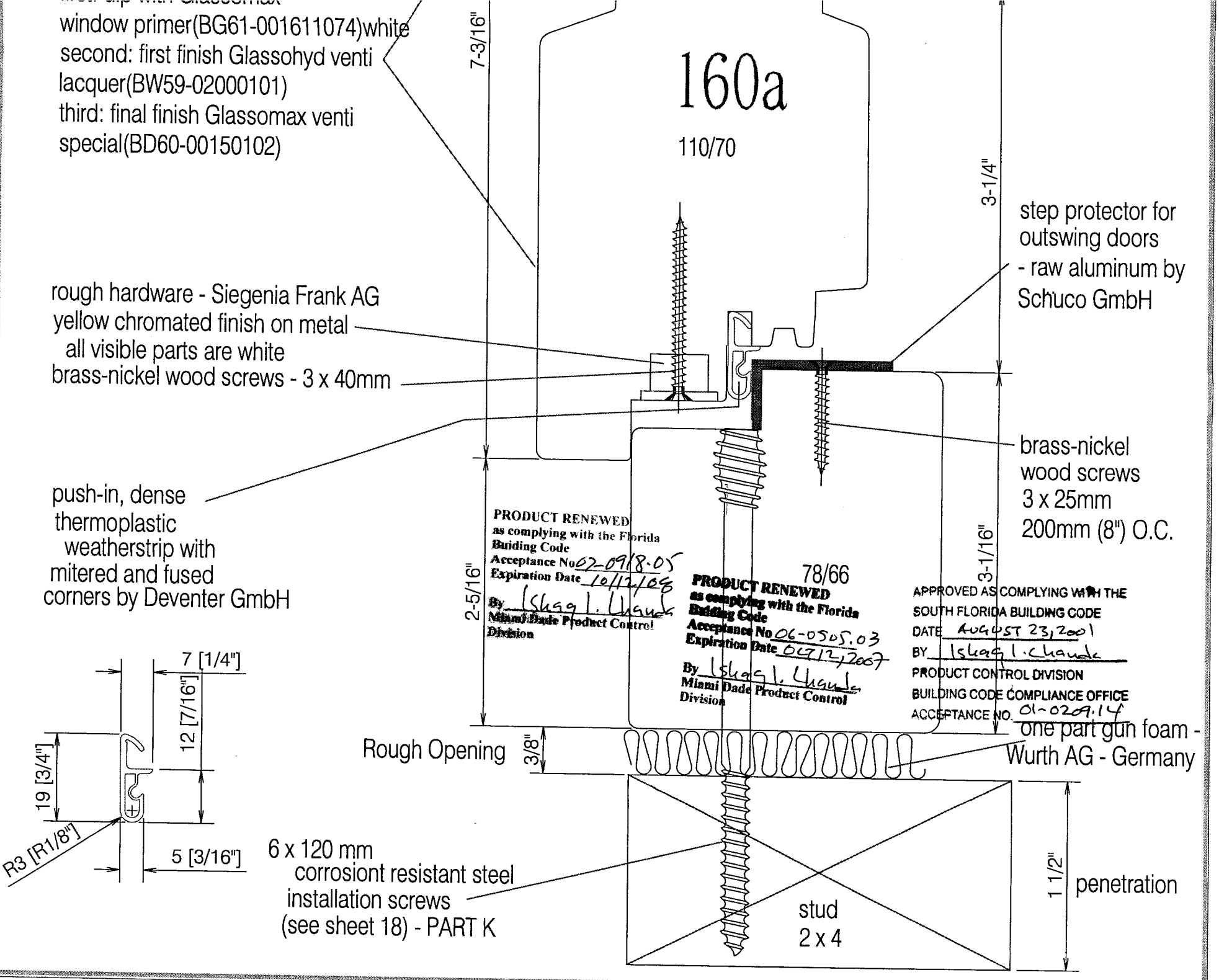

step protector for
outswing doors
- raw aluminum by
Schüco GmbH

rough hardware - Siegenia Frank AG
yellow chromated finish on metal
all visible parts are white
brass-nickel wood screws - 3 x 40mm

brass-nickel
wood screws
3 x 25mm
200mm (8") O.C.

push-in, dense
thermoplastic
weatherstrip with
mitered and fused
corners by Deventer GmbH

one part gun foam -
Wurth AG - Germany

6 x 120 mm
corrosiont resistant steel
installation screws
(see sheet 18) - PART K

penetration

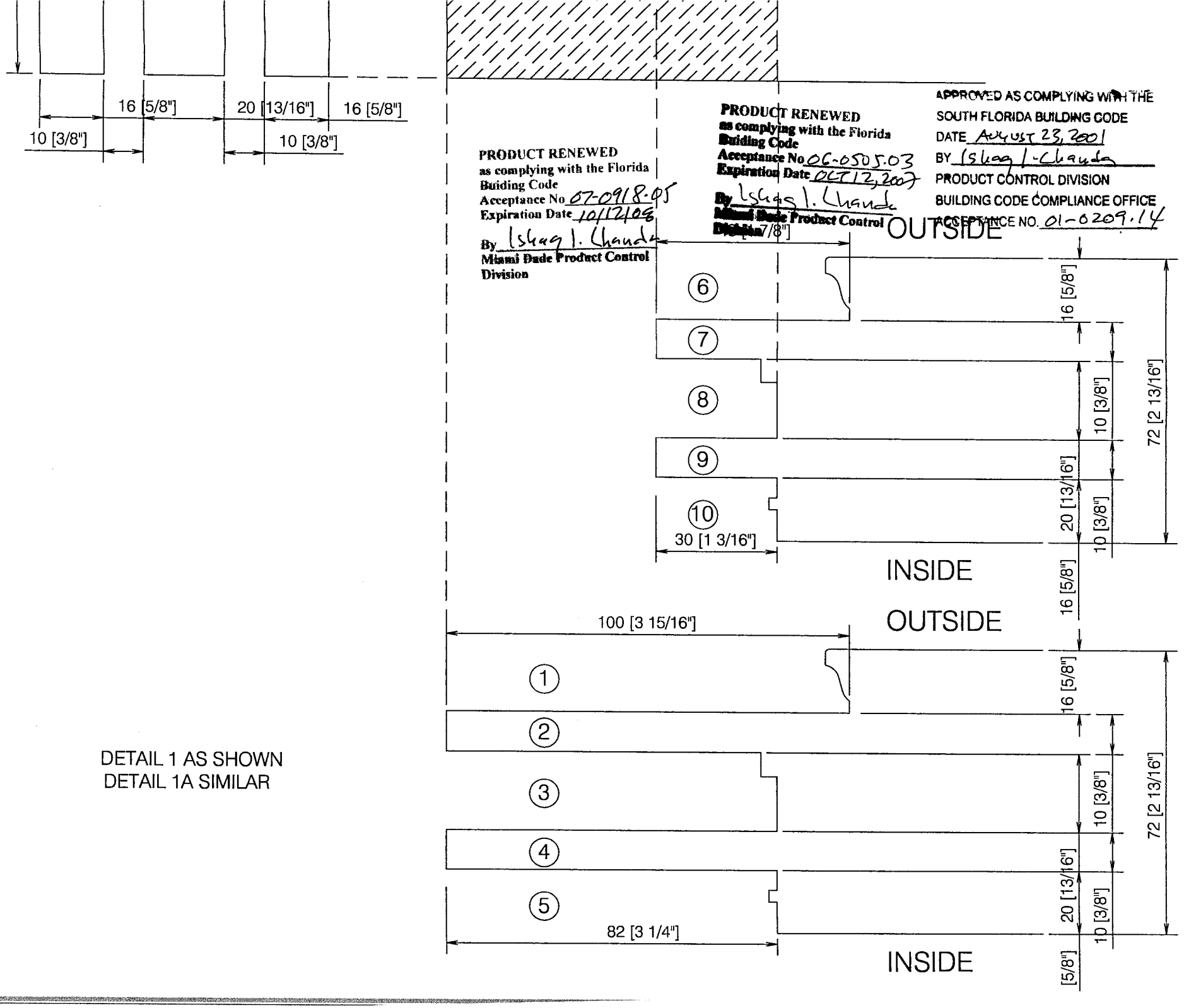

DETAIL 1 AS SHOWN
DETAIL 1A SIMILAR

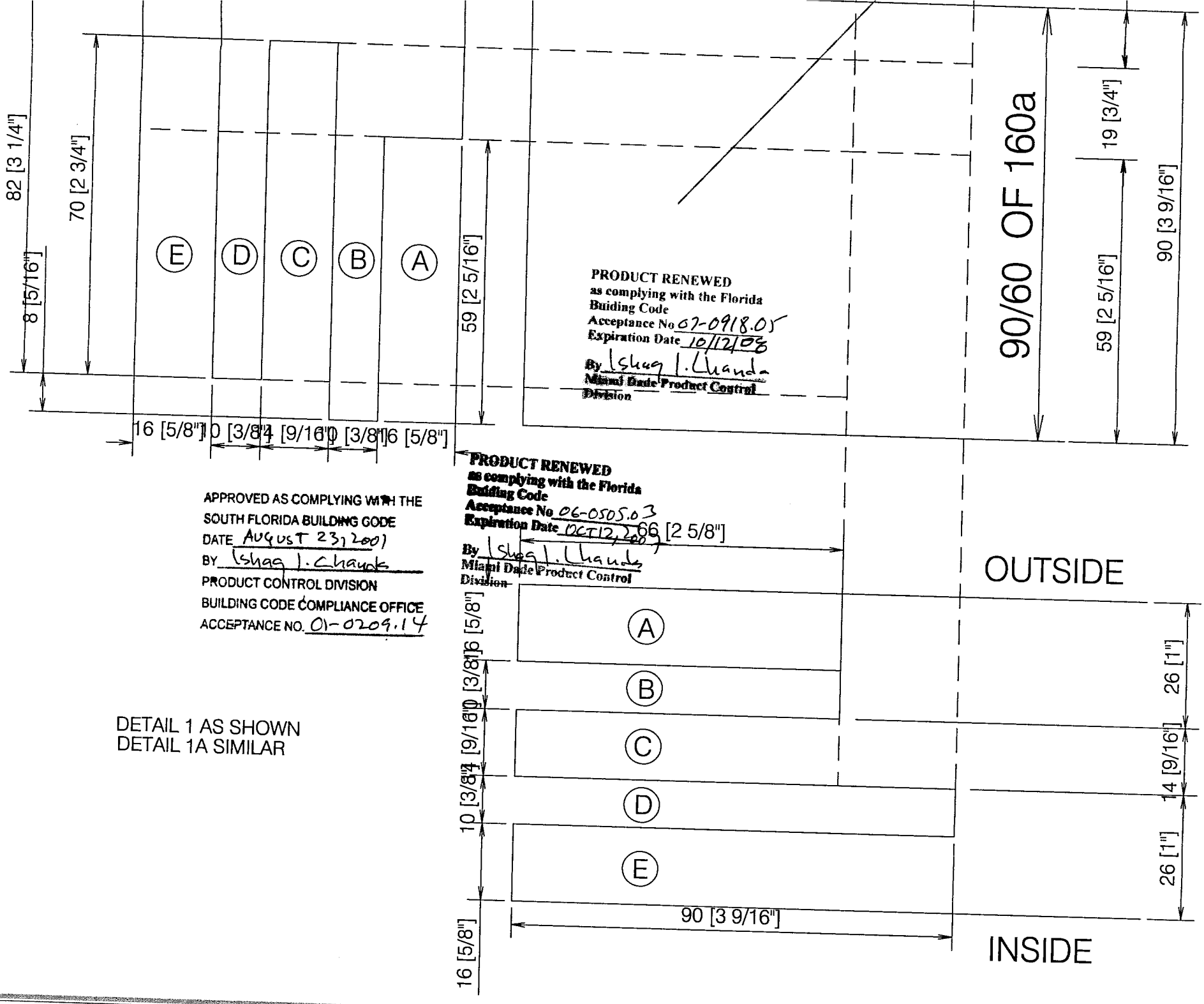

DETAIL 1 AS SHOWN
DETAIL 1A SIMILAR

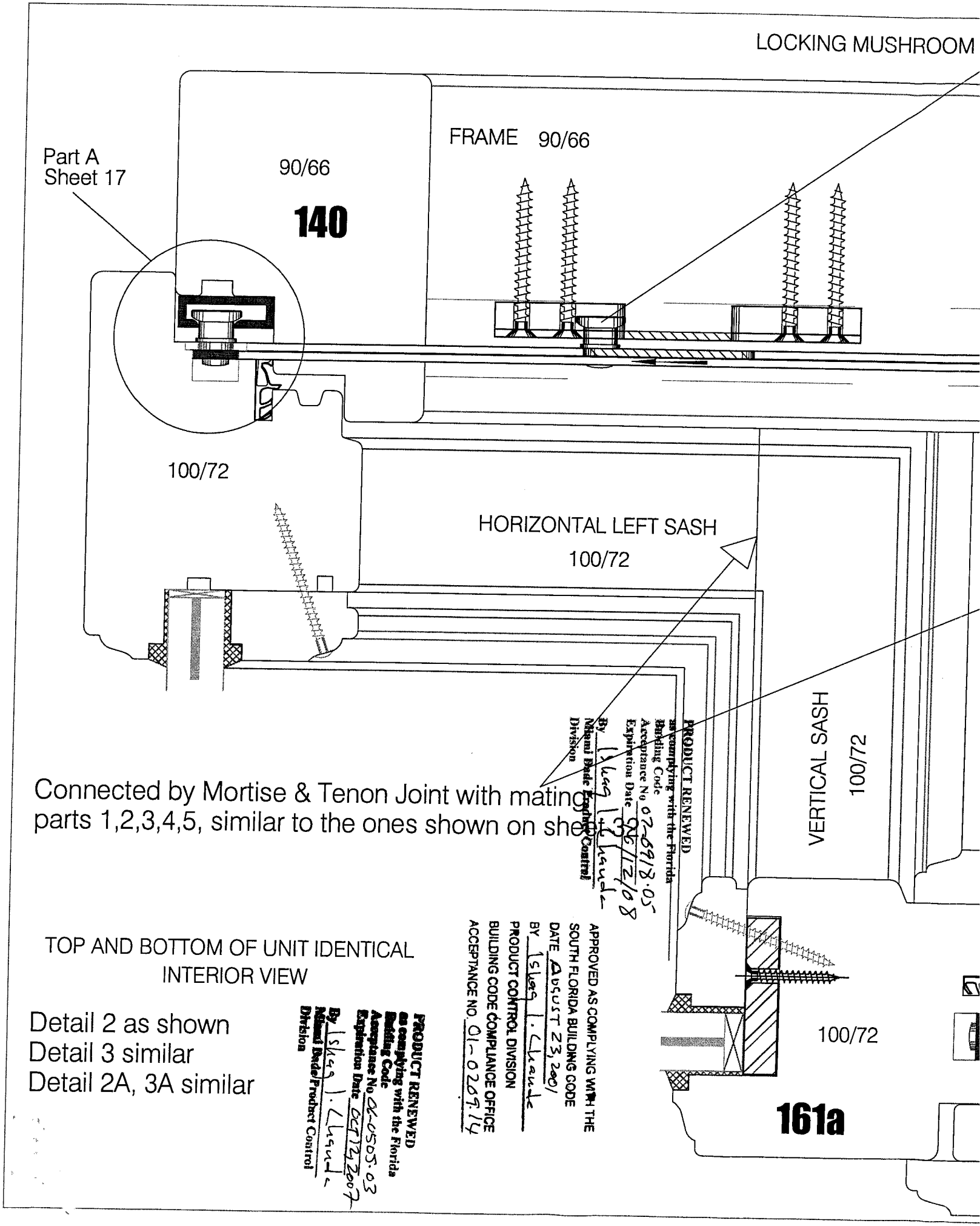

Connected by Mortise & Tenon Joint with mating parts 1,2,3,4,5, similar to the ones shown on sheet 3

TOP AND BOTTOM OF UNIT IDENTICAL
INTERIOR VIEW

Detail 2 as shown
Detail 3 similar
Detail 2A, 3A similar

PRODUCT RENEWED
as complying with the Florida
Building Code
Acceptance No 02-0918.05
Expiration Date 06/12/08
By Ishag I. Chanda
Miami Dade Product Control
Division

APPROVED AS COMPLYING WITH THE
SOUTH FLORIDA BUILDING CODE
DATE AUGUST 23, 2001
BY Ishag I. Chanda
PRODUCT CONTROL DIVISION
BUILDING CODE COMPLIANCE OFFICE
ACCEPTANCE NO. 01-0209.14

PRODUCT RENEWED
as complying with the Florida
Building Code
Acceptance No 06-0505.03
Expiration Date OCT 12, 2007
By Ishag I. Chanda
Miami Dade Product Control
Division