MIAMI-DADE COUNTY

BUILDING CODE COMPLIANCE OFFICE (BCCO)
PRODUCT CONTROL DIVISION

MIAMI-DADE COUNTY, FLORIDA
METRO-DADE FLAGLER BUILDING
140 WEST FLAGLER STREET, SUITE 1603
MIAMI, FLORIDA 33130-1563
(305) 375-2901 FAX (305) 372- 6339
www.miamidade.gov/buildingcode

NOTICE OF ACCEPTANCE (NOA)

Construction Glass Industries
10100 N. W. 25 Street
Miami, Fl. 33172

SCOPE:

This NOA is being issued under the applicable rules and regulations governing the use of construction materials. The documentation submitted has been reviewed by Miami-Dade County Product Control Division and accepted by the Board of Rules and Appeals (BORA) to be used in Miami Dade County and other areas where allowed by the Authority Having Jurisdiction (AHJ).

This NOA shall not be valid after the expiration date stated below. The Miami-Dade County Product Control Division (In Miami Dade County) and/or the AHJ (in areas other than Miami Dade County) reserve the right to have this product or material tested for quality assurance purposes. If this product or material fails to perform in the accepted manner, the manufacturer will incur the expense of such testing and the AHJ may immediately revoke, modify, or suspend the use of such product or material within their jurisdiction. BORA reserves the right to revoke this acceptance, if it is determined by Miami-Dade County Product Control Division that this product or material fails to meet the requirements of the applicable building code.

This product is approved as described herein, and has been designed to comply with the Florida Building Code, including the High Velocity Hurricane Zone.

DESCRIPTION: Series "238" Aluminum Casement Window – L.M.I.

APPROVAL DOCUMENT: Drawing No. **W98-100,** titled "Series-238 Aluminum Casement Window, sheets 1 through 6 of 6, prepared by Al-Farooq Corporation, dated 12/04/1998 and last revised on 09/07/2006, signed and sealed by Dr. Humayoun Farooq, P. E., bearing the Miami-Dade County Product Control Renewal stamp with the Notice of Acceptance number and expiration date by the Miami-Dade County Product Control Division.

MISSILE IMPACT RATING: Large and Small Missile Impact Resistant

LABELING: Each unit shall bear a permanent label with the manufacturer's name or logo, city, state and following statement: "Miami-Dade County Product Control Approved", unless otherwise noted herein.

REVISION of this NOA shall be considered after a renewal application has been filed and there has been no change in the applicable building code negatively affecting the performance of this product.

TERMINATION of this NOA will occur after the expiration date or if there has been a revision or change in the materials, use, and/or manufacture of the product or process. Misuse of this NOA as an endorsement of any product, for sales, advertising or any other purposes shall automatically terminate this NOA. Failure to comply with any section of this NOA shall be cause for termination and removal of NOA.

ADVERTISEMENT: The NOA number preceded by the words Miami-Dade County, Florida, and followed by the expiration date may be displayed in advertising literature. If any portion of the NOA is displayed, then it shall be done in its entirety.

INSPECTION: A copy of this entire NOA shall be provided to the user by the manufacturer or its distributors and shall be available for inspection at the job site at the request of the Building Official.

This NOA **renews NOA No. 06-0928.04** and consists of this page 1 and evidence pages E-1 and E-2, as well as approval document mentioned above.

The submitted documentation was reviewed by **Jaime D. Gascon, P.E.**

PRODUCT CONTROL ACCEPTED

J. Gascon
10/11/07

NOTICE OF ACCEPTANCE: EVIDENCE SUBMITTED

A. DRAWINGS (transferred from file # 01-1002.03)

1. Manufacturer's parts and sections drawings.
2. Drawing No. **W98-100,** titled "Series-238 Aluminum Casement Window, sheets 1 through 6 of 6, prepared by Al-Farooq Corporation, dated 12/04/98 and last revised on 09-07-2006, signed and sealed by Dr. Humayoun Farooq , P. E..
   Submitted under NOA# 06-0829.04

B. TESTS (transferred from file # **01-1002.03***)* The original test conducted per PA 201, 202, 203-94, now termed as TAS 201, TAS 202 & 203-94:

1) Test report on 1) Large Missile Impact Test, per PA 201-94.
   2) Cyclic Wind Pressure Loading, per PA 203-94

Along with marked-up drawings and installation diagram of an Aluminum Casement Window, prepared by Hurricane Testing Lab, Inc., Test Report No(s). **HTL-0080-0303-96**, dated 03/06/96 for specimen #1, 2, 3 & 4 dated 10/14/94, signed and sealed by Timothy S. Marshall, P.E.

2) Test report on 1) Air Infiltration Test, per ASTM E283.
   2) Uniform Static Air Pressure Test, Loading per ASTM E330.
   3) Water Resistance Test, per ASTM E547/E331.

Along with marked-up drawings and installation diagram of an Aluminum Casement Window, prepared by Fenestration Testing Laboratory, Inc., Test Report No(s). **FTL-1003**, dated 10/14/94 and **FTL-1041** dated 10/14/94, signed and sealed by Yamil Kuri, P.E.

3) Test report on 1) Large Missile Impact Test, per PA 201-94.
   2) Cyclic Wind Pressure Loading, per PA 203-94.

along with installation diagram of a alum. fixed, casement and project-out windows, prepared by Hurricane Test Laboratory, Inc. report No. **HTL-0080-0303-96** dated 03/06/96, signed and sealed by Timothy S. Marshall, P.E.

4) Ref. Test report on 1) Uniform Static Air Pressure Test, Loading per ASTM E330.

along with installation diagram of a Series CGI 238 alum. fixed windows, prepared by Hurricane Test Laboratory, Inc. report No. **HTL-0080-1127-98** dated 11/10/98, signed and sealed by Timothy S. Marshall, P.E.

5) Ref. Test report on 1) Air Infiltration Test, per SFBC PA 202-94
   2) Uniform Static Air Pressure Test, Loading per SFBC PA 202-94.
   3) Water Resistance Test, per SFBC PA 202-94.

along with installation diagram of CGI 238 alum. fixed window, prepared by Hurricane Testing Lab, Inc, report No. **HTL-0080-1107-98** dated Nov. 10, 1998, signed and sealed by Timothy S. Marshall, P.E.

6) Ref. Test report on 1) Large Missile Impact Test, per PA 201-94.
   2) Cyclic Wind Pressure Loading, per PA 203-94.

along with installation diagram of a alum. fixed, casement and project-out windows, prepared by Hurricane Test Laboratory, Inc. report No. **HTL-0080-0303-96** dated 03/06/96, signed and sealed by Timothy S. Marshall, P.E.

Submitted under NOA# 06-0829.04

Jaime D. Gascon, P.E.
Chief, Product Control Division
NOA No 07-0928.02
Expiration Date: October 26, 2008
Approval Date: November 01, 2007

NOTICE OF ACCEPTANCE: EVIDENCE SUBMITTED

C. CALCULATIONS

1. Anchor Verification Calculations, complying w/ FBC-2004, dated 09-07-2006, prepared by Al-Farooq Corp., dated 09/26/01, signed and sealed by Dr. Humayoun Farooq, P.E.
   Submitted under NOA# 06-0829.04
2. Analysis and anchor calculations, prepared by Al-Farooq Corp., dated 09/26/01, signed and sealed by Dr. Humayoun Farooq, P.E. (from file # 01-1002.03)
   Submitted under NOA# 06-0829.04
3. Comparative Analysis and anchor calculations, prepared by Al-Farooq Corp., dated 02/20/99, signed and sealed by Humayoun Farooq, P.E.
   Submitted under NOA# 06-0829.04

D. QUALITY ASSURANCE

1. Miami Dade Building Code Compliance Office (BCCO).

E. MATERIAL CERTIFICATIONS

1. Notice of Acceptance No. **03-0827.08** issued to Solutia, Inc. for "Saflex interlayer", expiring on 03/04/2009.
   Submitted under NOA# 06-0829.04

F. STATEMENTS

1. Statement letter of compliance w/ FBC-2004 dated 09/07/06, signed by Dr. Humayoun Farooq, P.E.
   Submitted under NOA# 06-0829.04
2. Statement letter of compliance and of no financial interest, dated 08/31/06, signed and sealed by Dr. Humayoun Farooq, P.E.
   Submitted under NOA# 06-0829.04
3. Laboratory compliance statements, part of above test reports.
   Submitted under NOA# 06-0829.04

G. OTHERS

1. This NOA renews & revises **NOA # 06-0928.04**, expiring on October 26, 2007.
2. One year conditional approval subjected to verification test.
3. Testing confirmation letter issued by Hurricane Testing Lab dated 09/01/2006.
   Submitted under NOA# 06-0829.04
4. Correspondence between CGI & BCCO dated 03/21/01 & 08/21/2001

Jaime D. Gascon, P.E.
Chief, Product Control Division
NOA No 07-0928.02
Expiration Date: October 26, 2008
Approval Date: November 01, 2007

GENERAL WINDOW SECTIONS

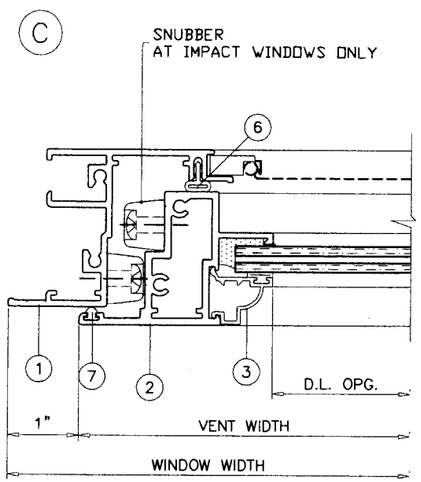

EXTERIOR

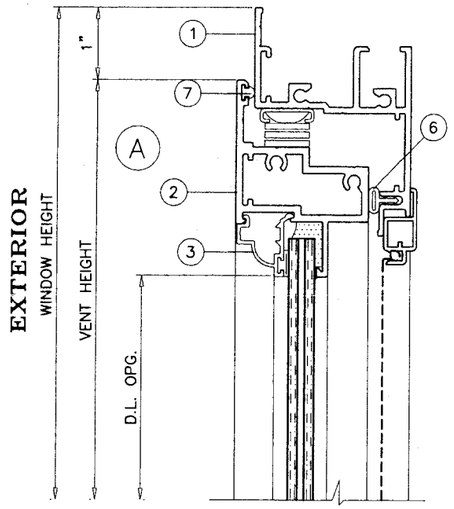

FOR GLASS TYPES, REFER TO SHEETS 3 AND 4.

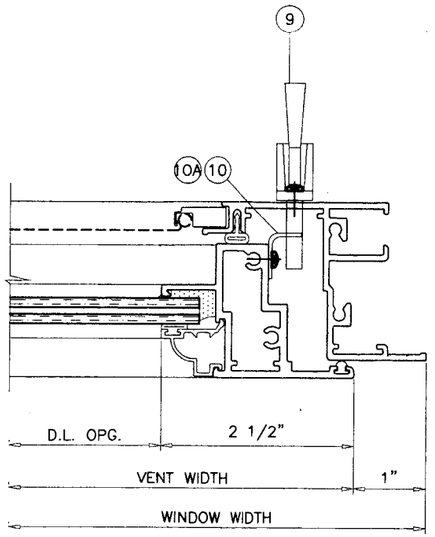

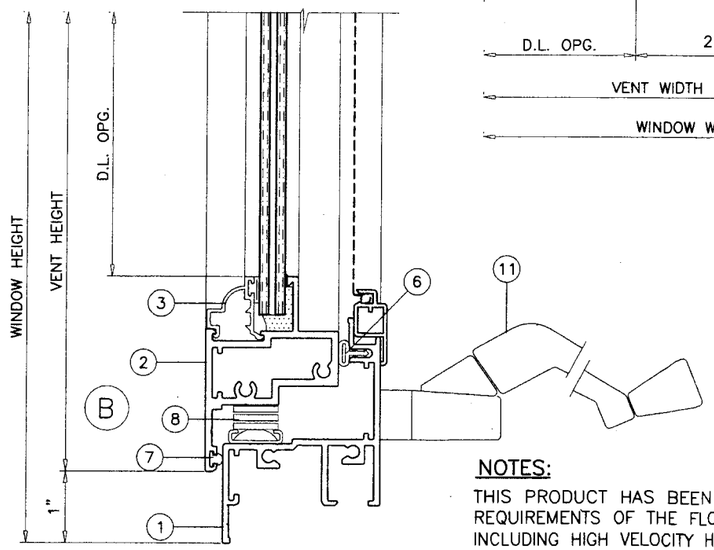

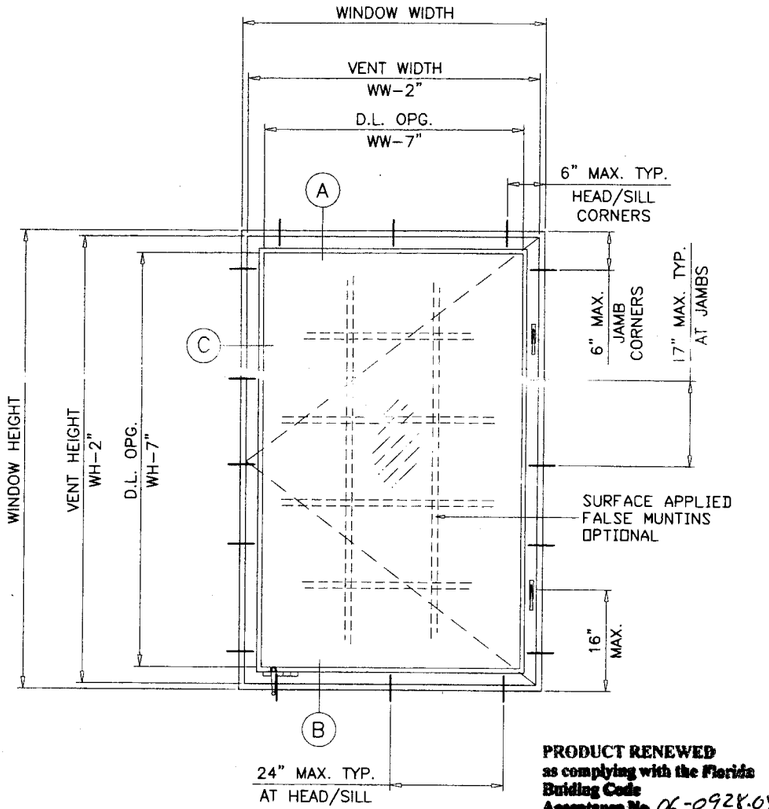

TYPICAL ELEVATION

PRODUCT RENEWED
as complying with the Florida Building Code
Acceptance No 06-0928.04
Expiration Date OCT 26, 2007
By Ishaq I. Llanda
Miami-Dade Product Control Division

FOR MULLION/MULTIPLE UNITS, REFER TO SEPARATE CGI MULLION N.O.A.

THESE WINDOWS ARE RATED FOR LARGE MISSILE IMPACT. SHUTTERS ARE NOT REQUIRED.

INSTRUCTIONS:

USE CHARTS AS FOLLOWS.

STEP 1 DETERMINE DESIGN WIND LOAD REQUIREMENT BASED ON WIND VELOCITY, BLDG. HEIGHT, WIND ZONE USING APPLICABLE ASCE 7 STANDARD.

STEP 2 SEE CHARTS ON SHEETS 3 AND 4 FOR DESIGN LOAD CAPACITY OF DESIRED GLASS SIZE BASED ON APPLICABLE WIND DURATION.

STEP 3 USING CHART ON SHEET 6 SELECT ANCHOR OPTION WITH DESIGN RATING MORE THAN DESIGN LOAD SPECIFIED IN STEP 1 ABOVE.

STEP 4 THE LOWEST VALUE RESULTING FROM STEPS 2 AND 3 SHALL APPLY TO ENTIRE SYSTEM.

NOTES:

THIS PRODUCT HAS BEEN DESIGNED AND TESTED TO COMPLY WITH THE REQUIREMENTS OF THE FLORIDA BUILDING CODE 2004 EDITION (REV. 2005) INCLUDING HIGH VELOCITY HURRICANE ZONE (HVHZ).

WOOD BUCKS BY OTHERS, MUST BE ANCHORED PROPERLY TO TRANSFER LOADS TO THE STRUCTURE.

ANCHORS SHALL BE AS LISTED, SPACED AS SHOWN ON DETAILS, ANCHORS EMBEDMENT TO BASE MATERIAL SHALL BE BEYOND WALL DRESSING OR STUCCO.

ANCHORING OR LOADING CONDITIONS NOT SHOWN IN THESE DETAILS ARE NOT PART OF THIS APPROVAL.

A LOAD DURATION INCREASE IN ALLOWABLE STRESS IS USED IN DESIGN OF ANCHORS INTO WOOD ONLY.

MATERIALS INCLUDING BUT NOT LIMITED TO STEEL/METAL SCREWS, THAT COME INTO CONTACT WITH OTHER DISSIMILAR MATERIALS SHALL MEET THE REQUIREMENTS OF 2004 FLORIDA BLDG. CODE SECTION 2003.8.4 (SUPPLEMENT 2005).

Engr: DR. HUMAYOUN FAROOQ
STRUCTURES
FLA. PE # 16557
C.A.N. 3538

SEP 7 2006

PRODUCT RENEWED
as complying with the Florida Building Code
Acceptance No 07-0928.02
Expiration Date 10/26/2008
By
Miami-Dade Product Control Division

AL-FAROOQ CORPORATION
ENGINEERS, PLANNERS & PRODUCT DESIGN
1235 SW 137 AVE
MIAMI, FLORIDA 33174
TEL. (305) 264-8100 FAX. (305) 262-6978
COMP-ANL\W98-100CGI

SERIES-238 ALUMINUM CASEMENT WINDOW

CONSTRUCTION GLASS IND. CORP.
10100 N.W. 25TH STREET
MIAMI, FL. 33172
TEL. (305) 593-6590 FAX. (305) 593-6592

revisions:

no	date	by	description
A	09.27.01		CHARTS REV. PER ASTM E-1300
B	10.16.01		SHEET 3A REV.
C	09.01.06		UPDATED FOR 2004 FBC

date: 12-04-98
scale: 1/2" = 1"
dr. by: HAMID
chk. by:

drawing no.
W98-100

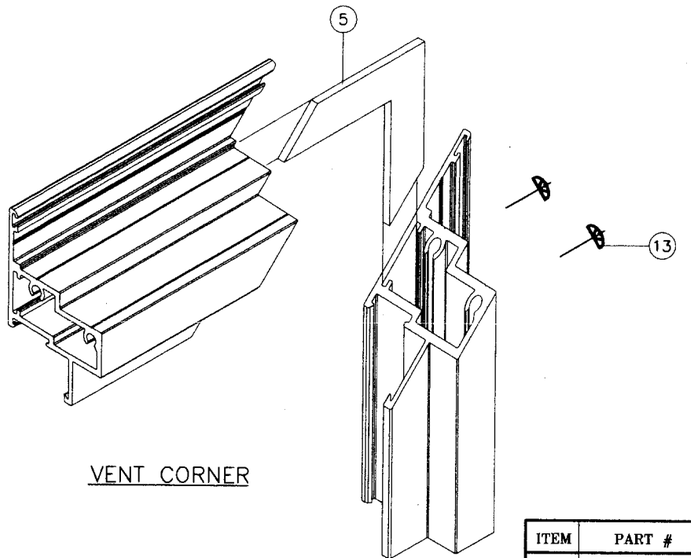

VENT CORNER

ALL FRAME AND VENT CORNERS TO BE SEALED WITH GE SILPRUF OR EQUIV.

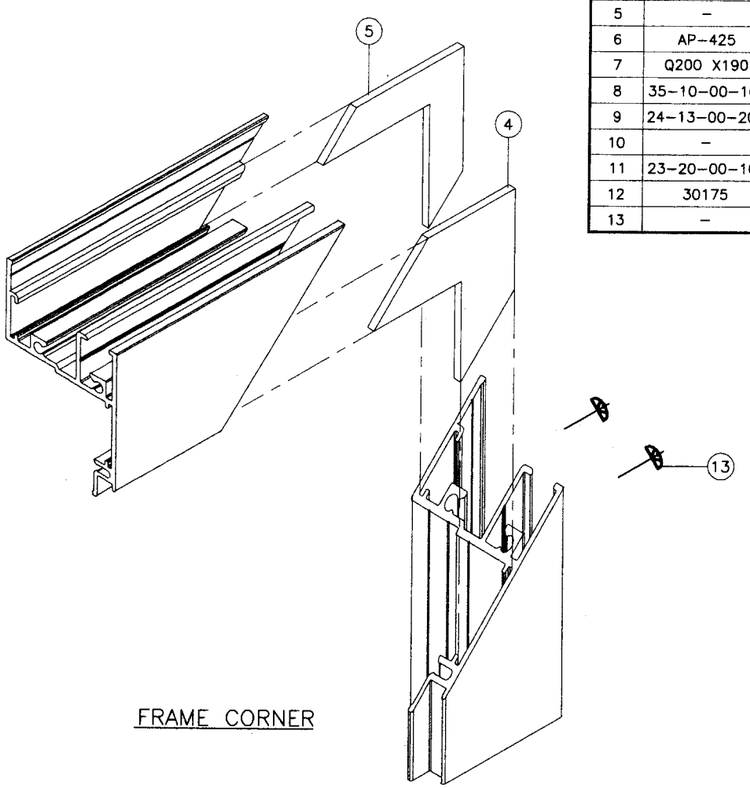

FRAME CORNER

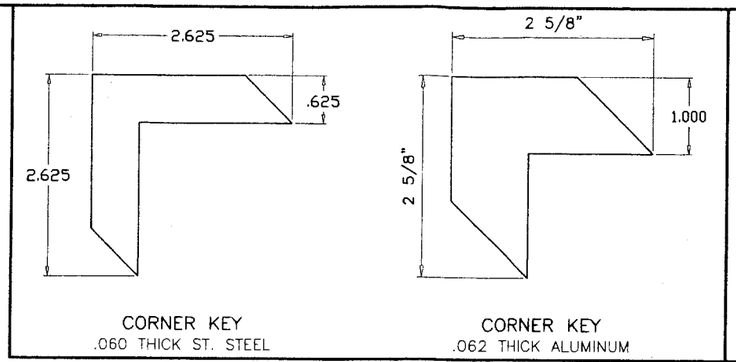

CORNER KEY
.060 THICK ST. STEEL

CORNER KEY
.062 THICK ALUMINUM

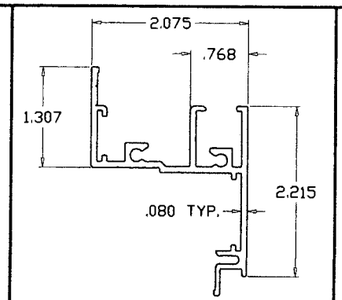

FRAME

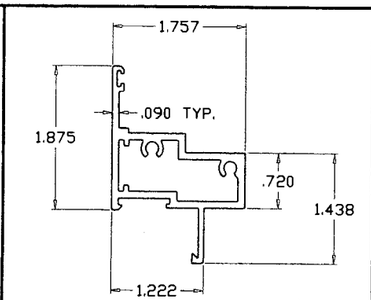

VENT (5/16" LAM. GLASS)

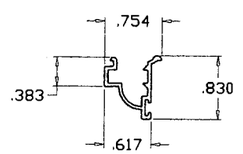

GLAZING STOP

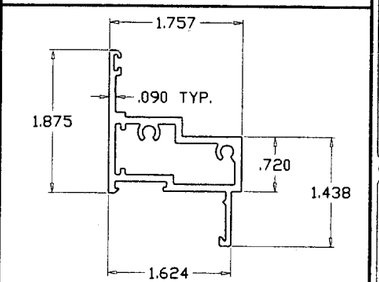

VENT (INSUL. LAM. GLASS)

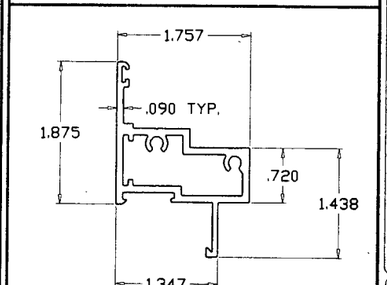

VENT (7/16" LAM. GLASS)

ITEM	PART #	QUANTITY	DESCRIPTION	MATERIAL	MANF./SUPPLIER/REMARKS
1	CGI-373	4	FRAME	6063-T6	INDALEX OR EQUIV.
2	CGI-378	4	VENT (5/16" LAM. GLASS)	6063-T6	INDALEX OR EQUIV.
2B	–	4	VENT (INSUL. LAM. GLASS)	6063-T6	INDALEX OR EQUIV.
2C	CGI-385	4	VENT (7/16" LAM. GLASS)	6063-T6	INDALEX OR EQUIV.
3	CGI-375	4	GLAZING BEAD	6063-T5	INDALEX OR EQUIV.
4	–	4	.060 THICK CORNER KEY	ALUMINUM	–
5	–	8	.060 THICK CORNER KEY	ST. STEEL	–
6	AP-425	AS REQD.	FRAME WEATHERSTRIPPING	–	SCHLEGEL APTUS
7	Q200 X190	AS REQD.	VENT WEATHERSTRIPPING	–	SCHLEGEL Q-LON
8	35-10-00-101	2/ VENT	4 BAR HINGE, AT TOP AND BOTTOM	STEEL	TRUTH, ATTACHED W/ (6) #8 X 3/8" SS SMS
9	24-13-00-202	2/ VENT	FACE MOUNT LOCK	STEEL	TRUTH, ATTACHED W/ (2) #8 X 3/8" SMS
10	–	2/ VENT	.110 THICK LOCK KEEPER, AT FRAME JAMB FACING LOCK	STEEL	CGI, ATTACHED W/ (2) #10 X 3/8" SS SMS
11	23-20-00-101	1	OPERATOR HANDLE	STEEL	TRUTH, ATTACHED W/ (2) #8 X 3/8" SS SMS
12	30175	1	OPERATOR TRACK	STEEL	TRUTH, ATTACHED W/ (2) #8 X 3/8" SS SMS
13	–	2/ CORNER	FRAME AND VENT ASSEMBLY SCREWS	–	#10 X 1-1/4" SS SMS

PRODUCT RENEWED
as complying with the Florida Building Code
Acceptance No 06-0928.04
Expiration Date OCT 26, 2007
By [illegible]
Miami-Dade Product Control Division

Engr: DR. HUMAYOUN FAROOQ
STRUCTURES
FLA. PE # 16557
C.A.N. 3538

SEP 7 2006

PRODUCT RENEWED
as complying with the Florida Building Code
Acceptance No 07-0928.02
Expiration Date 10/26/2008
By [illegible]
Miami Dade Product Control Division

AL-FAROOQ CORPORATION
ENGINEERS, PLANNERS & PRODUCT DESIGN
1235 SW 87 AVE
MIAMI, FLORIDA 33174
TEL. (305) 264-8100 FAX. (305) 262-6978
COMP-ANL\W98-100CGI

SERIES-238 ALUMINUM CASEMENT WINDOW

CONSTRUCTION GLASS IND. CORP.
10100 N.W. 25TH STREET
MIAMI, FL. 33172
TEL. (305) 593-6590 FAX. (305) 593-6592

revisions:

no	date	by	description
A	09.27.01		REVISED
C	09.01.06		UPDATED FOR 2004 FBC

date: 12-04-98
scale: 1/2" = 1"
dr. by: HAMID
chk. by:

drawing no.
W98-100

sheet 2 of 6

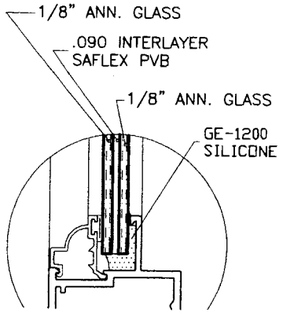

5/16" NOMINAL
GLASS TYPE '2'

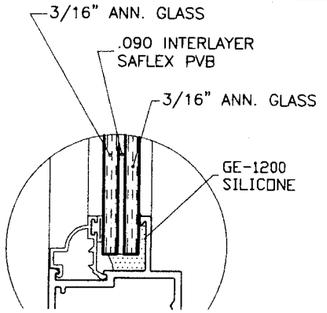

7/16" NOMINAL
GLASS TYPE '3'

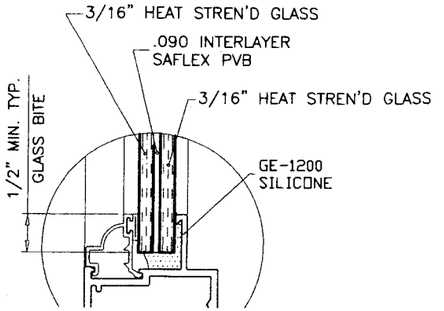

7/16" NOMINAL
GLASS TYPE '6'

PERFORMANCE VALUES OF IMPACT RESISTANT WINDOWS
NO SHUTTERS REQUIRED
REFER TO SHEETS 5 AND 6 FOR INSTALLATION DETAILS

WINDOW DIMS.		GLASS TYPE '2'		GLASS TYPE '3'		GLASS TYPE '6'	
WIDTH	HEIGHT	EXT. (+)	INT. (−)	EXT. (+)	INT. (−)	EXT. (+)	INT. (−)
20"	36"	110.0	194.3	110.0	210.0	110.0	210.0
24"		110.0	161.9	110.0	210.0	110.0	210.0
28"		110.0	138.8	110.0	210.0	110.0	210.0
30"		110.0	129.5	110.0	209.5	110.0	210.0
32"		110.0	121.4	110.0	191.1	110.0	210.0
36"		107.9	107.9	110.0	196.5	110.0	210.0
40"		97.1	97.1	110.0	120.0	110.0	120.0
42"		92.5	92.5	110.0	120.0	110.0	120.0
20"	42"	110.0	166.5	110.0	210.0	110.0	210.0
24"		110.0	138.8	110.0	210.0	110.0	210.0
28"		110.0	118.9	110.0	210.0	110.0	210.0
30"		110.0	111.0	110.0	210.0	110.0	210.0
32"		104.1	104.1	110.0	120.0	110.0	120.0
36"		92.5	92.5	110.0	120.0	110.0	120.0
40"		83.3	83.3	110.0	120.0	110.0	120.0
42"		79.3	79.3	110.0	120.0	110.0	120.0
20"	48"	110.0	145.7	110.0	210.0	110.0	210.0
24"		110.0	121.4	110.0	210.0	110.0	210.0
28"		103.8	104.1	110.0	120.0	110.0	120.0
30"		97.1	97.1	110.0	120.0	110.0	120.0
32"		91.1	91.1	110.0	120.0	110.0	120.0
36"		80.9	80.9	110.0	120.0	110.0	120.0
40"		72.8	72.8	110.0	120.0	110.0	120.0
42"		69.4	69.4	110.0	120.0	110.0	120.0
20"	54"	110.0	129.5	110.0	195.7	110.0	210.0
24"		98.0	107.9	110.0	210.0	110.0	210.0
28"		88.2	92.5	110.0	120.0	110.0	120.0
30"		84.4	86.3	110.0	120.0	110.0	120.0
32"		80.9	80.9	110.0	120.0	110.0	120.0
36"		71.9	71.9	110.0	120.0	110.0	120.0
40"		64.8	64.8	110.0	120.0	110.0	120.0
42"		61.7	61.7	110.0	120.0	110.0	120.0

PERFORMANCE VALUES OF IMPACT RESISTANT WINDOWS
NO SHUTTERS REQUIRED
REFER TO SHEETS 5 AND 6 FOR INSTALLATION DETAILS

WINDOW DIMS.		GLASS TYPE '2'		GLASS TYPE '3'		GLASS TYPE '6'	
WIDTH	HEIGHT	EXT. (+)	INT. (−)	EXT. (+)	INT. (−)	EXT. (+)	INT. (−)
20"	60"	98.8	112.6	110.0	210.0	110.0	210.0
24"		85.8	95.4	110.0	120.0	110.0	120.0
28"		76.7	83.3	110.0	120.0	110.0	120.0
30"		73.2	77.7	110.0	120.0	110.0	120.0
32"		70.2	72.8	110.0	120.0	110.0	120.0
36"		64.8	64.8	110.0	120.0	110.0	120.0
20"	66"	86.7	86.7	110.0	169.0	110.0	169.0
24"		73.4	73.4	110.0	120.0	110.0	120.0
28"		64.2	64.2	110.0	120.0	110.0	120.0
30"		60.6	60.6	110.0	118.2	110.0	118.2
32"		57.5	57.5	110.0	112.2	110.0	112.2
20"	72"	66.4	66.4	110.0	120.0	110.0	120.0
24"		56.1	56.1	109.3	109.3	109.3	109.3
28"		48.9	48.9	95.3	95.3	95.3	95.3
30"		46.0	46.0	89.8	89.8	89.8	89.8
32"		43.6	43.6	85.0	85.0	85.0	85.0
20"	78"	52.0	52.0	101.3	101.3	101.3	101.3
24"		43.8	43.8	85.4	85.4	85.4	85.4
28"		38.1	38.1	74.3	74.3	74.3	74.3
20"	84"	41.5	41.5	80.8	80.8	80.8	80.8
24"		34.9	34.9	68.0	68.0	68.0	68.0
19-1/8"	26"	110.0	210.0	110.0	210.0	110.0	210.0
26-1/2"		110.0	203.0	110.0	210.0	110.0	210.0
37"		110.0	145.4	110.0	210.0	110.0	210.0
19-1/8"	38-3/8"	110.0	190.6	110.0	210.0	110.0	210.0
26-1/2"		110.0	137.5	110.0	210.0	110.0	210.0
37"		98.5	98.5	110.0	120.0	110.0	120.0
19-1/8"	50-5/8"	110.0	144.5	110.0	210.0	110.0	210.0
26-1/2"		99.7	104.3	110.0	203.3	110.0	203.3
37"		74.7	74.7	110.0	120.0	110.0	120.0
19-1/8"	63"	96.7	104.2	110.0	203.2	110.0	203.2
26-1/2"		74.9	77.9	110.0	120.0	110.0	120.0
37"		60.0	60.0	110.0	117.0	110.0	117.0
19-1/8"	74-1/4"	63.0	63.0	110.0	120.0	110.0	120.0
26-1/2"		46.6	46.6	90.9	90.9	90.9	90.9

PRODUCT RENEWED
as complying with the Florida Building Code
Acceptance No 06-0928.04
Expiration Date OCT 26 2007
By Miami Dade Product Control Division

NOTE:
GLASS CAPACITIES ON THIS SHEET ARE BASED ON ASTM E1300-02 (3 SEC. GUSTS)

Engr: DR. HUMAYOUN FAROOQ
STRUCTURES
FLA. PE # 16557
C.A.N. 3538

SEP 7 2006

PRODUCT RENEWED
as complying with the Florida Building Code
Acceptance No 07-0928.02
Expiration Date 10/26/2008
By
Miami Dade Product Control Division

AL-FAROOQ CORPORATION
ENGINEERS, PLANNERS & PRODUCT DESIGN
1235 SW 87 AVE
MIAMI, FLORIDA 33174
TEL. (305) 264-8100 FAX. (305) 262-6978
COMP-ANL\W98-100CGI

SERIES-238 ALUMINUM CASEMENT WINDOW

CONSTRUCTION GLASS IND. CORP.
10100 N.W. 25TH STREET
MIAMI, FL. 33172
TEL. (305) 593-6590 FAX. (305) 593-6592

revisions:

no	date	by	description
A	09.27.01		CHARTS REV. PER ASTM E-1300
C	09.01.06		UPDATED FOR 2004 FBC

date: 12-04-98
scale: 1/2" = 1"
dr. by: HAMID
chk. by:

drawing no.
W98-100

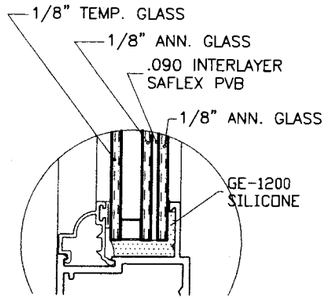

3/4" INSULATED
GLASS TYPE '2A'

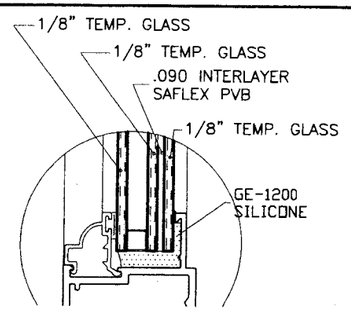

3/4" INSULATED
GLASS TYPE '3A'

PERFORMANCE VALUES OF IMPACT RESISTANT WINDOWS
NO SHUTTERS REQUIRED
REFER TO SHEETS 5 AND 6 FOR INSTALLATION DETAILS

WINDOW DIMS.		GLASS TYPE '2A'		GLASS TYPE '3A'	
WIDTH	HEIGHT	EXT. (+)	INT. (−)	EXT. (+)	INT. (−)
20"	36"	110.0	194.3	110.0	210.0
24"		110.0	161.9	110.0	210.0
28"		110.0	138.8	110.0	210.0
30"		110.0	129.5	110.0	210.0
32"		110.0	121.4	110.0	210.0
36"		107.9	107.9	110.0	210.0
40"		97.1	97.1	110.0	120.0
42"		92.5	92.5	110.0	120.0
20"	42"	110.0	166.5	110.0	210.0
24"		110.0	138.8	110.0	210.0
28"		110.0	118.9	110.0	210.0
30"		110.0	111.0	110.0	210.0
32"		104.1	104.1	110.0	120.0
36"		92.5	92.5	110.0	120.0
40"		83.3	83.3	110.0	120.0
42"		79.3	79.3	110.0	120.0
20"	48"	110.0	145.7	110.0	210.0
24"		110.0	121.4	110.0	210.0
28"		103.8	104.1	110.0	120.0
30"		97.1	97.1	110.0	120.0
32"		91.1	91.1	110.0	120.0
36"		80.9	80.9	110.0	120.0
40"		72.8	72.8	110.0	120.0
42"		69.4	69.4	110.0	120.0
20"	54"	110.0	129.5	110.0	210.0
24"		98.0	107.9	110.0	210.0
28"		88.2	92.5	110.0	120.0
30"		84.4	86.3	110.0	120.0
32"		80.9	80.9	110.0	120.0
36"		71.9	71.9	110.0	120.0
40"		64.8	64.8	110.0	120.0
42"		61.7	61.7	110.0	120.0

PERFORMANCE VALUES OF IMPACT RESISTANT WINDOWS
NO SHUTTERS REQUIRED
REFER TO SHEETS 5 AND 6 FOR INSTALLATION DETAILS

WINDOW DIMS.		GLASS TYPE '2A'		GLASS TYPE '3A'	
WIDTH	HEIGHT	EXT. (+)	INT. (−)	EXT. (+)	INT. (−)
20"	60"	98.8	112.6	110.0	210.0
24"		85.8	95.4	110.0	120.0
28"		76.7	83.3	110.0	120.0
30"		73.2	77.7	110.0	120.0
32"		70.2	72.8	110.0	120.0
36"		64.8	64.8	110.0	120.0
20"	66"	86.7	86.7	110.0	169.0
24"		73.4	73.4	110.0	120.0
28"		64.2	64.2	110.0	120.0
30"		60.6	60.6	110.0	118.2
32"		57.5	57.5	110.0	112.2
20"	72"	66.4	66.4	110.0	120.0
24"		56.1	56.1	109.3	109.3
28"		48.9	48.9	95.3	95.3
30"		46.0	46.0	89.8	89.8
32"		43.6	43.6	85.0	85.0
20"	78"	52.0	52.0	101.3	101.3
24"		43.8	43.8	85.4	85.4
28"		38.1	38.1	74.3	74.3
20"	84"	41.5	41.5	80.8	80.8
24"		34.9	34.9	68.0	68.0
19-1/8"	26"	110.0	210.0	110.0	210.0
26-1/2"		110.0	203.0	110.0	210.0
37"		110.0	145.4	110.0	210.0
19-1/8"	38-3/8"	110.0	190.6	110.0	210.0
26-1/2"		110.0	137.5	110.0	210.0
37"		98.5	98.5	110.0	120.0
19-1/8"	50-5/8"	110.0	144.5	110.0	210.0
26-1/2"		99.7	104.3	110.0	203.3
37"		74.7	74.7	110.0	120.0
19-1/8"	63"	96.7	104.2	110.0	203.2
26-1/2"		74.9	77.9	110.0	120.0
37"		60.0	60.0	110.0	117.0
19-1/8"	74-1/4"	63.0	63.0	110.0	120.0
26-1/2"		46.6	46.6	90.9	90.9

PRODUCT RENEWED
as complying with the Florida
Building Code
Acceptance No. 06-0928.04
Expiration Date OCT 26 2007
By
Miami-Dade Product Control
Division

NOTE:
GLASS CAPACITIES ON THIS SHEET ARE
BASED ON ASTM E1300-02 (3 SEC. GUSTS)

Engr: DR. HUMAYOUN FAROOQ
STRUCTURES
FLA. PE # 16557
C.A.N. 3538

SEP 7 2006

PRODUCT RENEWED
as complying with the Florida
Building Code
Acceptance No 07-0928.02
Expiration Date 10/26/2008
By
Miami Dade Product Control
Division

AL-FAROOQ CORPORATION
ENGINEERS, PLANNERS & PRODUCT DESIGN
1235 SW 87 AVE
MIAMI, FLORIDA 33174
TEL. (305) 264-8100 FAX. (305) 262-6978

COMP-ANL\W98-100CGI

SERIES-238 ALUMINUM CASEMENT WINDOW

CONSTRUCTION GLASS IND. CORP.
10100 N.W. 25TH STREET
MIAMI, FL. 33172
TEL. (305) 593-6590 FAX. (305) 593-6592

revisions:

no	date	by	description
A	09.27.01		CHARTS REV. PER ASTM E-1300
C	09.01.06		UPDATED FOR 2004 FBC

date: 12-04-98
scale: 1/2" = 1"
dr. by: HAMID
chk. by:

drawing no.
W98-100

INSTALLATION CONDITIONS (APPLIES TO ALL FOUR SIDES)

FOR ANCHOR PERFORMANCE VALUES SEE SHEET 6

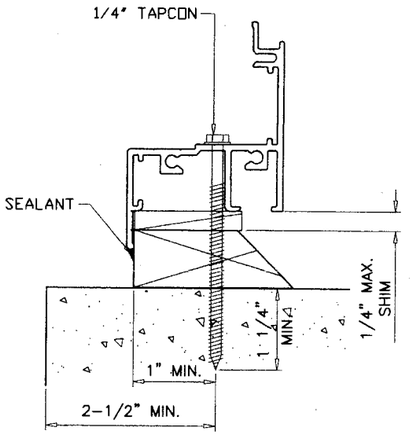

INSTALLATION TYPE '1'

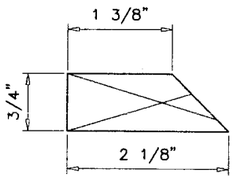

WOOD BUCK TYPE '1'

MATERIAL: PRESSURE TREATED

TYPICAL INSTALLATION DETAIL
ON ALL FOUR SIDES/USING WOOD

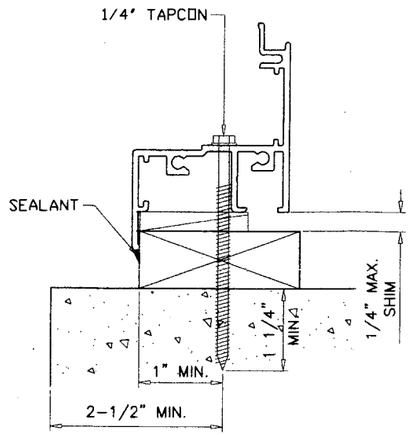

INSTALLATION TYPE '2'

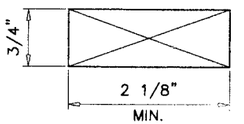

WOOD BUCK TYPE '2'

MATERIAL: PRESSURE TREATED

TYPICAL INSTALLATION DETAIL
ON ALL FOUR SIDES/USING WOOD

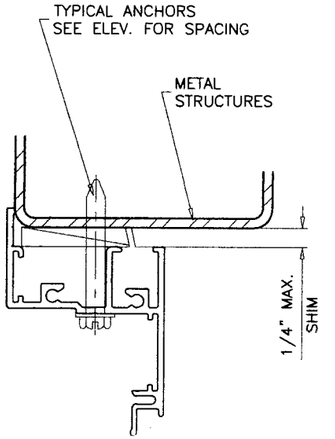

ATTACHMENT TO
METAL STRUCTURES

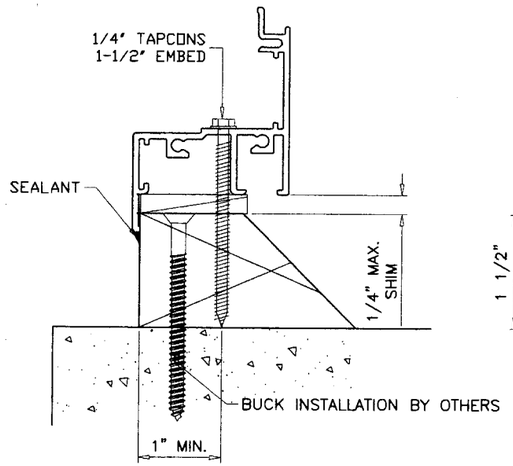

INSTALLATION TYPE '3'

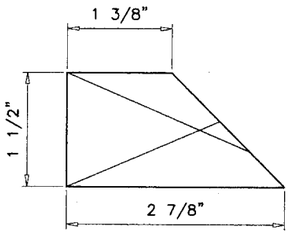

WOOD BUCK TYPE '3'

MATERIAL: PRESSURE TREATED

TYPICAL INSTALLATION DETAIL
ON ALL FOUR SIDES/USING WOOD

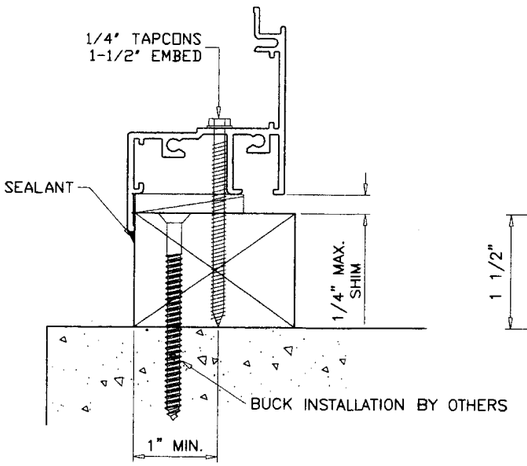

INSTALLATION TYPE '4'

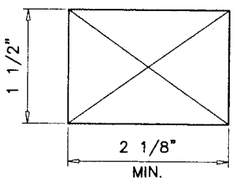

WOOD BUCK TYPE '4'

MATERIAL: PRESSURE TREATED

TYPICAL INSTALLATION DETAIL
ON ALL FOUR SIDES/USING WOOD

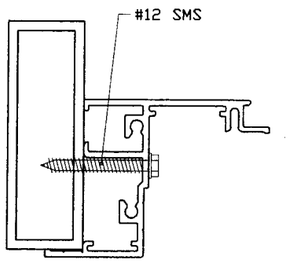

ATTACHMENT TO
APPROVED MULLIONS

WOOD BUCKS NOT BY CGI CORP., MUST SUSTAIN LOADS IMPOSED BY GLAZING SYSTEM AND TRANSFER THEM TO THE BUILDING STRUCTURE.

PRODUCT RENEWED
as complying with the Florida Building Code
Acceptance No 06-0928.04
Expiration Date 07/26/2007
By Vshay I. Chand
Miami Dade Product Control Division

Engr: DR. HUMAYOUN FAROOQ
STRUCTURES
FLA. PE # 16557
C.A.N. 3538

SEP 7 2006

PRODUCT RENEWED
as complying with the Florida Building Code
Acceptance No 07-0928.03
Expiration Date 10/26/2008
By
Miami Dade Product Control Division

AL-FAROOQ CORPORATION
ENGINEERS, PLANNERS & PRODUCT DESIGN
1235 SW 87 AVE
MIAMI, FLORIDA 33174
TEL. (305) 264-8100 FAX. (305) 262-6978
COMP-ANL\W98-100CGI

SERIES-238 ALUMINUM CASEMENT WINDOW

CONSTRUCTION GLASS IND. CORP.
10100 N.W. 25TH STREET
MIAMI, FL. 33172
TEL. (305) 593-6590 FAX. (305) 593-6592

revisions:

no	date	by	description
A	09.27.01		REVISED
C	09.01.06		UPDATED FOR 2004 FBC

date: 12-04-98
scale: 1/2" = 1"
dr. by: HAMID
chk. by:

drawing no.
W98-100

sheet 5 of 6

PERFORMANCE VALUES OF INSTALLATION ANCHORS REFER TO SHEET 5 FOR DETAILS		
WINDOW DIMS.		EXT. (+) INT. (−)
WIDTH	HEIGHT	
20"	36"	210.0
24"		210.0
28"		208.3
30"		194.4
32"		182.3
36"		162.0
40"		145.8
42"		138.9
20"	42"	210.0
24"		208.3
28"		178.5
30"		166.6
32"		156.2
36"		138.9
40"		125.0
42"		119.0
20"	48"	210.0
24"		210.0
28"		208.3
30"		194.4
32"		182.3
36"		162.0
40"		145.8
42"		138.9
20"	54"	210.0
24"		210.0
28"		185.1
30"		172.8
32"		162.0
36"		144.0
40"		129.6
42"		123.4
20"	60"	210.0
24"		194.4
28"		166.6
30"		155.5
32"		145.8
36"		129.6
20"	66"	210.0
24"		210.0
28"		189.4
30"		176.7
32"		165.7
20"	72"	210.0
24"		202.5
28"		173.6
30"		162.0
32"		151.9
20"	78"	210.0
24"		186.9
28"		160.2
20"	84"	210.0
24"		208.3

PERFORMANCE VALUES OF INSTALLATION ANCHORS REFER TO SHEET 5 FOR DETAILS		
WINDOW DIMS.		EXT. (+) INT. (−)
WIDTH	HEIGHT	
19-1/8"	26"	210.0
26-1/2"		210.0
37"		210.0
19-1/8"	38-3/8"	210.0
26-1/2"		206.5
37"		147.9
19-1/8"	50-5/8"	210.0
26-1/2"		208.7
37"		149.4
19-1/8"	63"	210.0
26-1/2"		167.7
37"		120.1
19-1/8"	74-1/4"	210.0
26-1/2"		177.8

TYPICAL ANCHORS: SEE ELEV. FOR SPACING

1/4" TAPCONS

INTO 2BY WOOD BUCKS OR WOOD STRUCTURES
1-1/2" MIN. PENETRATION INTO WOOD

THRU 1BY BUCKS INTO CONC. OR MASONRY
1-1/4" MIN. EMBED INTO CONC. OR MASONRY

DIRECTLY INTO CONC. OR MASONRY
1-1/4" MIN. EMBED INTO CONC. OR MASONRY

#14 SMS OR SELF DRILLING SCREWS

INTO METAL STRUCTURES

STEEL : 12 GA. MIN. (Fy = 36 KSI MIN.)
ALUMINUM : 1/8" THK. MIN. (6063-T5 MIN.)
(STEEL IN CONTACT WITH ALUMINUM TO BE PLATED OR PAINTED)

#12 SMS OR SELF DRILLING SCREWS

INTO MIAMI-DADE APPROVED MULLIONS (MIN. THK. = 1/8")
(NO SHIM SPACE)

PRODUCT RENEWED
as complying with the Florida Building Code
Acceptance No 06-0928.04
Expiration Date OCT 26, 2007
By Ishaq I. Uhanda
Miami Dade Product Control Division

Engr: DR. HUMAYOUN FAROOQ
STRUCTURES
FLA. PE # 16557
C.A.N. 3538

SEP 7 2006

PRODUCT RENEWED
as complying with the Florida Building Code
Acceptance No 07-0928.02
Expiration Date 10/26/2008
By
Miami Dade Product Control Division

AL-FAROOQ CORPORATION
ENGINEERS, PLANNERS & PRODUCT DESIGN
1235 SW 87 AVE
MIAMI, FLORIDA 33174
TEL. (305) 264-8100 FAX. (305) 262-6978
COMP-ANL\W98-100CGI

SERIES-238 ALUMINUM CASEMENT WINDOW

CONSTRUCTION GLASS IND. CORP.
10100 N.W. 25TH STREET
MIAMI, FL. 33172
TEL. (305) 593-6590 FAX. (305) 593-65 12

revisions:

no	date	by	description
A	09.27.01		CHARTS REV. PER 1997 NDS
C	09.01.06		UPDATED FOR 2004 FBC

date: 12-04-98
scale: 1/2" = 1"
dr. by: HAMID
chk. by:

drawing no.
W98-100