MIAMI-DADE COUNTY

BUILDING CODE COMPLIANCE OFFICE (BCCO)
PRODUCT CONTROL DIVISION

MIAMI-DADE COUNTY, FLORIDA
METRO-DADE FLAGLER BUILDING
140 WEST FLAGLER STREET, SUITE 1603
MIAMI, FLORIDA 33130-1563
(305) 375-2901 FAX (305) 375-2908
ww.buildingcodeonline.com

# NOTICE OF ACCEPTANCE (NOA)

**YKK AP America**
**332 Firetower Road**
**Dublin, GA 31021**

**SCOPE:**
This NOA is being issued under the applicable rules and regulations governing the use of construction materials. The documentation submitted has been reviewed by Miami-Dade County Product Control Division and accepted by the Board of Rules and Appeals (BORA) to be used in Miami Dade County and other areas where allowed by the Authority Having Jurisdiction (AHJ).

This NOA shall not be valid after the expiration date stated below. The Miami-Dade County Product Control Division (In Miami Dade County) and/or the AHJ (in areas other than Miami Dade County) reserve the right to have this product or material tested for quality assurance purposes. If this product or material fails to perform in the accepted manner, the manufacturer will incur the expense of such testing and the AHJ may immediately revoke, modify, or suspend the use of such product or material within their jurisdiction. BORA reserves the right to revoke this acceptance, if it is determined by Miami-Dade County Product Control Division that this product or material fails to meet the requirements of the applicable building code.

This product is approved as described herein, and has been designed to comply with the Florida Building Code, including the High Velocity Hurricane Zone.

**DESCRIPTION: Series "YSD700" Aluminum Sliding Glass Door (NI)**

**APPROVAL DOCUMENT:** Drawing No. **W03-66**, titled "YSD700 Aluminum Sliding Glass Door (N.I.)", sheets 1 through 8 of 8, dated 08/14/03 and last revised on Jan 16, 2008 prepared by Al-Farooq Corporation, signed and sealed by Yiping Wang , P.E., bearing the Miami-Dade County Product Control Revision stamp with the Notice of Acceptance number and expiration date by the Miami-Dade County Product Control Division.

**MISSILE IMPACT RATING: None. Approved Hurricane Protection system, as applicable, per FBC required.**

**LABELING:** Each unit shall bear a permanent label with the manufacturer's name or logo, city, state and following statement: "Miami-Dade County Product Control Approved", unless otherwise noted herein.

**RENEWAL** of this NOA shall be considered after a renewal application has been filed and there has been no change in the applicable building code negatively affecting the performance of this product.

**TERMINATION** of this NOA will occur after the expiration date or if there has been a revision or change in the materials, use, and/or manufacture of the product or process. Misuse of this NOA as an endorsement of any product, for sales, advertising or any other purposes shall automatically terminate this NOA. Failure to comply with any section of this NOA shall be cause for termination and removal of NOA.

**ADVERTISEMENT:** The NOA number preceded by the words Miami-Dade County, Florida, and followed by the expiration date may be displayed in advertising literature. If any portion of the NOA is displayed, then it shall be done in its entirety.

**INSPECTION:** A copy of this entire NOA shall be provided to the user by the manufacturer or its distributors and shall be available for inspection at the job site at the request of the Building Official.
This NOA **revises& renews NOA # 04-0603.01** and, consists of this page 1 and evidence page E-1, as well as approval document mentioned above.
The submitted documentation was reviewed by **Ishaq I. Chanda, P.E.**

MIAMI-DADE COUNTY APPROVED

1/29/18

**YKK AP America**

## NOTICE OF ACCEPTANCE: EVIDENCE SUBMITTED

**A. DRAWINGS**

1. Manufacturer's die drawings and sections.
2. Drawing No. **W03-66**, titled "YSD700 Aluminum Sliding Glass Door (NI)", sheets 1 through 8 of 8, dated 08/13/03 and last revised on Jan 16, 2008 prepared by Al-Farooq Corporation, signed and sealed by Yiping Wang, P.E.

**B. TESTS** (transferred from file # **04-0603.01**)

1. Test reports on 1) Air Infiltration Test, per FBC, TAS 202-94
   2) Uniform Static Air Pressure Test, Loading per FBC, TAS 202-94
   3) Water Resistance Test, per FBC, TAS 202-94
   4) Forced Entry Test, per FBC 2411 3.2.1 and TAS 202-94

   Along with installation diagram of an aluminum sliding glass door, prepared by Hurricane Test Laboratory, Inc., Test Report No. **HTL-0231-0709-03**, specimen #3, dated 08/05/03, **HTL-231-0113.03** (Sp#1) & **HTL-0231-0910-02** (Sp#5), dated 07-05-03, all signed and sealed by Vinu J. Abraham, P.E.
2. Supporting test reports HTL-0231-1004-03 (sp#1 & 2), HTL-0231-0709-03 (Sp #2, 4 & 6), issued by Hurricane Test Laboratory, Inc, signed and sealed by Vinu J. Abraham, P.E.

**C. CALCULATIONS**

1. Comparative analysis & anchor verification calculations dated 09-08-07 complying w/ FBC 2004, prepared by Al-Farooq Corporation, signed and sealed by Dr. Humayoun Farooq, P.E.
2. Comparative analysis & anchor verification calculations dated 03-31-04, prepared by Al-Farooq Corporation, signed and sealed by Dr. Humayoun Farooq, P.E.
3. Glazing complies w/ASTME-1300-02.

**D. QUALITY ASSURANCE**

1. Miami Dade Building Code Compliance Office (BCCO)

**E. MATERIAL CERTIFICATIONS**

1. None.

**F. STATEMENTS**

1. Statement letter of conformance & no financial interest, dated 09/08/07 issued by Al-Farooq Corporation, signed and sealed by Dr. Humayoun Farooq, P.E.
2. Statement letter of lab compliance as part of above referenced test reports.

**G. OTHER**

1. This NOA **revises & renews NOA # 04-0603.01** , expiring Jan. 08, 2009

Ishaq I. Chanda

**Ishaq I. Chanda, P.E.**
**Product Control Examiner**
**NOA No 07-1010.01**
**Expiration Date: January 01, 2014**
**Approval Date: February 21, 2008**

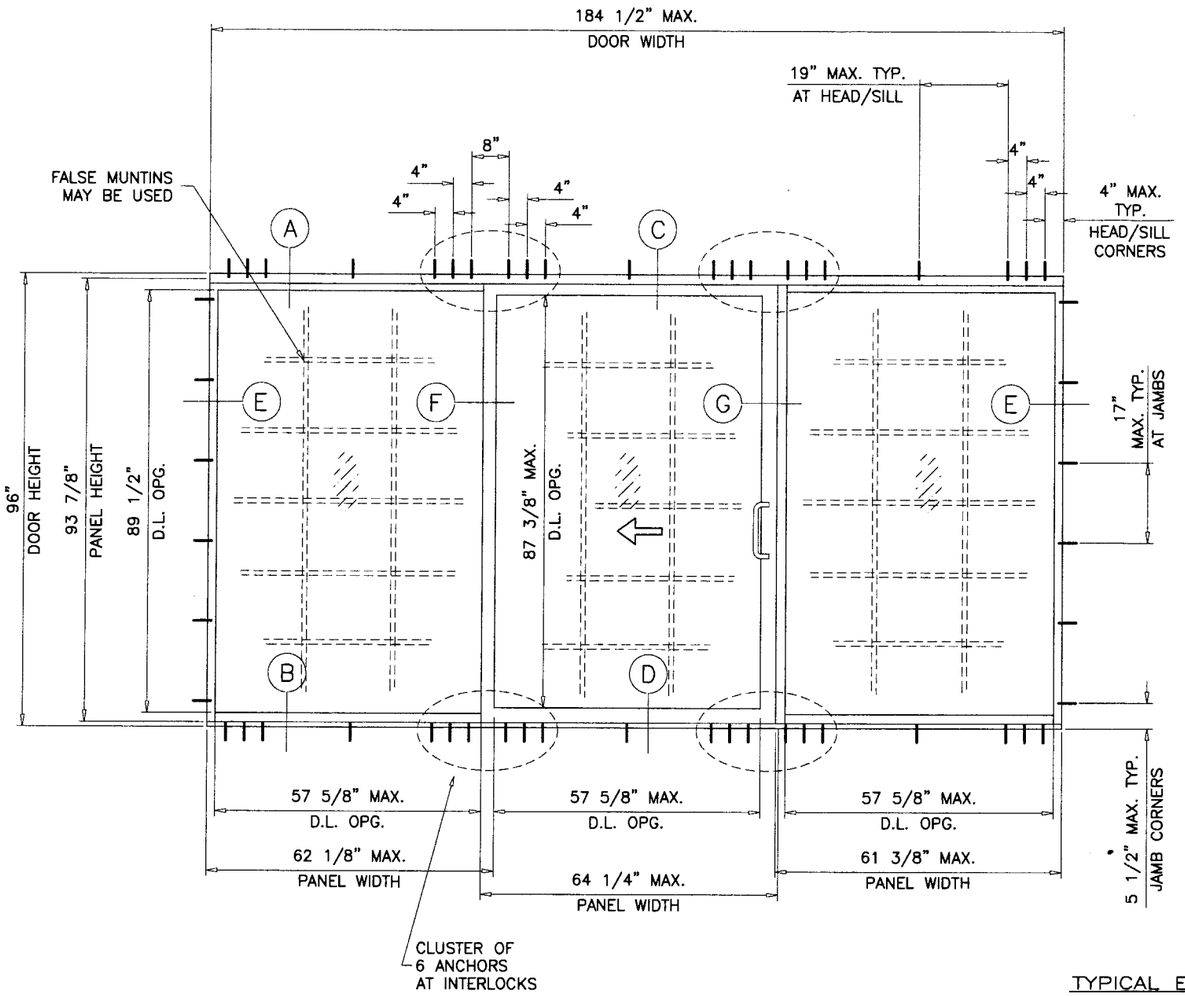


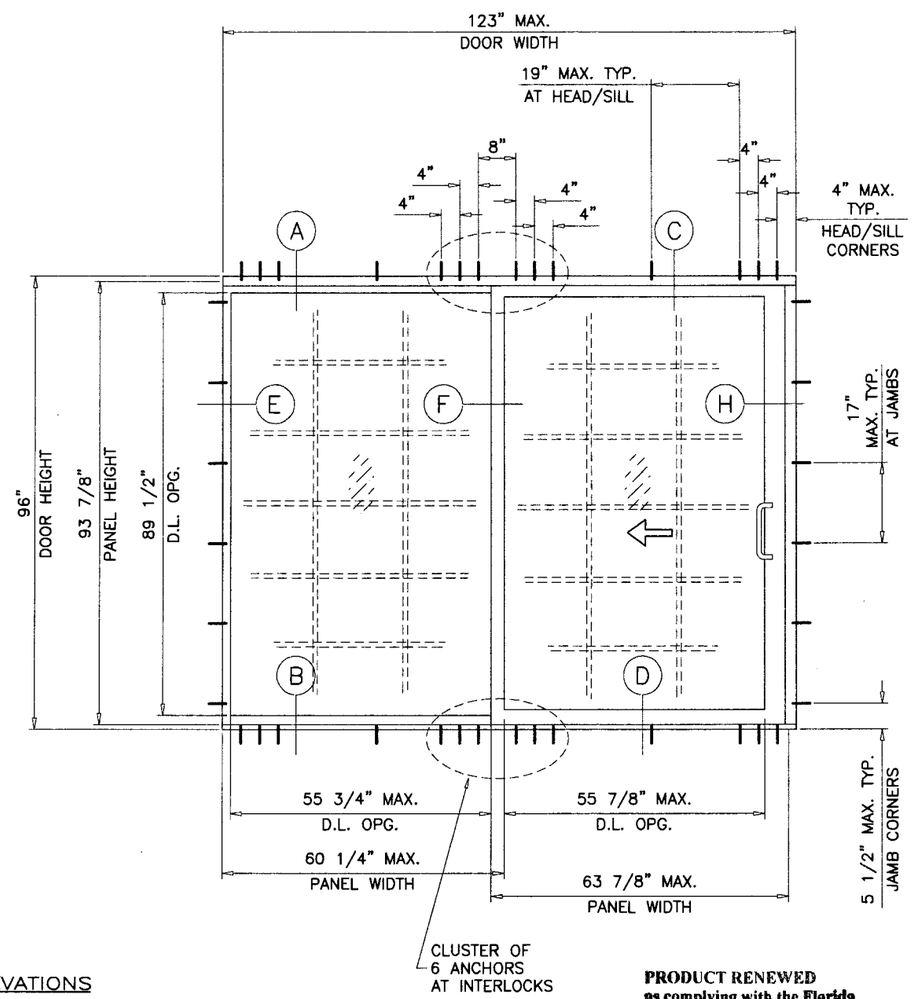


TYPICAL ELEVATIONS
TESTED UNITS

**PRODUCT RENEWED**
**as complying with the Florida Building Code**
**Acceptance No** 07-1010.01
**Expiration Date** JAN 08, 2014
**By** Ishaq I. Chanda
**Miami Dade Product Control Division**

## YSD700 ALUMINUM SLIDING GLASS DOOR (N.I.)

DESIGN LOAD RATING FOR THESE DOORS TO BE AS PER CHART SHOWN ON SHEET 2.

THIS PRODUCT HAS BEEN DESIGNED AND TESTED TO COMPLY WITH THE REQUIREMENTS OF THE FLORIDA BUILDING CODE 2004 EDITION INCLUDING HIGH VELOCITY HURRICANE ZONE (HVHZ).

WOOD BUCKS BY OTHERS, MUST BE ANCHORED PROPERLY TO TRANSFER LOADS TO THE STRUCTURE.

ANCHORS SHALL BE AS LISTED, SPACED AS SHOWN ON DETAILS, ANCHORS EMBEDMENT TO BASE MATERIAL SHALL BE BEYOND WALL DRESSING OR STUCCO.

ANCHORING OR LOADING CONDITIONS NOT SHOWN IN THESE DETAILS ARE NOT PART OF THIS APPROVAL.

A LOAD DURATION INCREASE IN ALLOWABLE STRESS IS USED IN DESIGN OF ANCHORS INTO WOOD ONLY.

MATERIALS INCLUDING BUT NOT LIMITED TO STEEL/METAL SCREWS, THAT COME INTO CONTACT WITH OTHER DISSIMILAR MATERIALS SHALL MEET THE REQUIREMENTS OF 2004 FLORIDA BLDG. CODE SECTION 2003.8.4.

DAYLITE OPENINGS:
D.L.O. HEIGHT (FIX. PANEL) = DOOR HEIGHT – 6.50"
D.L.O. HEIGHT (OPER. PANEL) = DOOR HEIGHT – 8.625"
D.L.O. WIDTH (FIX. PANEL) = PANEL WIDTH – 4.50"
D.L.O. WIDTH (OPER. PANEL) = PANEL WIDTH – 6.625"

THIS SYSTEM IS NOT RATED FOR IMPACT.

INSTALLATION OF THIS PRODUCT IN THE HVHZ AREA REQUIRES THE USE OF APPROVED SHUTTERS OR EXTERNAL PROTECTION DEVICES COMPLYING WITH HVHZ REQUIREMENTS.

INSTALLATION OF THIS SYSTEM OUTSIDE THE HVHZ AREA SHALL MEET THE APPLICABLE REQUIREMENTS FOR WIND BORNE DEBRIS PROTECTION.

Engr: YIPING WANG
STRUCTURES
FLA. PE # 55983
C.A.N. 3538

JAN 16 2008

MONOLITHIC INSULATING GLASS
NON-IMPACT


**AL-FAROOQ CORPORATION**
ENGINEERS & PRODUCT DEVELOPMENT
1235 S.W. 87 AVE
MIAMI, FLORIDA 33174
TEL. (305) 264-8100 FAX. (305) 262-6978
COMP-ANL\W03-66YKK

YSD700 ALUMINUM SLIDING GLASS DOOR (N.I.)

YKK AP AMERICA INC.
332 FIRETOWER ROAD
DUBLIN, GEORGIA 31021
TEL.(478) 277-1955 FAX(478) 277-1978


revisions:

| no | date | by | description |
|---|---|---|---|
| A | 10.31.03 | | REV. PER BCCO COMMENTS |
| B | 02.16.04 | | OXXO DOOR ADD. |
| C | 06.08.07 | | UPDATED FOR 2004 FBC |
| D | 01.12.08 | | REV. PER BCCO COMMENTS |

date: 08-14-03
scale: 3/8"=1'-0"
dr. by: HAMID
chk. by:

drawing no.
W03-66

sheet 1 of 8

| DESIGN LOAD CAPACITY – PSF | | | |
|---|---|---|---|
| PANEL WIDTH NOMINAL INCHES | DOOR HEIGHT INCHES | GLASS TYPE 'F' EXT. (+) | GLASS TYPE 'F' INT. (–) |
| 30 | 80 (6) | 133.3 | 210.0 |
| 36 | | 133.3 | 210.0 |
| 42 | | 133.3 | 194.3 |
| 48 | | 133.3 | 174.5 |
| 54 | | 133.3 | 155.1 |
| 60 | | 133.3 | 139.6 |
| 64 | | 130.8 | 130.8 |
| 66 | | 126.9 | 126.9 |
| 30 | 84 (6) | 133.3 | 210.0 |
| 36 | | 133.3 | 202.7 |
| 42 | | 133.3 | 182.0 |
| 48 | | 133.3 | 166.1 |
| 54 | | 133.3 | 147.7 |
| 60 | | 132.9 | 132.9 |
| 64 | | 124.6 | 124.6 |
| 66 | | 120.8 | 120.8 |
| 30 | 90 (6) | 133.3 | 210.0 |
| 36 | | 133.3 | 185.8 |
| 42 | | 133.3 | 166.2 |
| 48 | | 133.3 | 152.0 |
| 54 | | 133.3 | 137.8 |
| 60 | | 124.1 | 124.1 |
| 64 | | 116.3 | 116.3 |
| 30 | 96 (6) | 133.3 | 198.2 |
| 36 | | 133.3 | 171.5 |
| 42 | | 133.3 | 152.9 |
| 48 | | 133.3 | 139.3 |
| 54 | | 128.9 | 128.9 |
| 60 | | 116.3 | 116.3 |
| 30 | 102 (7) | 133.3 | 178.5 |
| 36 | | 133.3 | 151.1 |
| 42 | | 131.9 | 131.9 |
| 48 | | 118.0 | 118.0 |
| 54 | | 107.6 | 107.6 |
| 30 | 108 (7) | 133.3 | 149.8 |
| 36 | | 126.6 | 126.6 |
| 42 | | 110.3 | 110.3 |
| 48 | | 98.4 | 98.4 |
| 54 | | 89.5 | 89.5 |

( ) = NO. OF ANCHORS AT DOOR JAMBS

NOTE:
GLASS CAPACITIES ON THIS SHEET ARE BASED ON ASTM E1300-02 (3 SEC. GUSTS) AND FLORIDA BUILDING COMMISSION DECLARATORY STATEMENT DCA05-DEC-219

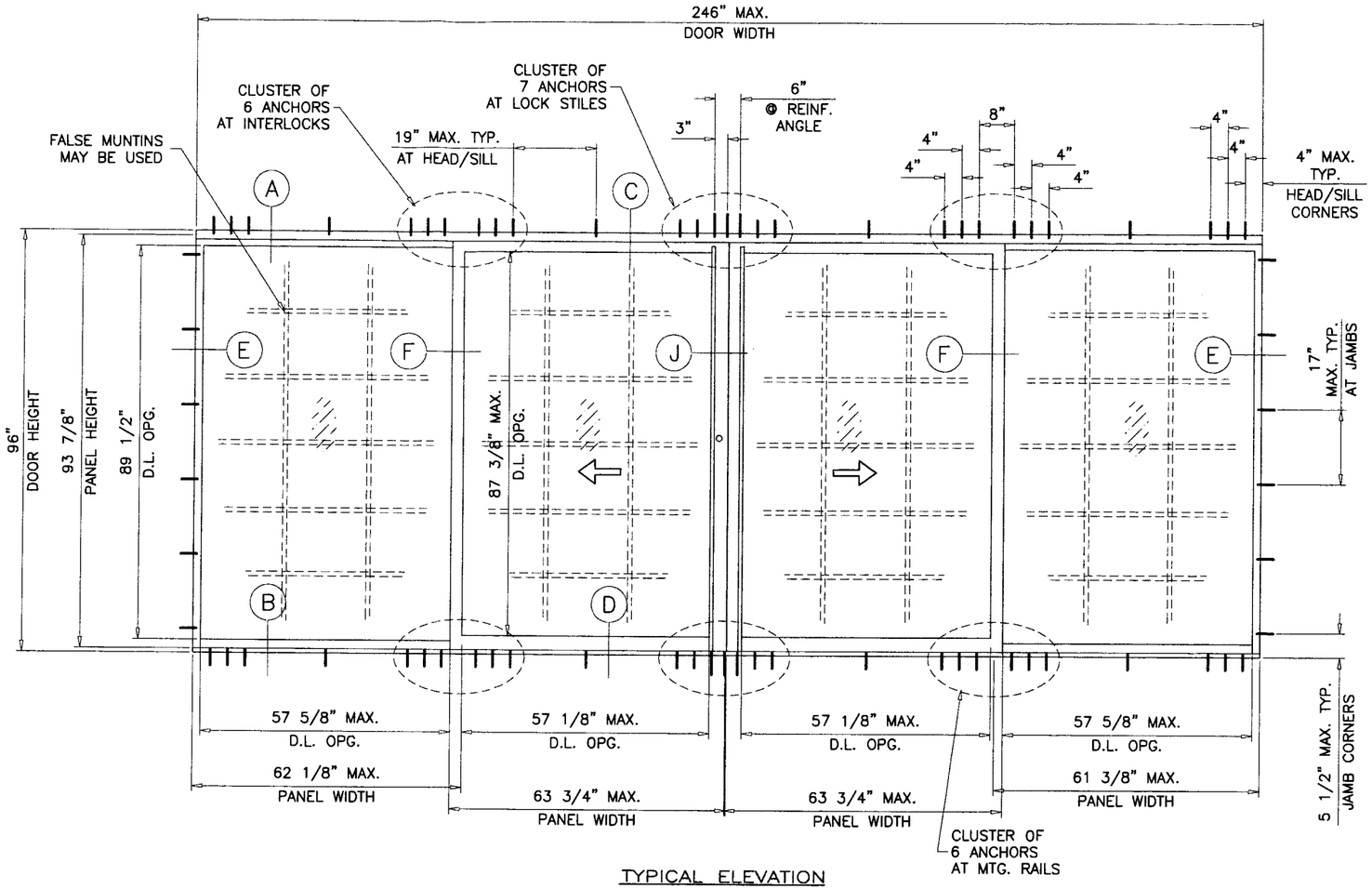


TYPICAL ELEVATION
TESTED UNIT

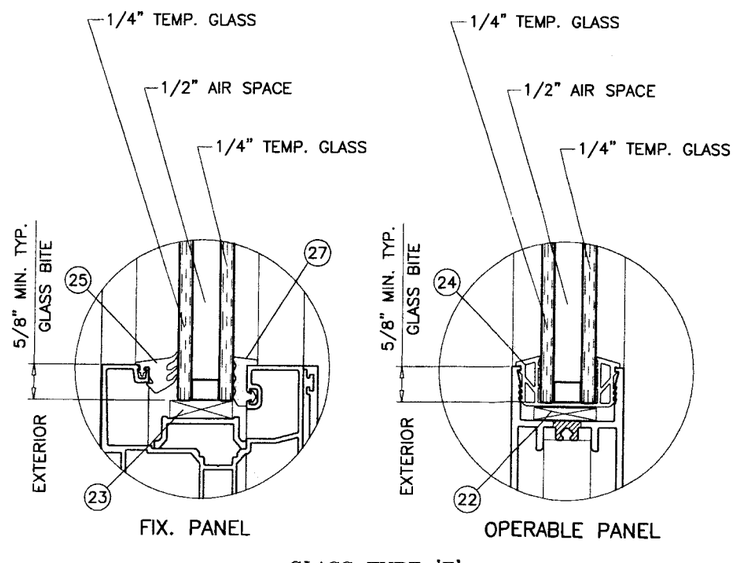


FIX. PANEL

OPERABLE PANEL

GLASS TYPE 'F'

PRODUCT RENEWED
as complying with the Florida Building Code
Acceptance No 07-1010.01
Expiration Date JAN 08, 2014
By Ishaq I. Chanda
Miami Dade Product Control Division

Engr: YIPING WANG
STRUCTURES
FLA. PE # 55983
C.A.N. 3538
JAN 16 2008


AL-FAROOQ CORPORATION
ENGINEERS & PRODUCT DEVELOPMENT
1235 S.W. 87 AVE
MIAMI, FLORIDA 33174
TEL. (305) 264-8100 FAX. (305) 262-6978
COMP-ANL\W03-66YKK


YSD700 ALUMINUM SLIDING GLASS DOOR (N.I.)


YKK AP AMERICA INC.
332 FIRETOWER ROAD
DUBLIN, GEORGIA 31021
TEL.(478) 277-1955 FAX(478) 277-1978


revisions:

| no | date | by | description |
|---|---|---|---|
| A | 10.31.03 | | REV. PER BCCO COMMENTS |
| B | 02.16.04 | | OXXO DOOR ADD. |
| C | 06.08.07 | | UPDATED FOR 2004 FBC |
| D | 01.12.08 | | REV. PER BCCO COMMENTS |

date: 08-14-03
scale: 3/8"=1'-0"
dr. by: HAMID
chk. by:

drawing no.
W03-66

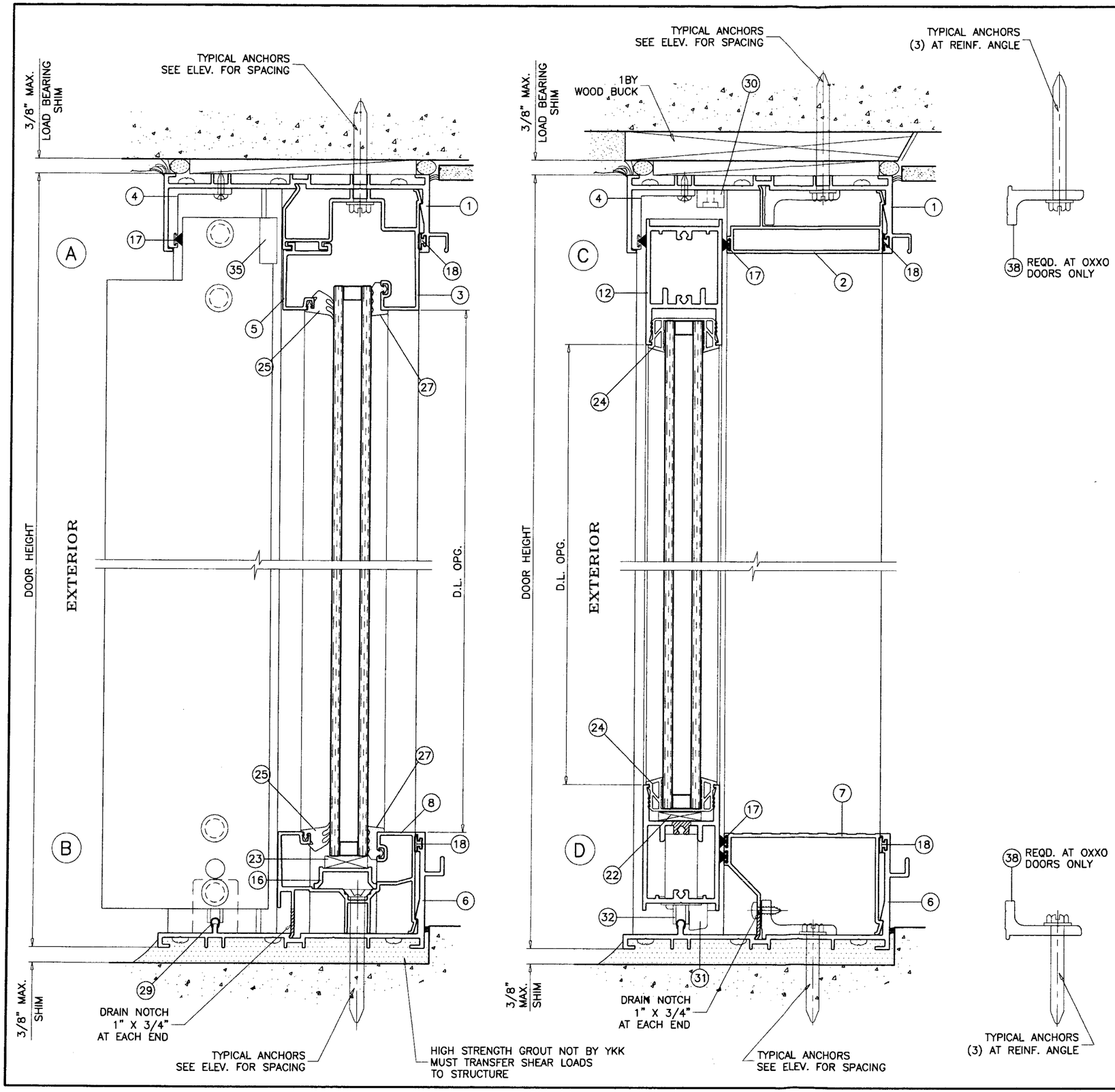


**PRODUCT RENEWED**
as complying with the **Florida**
Building Code
Acceptance No 07-1010.01
Expiration Date JAN 08, 2014
By Ishaq I. Unanda
Miami-Dade Product Control
Division

Engr: YIPING WANG
STRUCTURES
FLA. PE # 55983
C.A.N. 3538

JAN 16 2008

| revisions: | | | |
|---|---|---|---|
| no | date | by | description |
| A | 10.31.03 | | REV. PER BCCO COMMENTS |
| B | 02.16.04 | | OXXO DOOR ADD. |
| C | 06.08.07 | | UPDATED FOR 2004 FBC |
| D | 01.12.08 | | REV. PER BCCO COMMENTS |

date: 08-14-03
scale: 3/8" = 1"
dr. by: HAMID
chk. by:

YSD700 ALUMINUM SLIDING GLASS DOOR (N.I.)

YKK ap®
YKK AP AMERICA INC.
332 FIRETOWER ROAD
DUBLIN, GEORGIA 31021
TEL(478) 277-1955 FAX(478) 277-1978

AL-FAROOQ CORPORATION
ENGINEERS & PRODUCT DEVELOPMENT
1235 S.W. 87 AVE
MIAMI, FLORIDA 33174
TEL. (305) 264-8100 FAX. (305) 262-6978
COMP-ANL\W03-66YKK

drawing no.
W03-66

sheet 3 of 8

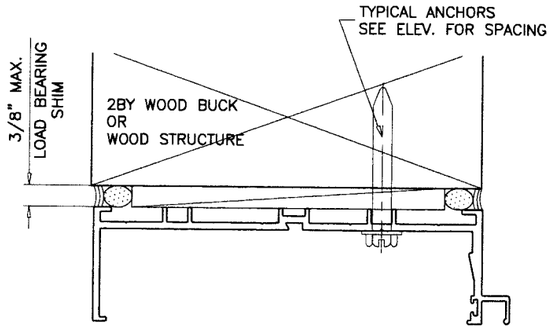


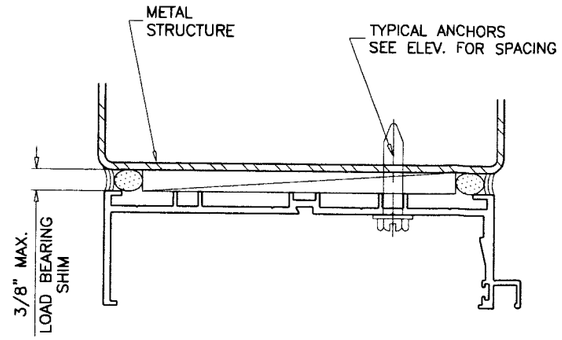


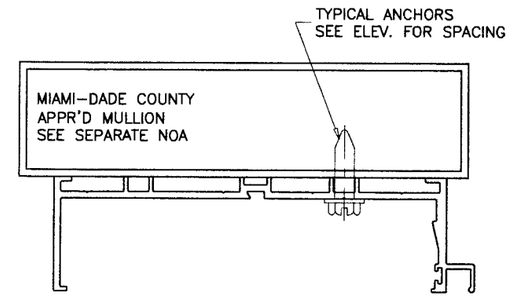


WOOD BUCKS AND METAL STRUCTURE NOT BY YKK AMERICA INC.
MUST SUSTAIN LOADS IMPOSED BY GLAZING SYSTEM
AND TRANSFER THEM TO THE BUILDING STRUCTURE.

## TYPICAL ANCHORS: SEE ELEV./CHART FOR SPACING

TYPE A: 5/16" DIA TAPCONS BY 'ELCO'
INTO 2BY WOOD BUCKS OR WOOD STRUCTURES
1-1/2" MIN. PENETRATION INTO WOOD

THRU 1BY WOOD BUCKS INTO CONCRETE
1-1/4" MIN. EMBED INTO CONCRETE

DIRECTLY INTO CONCRETE
1-1/4" MIN. EMBED INTO CONCRETE

DIRECTLY INTO MASONRY
1-1/4" MIN. EMBED INTO MASONRY

TYPE B: 5/16" DRILLFLEX SELF DRILLING SCREWS BY 'ELCO'
INTO METAL STRUCTURES

STEEL : 12 GA. MIN. (Fy = 36 KSI MIN.)
ALUMINUM : 1/8" THK. MIN. (6063-T5 MIN.)
(STEEL IN CONTACT WITH ALUMINUM TO BE PLATED OR PAINTED)

TYPE C: #14 SMS
INTO APPROVED MULLIONS (NO SHIM SPACE)

TYPICAL EDGE DISTANCE

INTO CONCRETE AND MASONRY = 3" MIN.
INTO WOOD STRUCTURE = 1-1/4" MIN.
INTO METAL STRUCTURE = 1" MIN.

PRODUCT RENEWED
as complying with the Florida
Building Code
Acceptance No 07-1010.01
Expiration Date JAN 08, 2014
By Ishaq I. Chanda
Miami Dade Product Control
Division

## SEALANTS:

FRAME AND PANEL CORNERS SEALED WITH
TREMCO SPECTRUM 2 OR G.E. SILGLAZE SEALANT.

Engr: YIPING WANG
STRUCTURES
FLA. PE # 55983
C.A.N. 3538

JAN 16 2008

AL-FAROOQ CORPORATION
ENGINEERS & PRODUCT DEVELOPMENT
1235 S.W. 87 AVE
MIAMI, FLORIDA 33174
TEL. (305) 264-8100 FAX. (305) 262-6978

COMP-ANL\W03-66YKK

YSD700 ALUMINUM SLIDING GLASS DOOR (N.I.)

YKK AP AMERICA INC.
332 FIRETOWER ROAD
DUBLIN, GEORGIA 31021
TEL.(478) 277-1955 FAX(478) 277-1978

| revisions: | | | |
|---|---|---|---|
| no | date | by | description |
| C | 06.08.07 | | UPDATED FOR 2004 FBC |
| D | 01.12.08 | | REV. PER BCCO COMMENTS |

date: 08-14-03
scale: 3/8" = 1"
dr. by: HAMID
chk. by:

drawing no.
W03-66

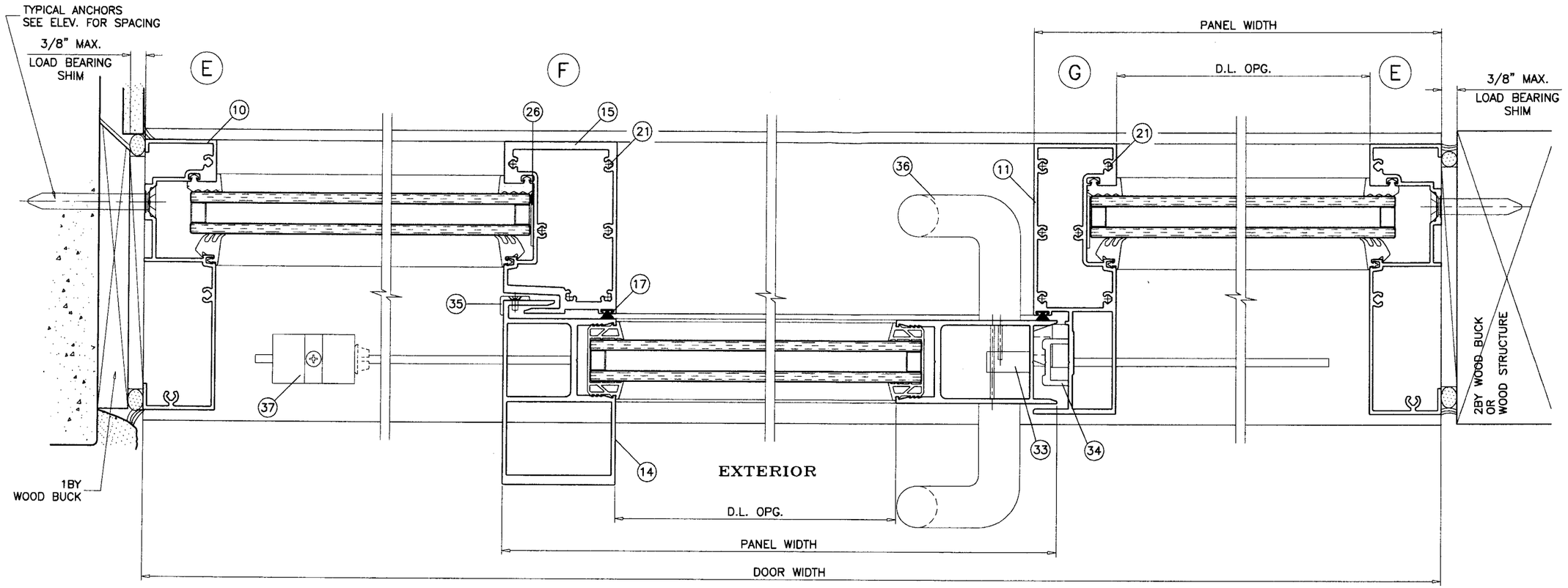


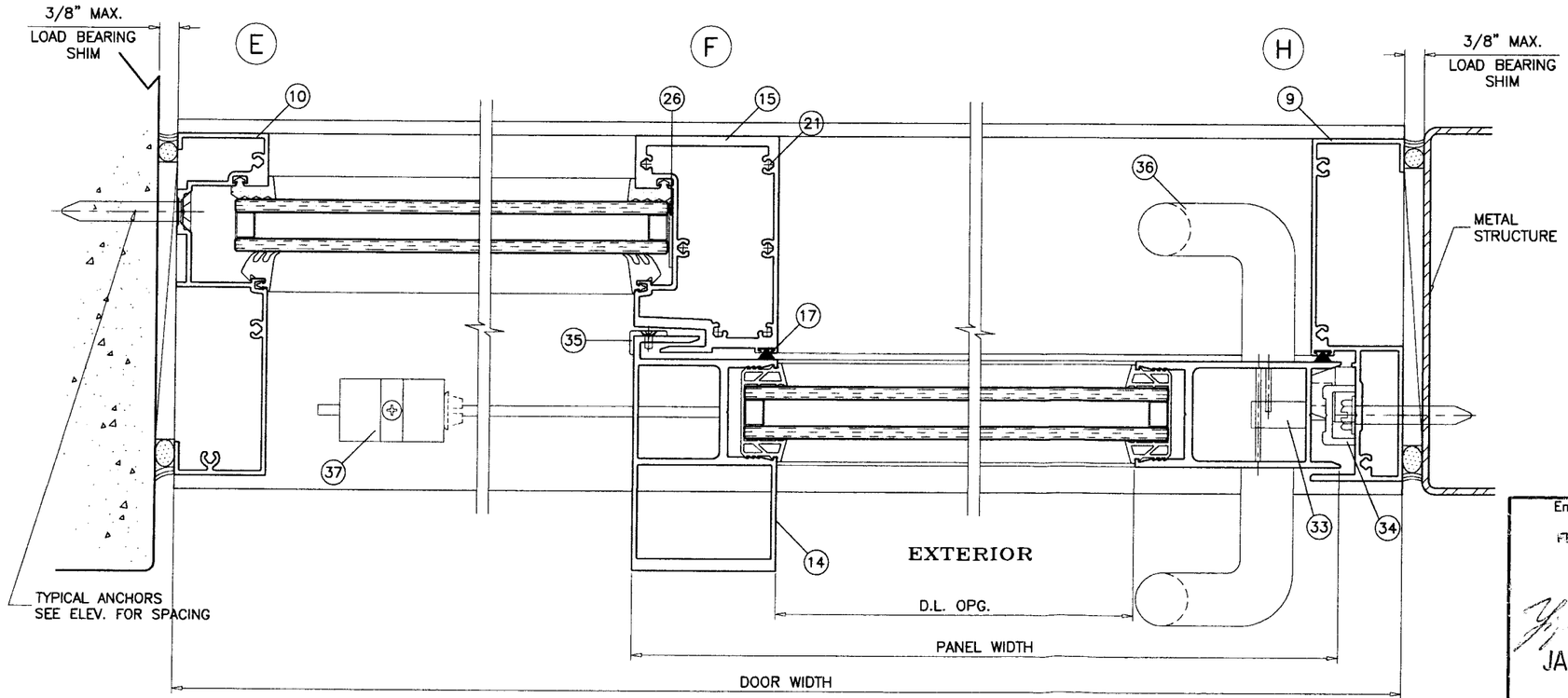


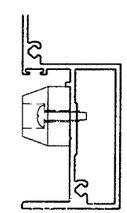

PRODUCT RENEWED
as complying with the Florida
Building Code
Acceptance No. 07-1010.01
Expiration Date JAN 08, 2014
By Ishaq I. Chanda
Miami Dade Product Control
Division

Engr: YIPING WANG
STRUCTURES
FLA. PE # 55983
C.A.N. 3538

JAN 16 2008


AL-FAROOQ CORPORATION
ENGINEERS & PRODUCT DEVELOPMENT
1235 S.W. 87 AVE
MIAMI, FLORIDA 33174
TEL. (305) 264-8100 FAX. (305) 262-6978
COMP-ANL\W03-66YKK


YSD700 ALUMINUM SLIDING GLASS DOOR (N.I.)


YKK AP AMERICA INC.
332 FIRETOWER ROAD
DUBLIN, GEORGIA 31021
TEL.(478) 277-1955 FAX(478) 277-1978


revisions:

| no | date | by | description |
|---|---|---|---|
| A | 10.31.03 | | REV. PER BCCO COMMENTS |
| B | 02.16.04 | | OXXO DOOR ADD. |
| C | 06.08.07 | | UPDATED FOR 2004 FBC |
| D | 01.12.08 | | REV. PER BCCO COMMENTS |

date: 08-14-03
scale: 3/8" = 1"
dr. by: HAMID
chk. by:

drawing no.
W03-66

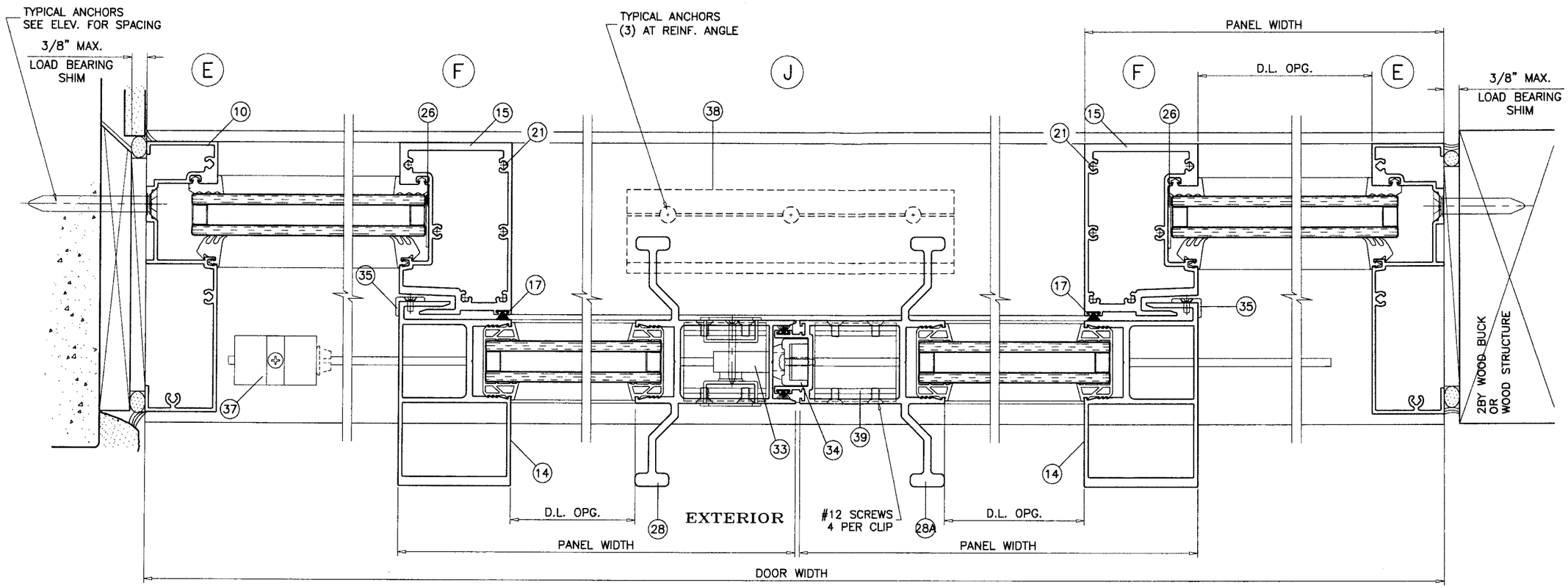


PRODUCT RENEWED
as complying with the Florida
Building Code
Acceptance No. 07-1010.01
Expiration Date JAN 09, 2014
By Ishaq I. Chanda
Miami-Dade Product Control
Division

Engr: YIPING WANG
STRUCTURES
FLA. PE # 55983
C.A.N. 3538

JAN 16 2008

**AL-FAROOQ CORPORATION**
ENGINEERS & PRODUCT DEVELOPMENT
1235 S.W. 87 AVE
MIAMI, FLORIDA 33174
TEL. (305) 264-8100 FAX. (305) 262-6978
COMP-ANL\W03-66YKK

YSD700 ALUMINUM SLIDING GLASS DOOR (N.I.)

**YKK AP AMERICA INC.**
332 FIRETOWER ROAD
DUBLIN, GEORGIA 31021
TEL.(478) 277-1955 FAX(478) 277-1978

revisions:

| no | date | by | description |
|---|---|---|---|
| A | 10.31.03 | | REV. PER BCCO COMMENTS |
| B | 02.16.04 | | OXXO DOOR ADD. |
| C | 06.08.07 | | UPDATED FOR 2004 FBC |
| D | 01.12.08 | | REV. PER BCCO COMMENTS |

date: 08-14-03
scale: 3/8" = 1"
dr. by: HAMID
chk. by:

drawing no.
W03-66

sheet 6 of 8

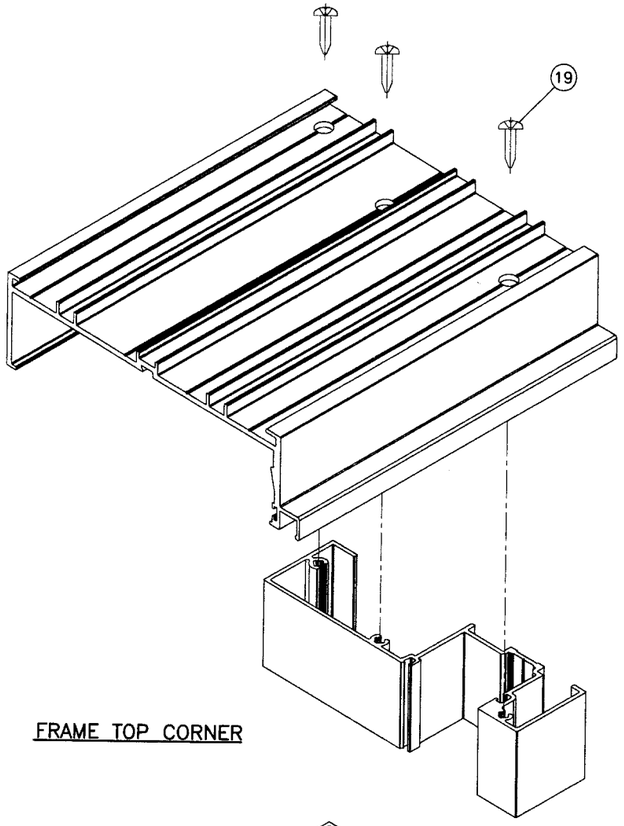


FRAME TOP CORNER

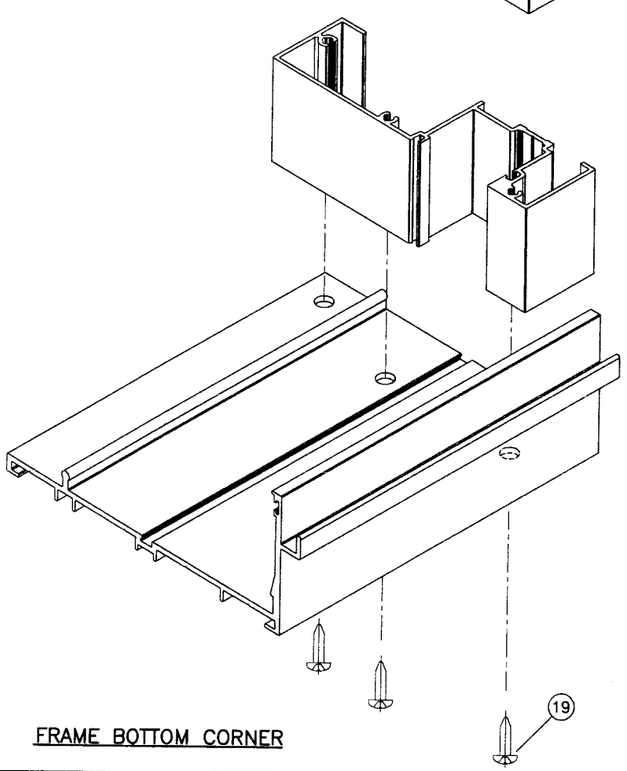


FRAME BOTTOM CORNER

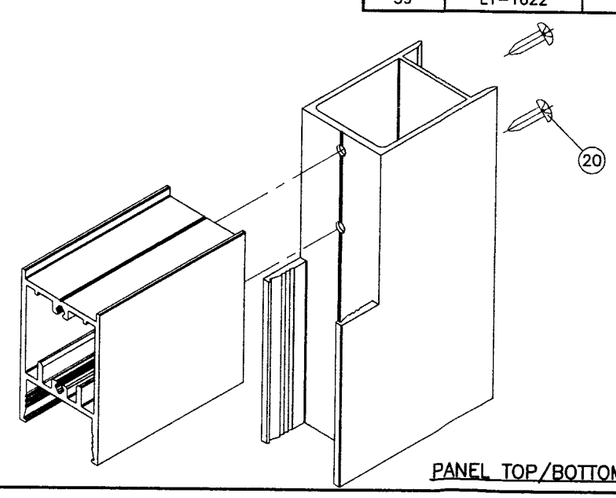


PANEL TOP/BOTTOM CORNER

| ITEM # | PART # | QUANTITY | DESCRIPTION | MATERIAL | MANF./SUPPLIER/REMARKS |
|---|---|---|---|---|---|
| 1 | E9-6126 | 1 | FRAME HEAD | 6063-T5 | YKK AP AMERICA |
| 2 | E9-6110 | 1 | HEAD ADAPTER (OPERABLE) | 6063-T5 | YKK AP AMERICA |
| 3 | E9-6107 | AS REQD. | HEAD ADAPTER (FIXED) | 6063-T5 | YKK AP AMERICA |
| 4 | E9-6115 | 1 | HEAD ADAPTER (EXTERIOR) | 6063-T5 | YKK AP AMERICA |
| 5 | E9-6109 | AS REQD. | GLASS STOP | 6063-T5 | YKK AP AMERICA |
| 6 | E9-6127 | 1 | FRAME SILL | 6063-T5 | YKK AP AMERICA |
| 7 | E9-6111 | 1 | SILL ADAPTER (OPERABLE) | 6063-T5 | YKK AP AMERICA |
| 8 | E9-6108 | AS REQD. | SILL ADAPTER (FIXED) | 6063-T5 | YKK AP AMERICA |
| 9 | E9-6104 | AS REQD. | FRAME JAMB (OPERABLE) | 6063-T5 | YKK AP AMERICA |
| 10 | E9-6103 | 1 | FRAME JAMB (FIXED) | 6063-T5 | YKK AP AMERICA |
| 11 | E9-6106 | 1 | ASTRAGAL STILE | 6063-T5 | YKK AP AMERICA |
| 12 | E9-6112 | 2/ PANEL | TOP & BOTTOM RAIL | 6063-T5 | YKK AP AMERICA |
| 13 | E9-6114 | 1 | JAMB STILE | 6063-T5 | YKK AP AMERICA |
| 14 | E9-6113 | AS REQD. | INTERLOCK (OPERABLE) | 6063-T5 | YKK AP AMERICA |
| 15 | E9-6105 | 1 | INTERLOCK (FIXED) | 6063-T5 | YKK AP AMERICA |
| 16 | E1-1619 | 2 | SETTING BLOCK CHAIR, 4" LONG | 6063-T5 | YKK AP AMERICA |
| 17 | E2-0712 | AS REQD. | PILE W'STRIPPING WITH FIN | – | – |
| 18 | E2-0051 | AS REQD. | 5/16" DIA. BULB W'STRIPPING | – | – |
| 19 | #12 X 1-1/4" | 3/ CORNER | FRAME ASSEMBLY SCREWS | ST. STEEL | PH SMS |
| 20 | #12 X 1-1/4" | 2/ CORNER | PANEL ASSEMBLY SCREWS | ST. STEEL | PH SMS |
| 21 | #12 X 1-1/4" | 6/ END | ASTRAGAL/FIX. I'LOCK. ASSY. SCREWS | ST. STEEL | PH TS |
| 22 | E2-0177 | AS REQD. | OPER. PANEL SETTING BLOCK | – | – |
| 23 | E2-0178 | AS REQD. | FIX. PANEL SETTING BLOCK | – | – |
| 24 | E2-0731 | AS REQD. | OPER. PANEL GLAZING GASKET | – | – |
| 25 | E2-0081 | AS REQD. | FIX. PANEL GLAZING GASKET | – | – |
| 26 | E2-0733 | AS REQD. | SIDE BLOCK | – | – |
| 27 | E2-0088 | AS REQD. | FIX. PANEL GLAZING SPACER | – | – |
| 28 | E9-6117 | 1 | FEMALE LOCK STILE | 6063-T5 | YKK AP AMERICA |
| 28A | E9-6116 | 1 | MALE LOCK STILE | 6063-T5 | YKK AP AMERICA |
| 29 | E1-1601 | 1 | SILL TRACK COVER | ST. STEEL | – |
| 30 | E3-1162 | 2/ MOV. PANEL | FIX. PANEL STOP | POLYAMIDE 6 | SECURED W/ (2) #8 X 1/2" PH TS |
| 31 | E1-1605 | 2/ MOV. PANEL | MOV. PANEL BLOCK | 6063-T5 | SECURED W/ (2) #8 X 1/2" PH TS |
| 32 | E1-1620 | 2/ MOV. PANEL | BALL BEARING ROLLER | ST. STEEL | – |
| 33 | MS-1850 | 1/ MOV. PANEL | MS LOCK ADAMS RITE | | SECURED W/ (2) #10 FH SMS |
| 34 | E1-1618 | 1/ MOV. PANEL | STRIKE | – | SECURED W/ (2) #10 X 1-1/4" PH TS |
| 35 | E3-1161 | 1/ MOV. PANEL | PANEL GUIDE | POLYAMIDE 6 | SECURED W/ #8 X 1/2" PH TS |
| 36 | H1302 | 1 | PULL HANDLE | – | – |
| 37 | E2-0709 | 1/ MOV. PANEL | SILL BUMPER | – | SECURED W/ #10 X 1-1/4" PH TS |
| 38 | E1-1623 | AS REQD. | REINFORCING ANGLE | 6063-T5 | AT OXXO DOORS ONLY |
| 39 | E1-1622 | AS REQD. | REINFORCING CLIP AT SILL LOCATION | 6063-T5 | AT OXXO DOORS ONLY |

YKK EXTRUDED ALUMINUM ALLOY 6063-T5
Fy (MIN) = 13,940 PSI
Fes (BEARING) = 29,440 PSI

**PRODUCT RENEWED**
**as complying with the Florida Building Code**
**Acceptance No.** 07-1010.01
**Expiration Date** JAN 08, 2014
**By** Shaq J. Chanda
**Miami Dade Product Control Division**

Engr: YIPING WANG
STRUCTURES
FLA. PE # 55983
C.A.N. 3538

JAN 16 2008


**AL-FAROOQ CORPORATION**
ENGINEERS & PRODUCT DEVELOPMENT
1235 S.W. 87 AVE
MIAMI, FLORIDA 33174
TEL. (305) 264-8100 FAX. (305) 262-6978


COMP-ANL\W03-66YKK

YSD700 ALUMINUM SLIDING GLASS DOOR (N.I.)


YKK ap
YKK AP AMERICA INC.
332 FIRETOWER ROAD
DUBLIN, GEORGIA 31021
TEL.(478) 277-1955 FAX(478) 277-1978


revisions:

| no | date | by | description |
|---|---|---|---|
| A | 10.31.03 | | REV. PER BCCO COMMENTS |
| B | 02.16.04 | | OXXO DOOR ADD. |
| C | 06.08.07 | | UPDATED FOR 2004 FBC |
| D | 01.12.08 | | REV. PER BCCO COMMENTS |

date: 08-14-03
scale: 3/8" = 1"
dr. by: HAMID
chk. by:

drawing no.
W03-66

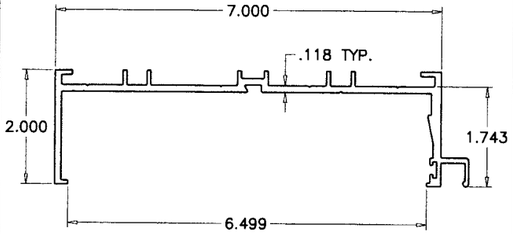

FRAME HEAD

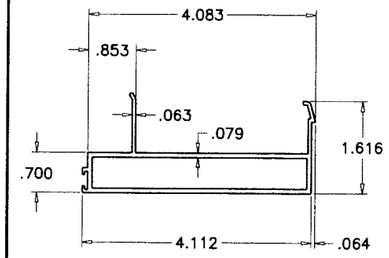

HEAD ADAPTER (OPERABLE)

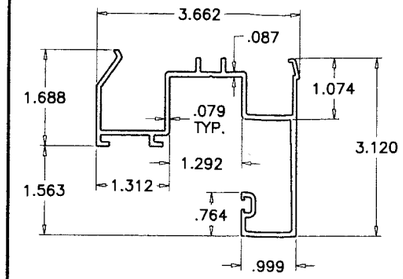

HEAD ADAPTER (FIXED)

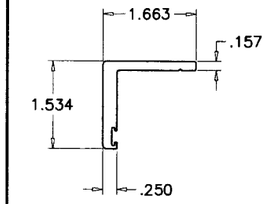

HEAD ADAPTER (EXTERIOR)

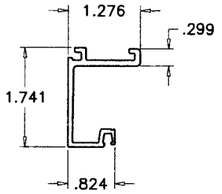

GLASS STOP HEAD

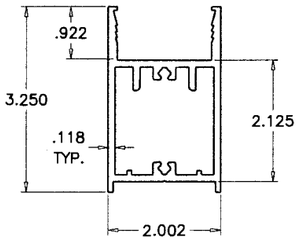

TOP & BOTTOM RAIL

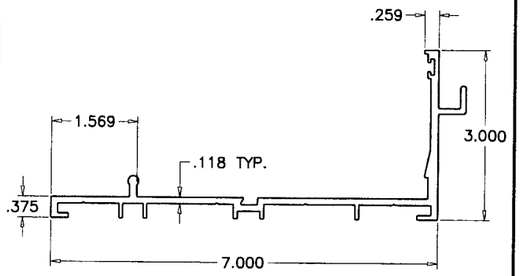

FRAME SILL

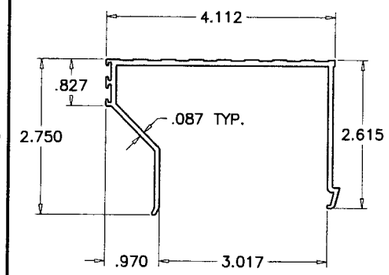

SILL ADAPTER (OPERABLE)

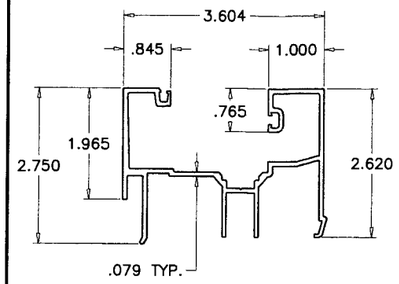

SILL ADAPTER (FIXED)

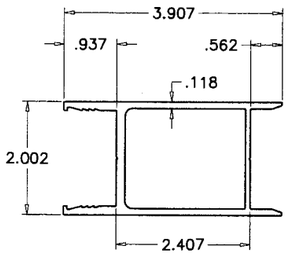

JAMB STILE

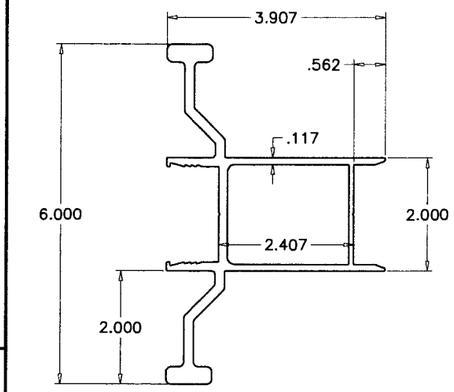

FEMALE LOCK STILE

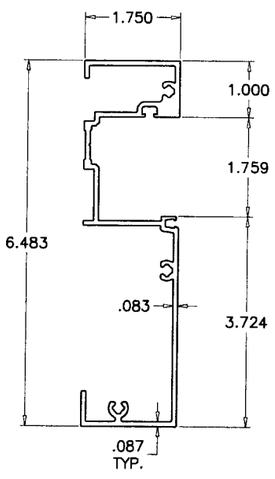

FRAME JAMB (FIXED)

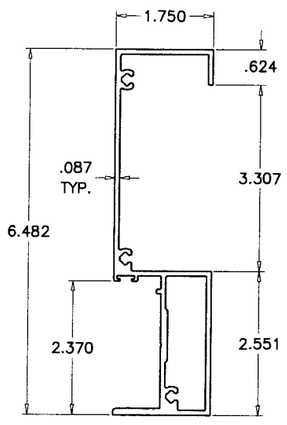

FRAME JAMB (OPERABLE)

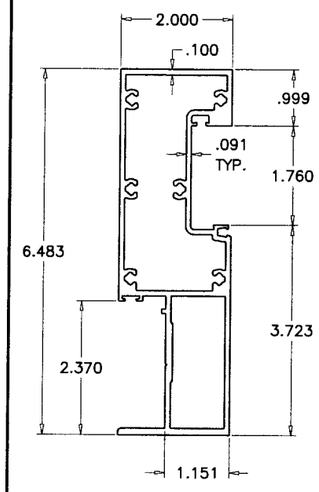

ASTRAGAL STILE

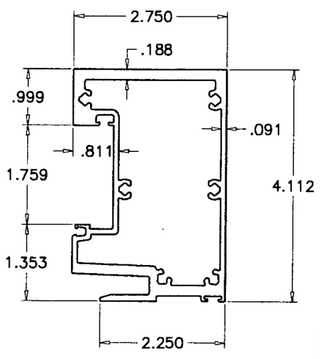

INTERLOCK (FIXED)

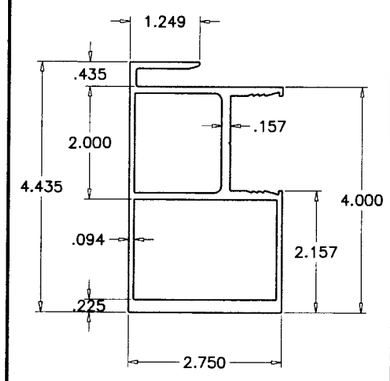

INTERLOCK (OPERABLE)

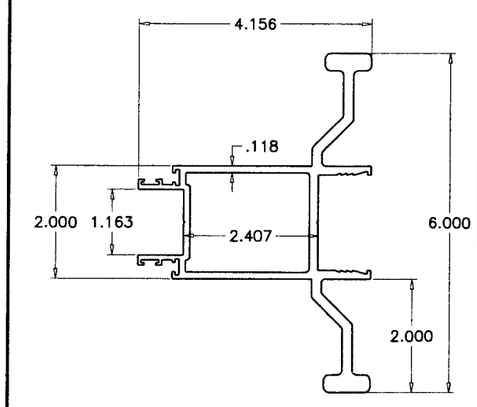

MALE LOCK STILE

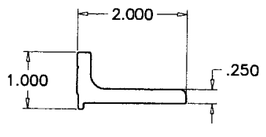

REINFORCING ANGLE

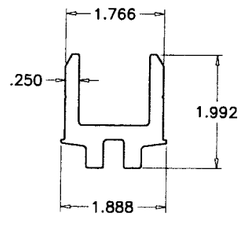

REINFORCING CLIP

Engr: YIPING WANG
STRUCTURES
FLA. PE # 55983
C.A.N. 3538

JAN 16 2008

**PRODUCT RENEWED**
as complying with the Florida Building Code
Acceptance No 07-1010.01
Expiration Date JAN 03, 2014
By Ishaq I. Chanda
Miami Dade Product Control Division

**AL-FAROOQ CORPORATION**
ENGINEERS & PRODUCT DEVELOPMENT
1235 S.W. 87 AVE
MIAMI, FLORIDA 33174
TEL. (305) 264-8100 FAX. (305) 262-6978
COMP-ANL\W03-66YKK

YSD700 ALUMINUM SLIDING GLASS DOOR (N.I.)

YKK ap®
YKK AP AMERICA INC.
332 FIRETOWER ROAD
DUBLIN, GEORGIA 31021
TEL.(478) 277-1955 FAX(478) 277-1978

revisions:

| no | date | by | description |
|---|---|---|---|
| A | 10.31.03 | | REV. PER BCCO COMMENTS |
| B | 02.16.04 | | OXXO DOOR ADD. |
| C | 06.08.07 | | UPDATED FOR 2004 FBC |
| D | 01.12.08 | | NO CHANGE THIS SHEET |

date: 08-14-03
scale: 3/8" = 1"
dr. by: HAMID
chk. by:

drawing no.
W03-66

sheet 8 of 8