MIAMI-DADE

BUILDING CODE COMPLIANCE OFFICE (BCCO)
PRODUCT CONTROL DIVISION

MIAMI-DADE COUNTY, FLORIDA
METRO-DADE FLAGLER BUILDING
140 WEST FLAGLER STREET, SUITE 1603

MIAMI, FLORIDA 33130-1563
(305) 375-2901 FAX (305) 375-2908

NOTICE OF ACCEPTANCE (NOA)

Uralita Tejados, S.A.
P.O. Box # 12
03080, Alicante, Spain

SCOPE:

This NOA is being issued under the applicable rules and regulations governing the use of construction materials. The documentation submitted has been reviewed by Miami-Dade County Product Control Division and accepted by the Board of Rules and Appeals (BORA) to be used in Miami Dade County and other areas where allowed by the Authority Having Jurisdiction (AHJ).

This NOA shall not be valid after the expiration date stated below. The Miami-Dade County Product Control Division (In Miami Dade County) and/or the AHJ (in areas other than Miami Dade County) reserve the right to have this product or material tested for quality assurance purposes. If this product or material fails to perform in the accepted manner, the manufacturer will incur the expense of such testing and the AHJ may immediately revoke, modify, or suspend the use of such product or material within their jurisdiction. BORA reserves the right to revoke this acceptance, if it is determined by Miami-Dade County Product Control Division that this product or material fails to meet the requirements of the applicable building code.

This product is approved as described herein, and has been designed to comply with the High Velocity Hurricane Zone of the Florida Building Code.
DESCRIPTION: COBERT Clay Spanish "S" Cazorla

LABELING: Each unit shall bear a permanent label with the manufacturer's name or logo, city, state and following statement: "Miami-Dade County Product Control Approved", unless otherwise noted herein.
RENEWAL of this NOA shall be considered after a renewal application has been filed and there has been no change in the applicable building code negatively affecting the performance of this product.
TERMINATION of this NOA will occur after the expiration date or if there has been a revision or change in the materials, use, and/or manufacture of the product or process. Misuse of this NOA as an endorsement of any product, for sales, advertising or any other purposes shall automatically terminate this NOA. Failure to comply with any section of this NOA shall be cause for termination and removal of NOA.
ADVERTISEMENT: The NOA number preceded by the words Miami-Dade County, Florida, and followed by the expiration date may be displayed in advertising literature. If any portion of the NOA is displayed, then it shall be done in its entirety.
INSPECTION: A copy of this entire NOA shall be provided to the user by the manufacturer or its distributors and shall be available for inspection at the job site at the request of the Building Official.

This revises NOA 07-0629.02 consists of pages 1 through 4.
The submitted documentation was reviewed by Alex Tigera.

ROOFING ASSEMBLY APPROVAL

Category: Roofing
Sub Category: Roofing Tiles
Material: Clay

1. SCOPE

This new roofing system using COBERT Clay Spanish "S" Cazorla Roof Tile, as manufactured by URALITA Tejados, S.A. in **Alicante, Spain** and distributed by Zion Tile Corporation as described in Section 2 of this Notice of Acceptance, designed to comply with the South Florida Building Code, 1994 Edition for Miami-Dade County. For the locations where the pressure requirements, do not exceed the design pressure values obtain by calculations in compliance with RAS 127 using the values listed in section 4 herein. The attachment calculations shall be done as a moment based system.

2. PRODUCT DESCRIPTION

Manufactured by Applicant	Dimensions	Test Specifications	Product Description
COBERT Clay Spanish "S" Cazorla	l = 18" w = 11-$^{1}/_{8}$" ½" thick	ASTM C 1167	High profile interlocking, clay tile.
Trim Pieces	Length: varies Width: varies varying thickness	ASTM C 1167	Accessory trim, clay roof pieces for use at hips, rakes, ridges and valley terminations.

2.1 SUBMITTED EVIDENCE:

Test Agency	Test Identifier	Test Name/Report	Date
All State Engineering & Testing Consultants, Inc.	AV-27	TAS-101	January 1999
IBA Consultants, Inc.	2354-186	Physical Properties ASTM C 1167	04/13/07

3. LIMITATIONS

3.1 Fire classification is not part of this acceptance.

3.2 For mortar or adhesive set tile applications, a static field uplift test shall be performed in accordance with RAS 106.

3.3 Applicant shall retain the services of a Miami-Dade County Certified Laboratory to perform quarterly test in accordance with PA 112, appendix 'A'. Such testing shall be submitted to the Building Code Compliance Office for review.

3.4 Minimum underlayment shall be in compliance with the applicable Roofing Applications Standards listed section 4.1 herein.

3.5 30/90 hot mopped underlayment applications may be installed perpendicular to the roof slope unless stated otherwise by the underlayment material manufacturers published literature.

3.6 This acceptance is for wood deck applications. Minimum deck requirements shall be in compliance with applicable building code.

4. INSTALLATION

4.1 COBERT Clay Spanish "S" Cazorla tile and its components shall be installed in strict compliance with Roofing Application Standard RAS 120.

4.2 Data For Attachment Calculations

Table 1: Average Weight (W) and Demensions (l x w) From PA 101 Testing

TileProfile	Weight-W (lbf)	Length-l (ft	Width-w (ft)
COBERT Clay Spanish "S" Cazorla (Adhesive Set)	8.2	1.5	0.927

Table 2: Aerodynamic Multipliers - λ (ft^3)

Tile Profile	λ (ft^3) Direct Deck Application
COBERT Clay Spanish "S" Cazorla (Adhesive Set)	0.27

Table 3: Restoring Moments due to Gravity - M_g (ft-lbf)

Tile Profile	2":12" Direct Deck	3":12" DirectDeck	4":12" Direct Deck	5":12" Direct Deck	6":12" Direct Deck	7":12" Direct Deck
COBERT Clay Spanish "S" Cazorla (Adhesive Set)	6.01	5.93	5.83	5.70	5.55	5.39

Table 4: Attachment Resistance Expressed as a Moment - M_f (ft-lbf) for Adhesive Set Systems

Tile Profile	Tile Application	Attachment Resistance
COBERT Clay Spanish "S" Cazorla (Adhesive Set)	Adhesive Set[1]	82.54[1]

[1]Avg. patty weight 131.5grams of Polyfoam Polypro® AH160.

5. **LABELING**

All tiles shall bear the imprint or identifiable marking of the manufacturer's name or logo **(See Detail Below)**, or following statement: "Miami-Dade County Product Control Approved".

COBERT

URALITA TEJADOS TOLEDO-E

OR

COBERT

LUSOCERAN OUTEIRO-P

COBERT CLAY SPANISH "S" CAZORLA LABEL
(LOCATED ON UNDERSIDE OF TILE)

6. **BUILDING PERMIT REQUIREMENTS**

6.1 Application for building permit shall be accompanied by copies of the following:

6.1.1 This Notice of Acceptance.

6.1.2 Any other documents required by the Building Official or applicable building code in order to properly evaluate the installation of this system.

PROFILE DRAWINGS

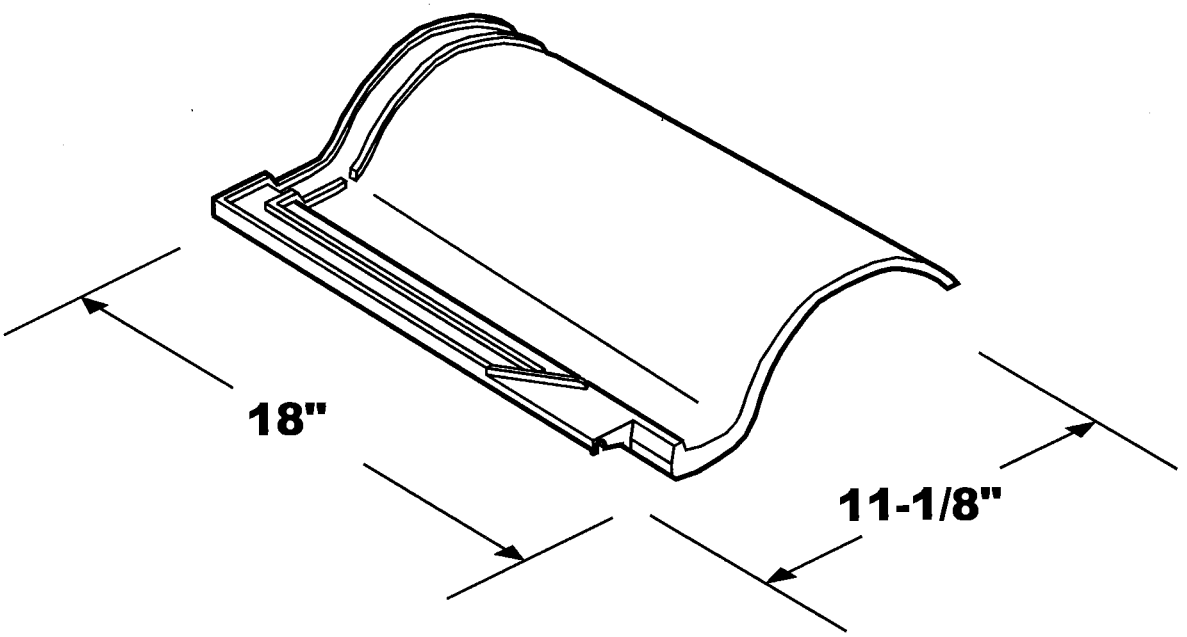

COBERT CLAY SPANISH "S" CAZORLA
END OF THIS ACCEPTANCE