MIAMI-DADE COUNTY, FLORIDA
METRO-DADE FLAGLER BUILDING
140 WEST FLAGLER STREET, SUITE 1603
MIAMI, FLORIDA 33130-1563
(305) 375-2901 FAX (305) 375-2908
www.buldingcodeonline.com

BUILDING CODE COMPLIANCE OFFICE (BCCO)
PRODUCT CONTROL DIVISION

NOTICE OF ACCEPTANCE (NOA)

Andersen Corporation
100 Fourth Avenue North
Bayport, MN 55003

SCOPE:

This NOA is being issued under the applicable rules and regulations governing the use of construction materials. The documentation submitted has been reviewed by Miami-Dade County Product Control Division and accepted by the Board of Rules and Appeals (BORA) to be used in Miami Dade County and other areas where allowed by the Authority Having Jurisdiction (AHJ).

This NOA shall not be valid after the expiration date stated below. The Miami-Dade County Product Control Division (In Miami Dade County) and/or the AHJ (in areas other than Miami Dade County) reserve the right to have this product or material tested for quality assurance purposes. If this product or material fails to perform in the accepted manner, the manufacturer will incur the expense of such testing and the AHJ may immediately revoke, modify, or suspend the use of such product or material within their jurisdiction. BORA reserves the right to revoke this acceptance, if it is determined by Miami-Dade County Product Control Division that this product or material fails to meet the requirements of the applicable building code.

This product is approved as described herein, and has been designed to comply with the Florida Building Code, including the High Velocity Hurricane Zone.

DESCRIPTION: Laminated Veneered Lumber (LVL) Clipped Wood Mullion System – L.M.I.

APPROVAL DOCUMENT: Drawing No. **M05-01**, titled "Laminated Veneered Lumber Mullion System", sheets 1 through 12 of 12, dated 08/15/05, prepared by Al-Farooq Corporation, signed and sealed by Humayoun Farooq, P.E., bearing the Miami-Dade County Product Control Approval stamp with the Notice of Acceptance number and approval date by the Miami-Dade County Product Control Division.

MISSILE IMPACT RATING: Large and Small Missile Impact Resistant

LABELING: Each unit shall bear a permanent label with the manufacturer's name or logo, city, state and following statement: "Miami-Dade County Product Control Approved", unless otherwise noted herein.

RENEWAL of this NOA shall be considered after a renewal application has been filed and there has been no change in the applicable building code negatively affecting the performance of this product.

TERMINATION of this NOA will occur after the expiration date or if there has been a revision or change in the materials, use, and/or manufacture of the product or process. Misuse of this NOA as an endorsement of any product, for sales, advertising or any other purposes shall automatically terminate this NOA. Failure to comply with any section of this NOA shall be cause for termination and removal of NOA.

ADVERTISEMENT: The NOA number preceded by the words Miami-Dade County, Florida, and followed by the expiration date may be displayed in advertising literature. If any portion of the NOA is displayed, then it shall be done in its entirety.

INSPECTION: A copy of this entire NOA shall be provided to the user by the manufacturer or its distributors and shall be available for inspection at the job site at the request of the Building Official.

This NOA consists of this page 1 and evidence page E-1, as well as approval document mentioned above.

The submitted documentation was reviewed by **Manuel Perez, P.E.**

Andersen Corporation

NOTICE OF ACCEPTANCE: EVIDENCE SUBMITTED

A. DRAWINGS

1. Manufacturer's die drawings and sections.
2. Drawing No **M05-01**, Sheets 1 through 12 of 12, titled "Laminated Veneered Lumber Mullion System", dated 08/15/05, prepared by Al-Farooq Corporation, signed and sealed by Humayoun Farooq, P.E.

B. TESTS

1. Test reports on: 1) Uniform Static Air Pressure Test, Loading per FBC TAS 202-94
   2) Large Missile Impact Test per FBC, TAS 201-94
   3) Cyclic Wind Pressure Loading per FBC, TAS 203-94

   along with marked-up drawings and installation diagram of six LVL structural mulled assemblies,(per Testing Proposal #06-0072), prepared by Architectural Testing, Inc. Test Report No. **ATI-65617.01-201-18**, dated 11/29/06, signed and sealed by Joseph A. Reed, P.E.

C. CALCULATIONS

1. Anchor verification calculations and structural analysis, complying with FBC-2004, prepared by Al-Farooq Corporation, dated 02/22/07, signed and sealed by Humayoun Farooq, P.E.

D. QUALITY ASSURANCE

1. Miami Dade Building Code Compliance Office (BCCO).

E. MATERIAL CERTIFICATIONS

1. None.

F. STATEMENTS

1. Statement letter of conformance, dated February 22, 2007, signed and sealed by Humayoun Farooq, P.E.
2. Statement letter of no financial interest, dated February 22, 2007, signed and sealed by Humayoun Farooq, P.E.

G. OTHER

1. None.

Manuel Perez, P.E.
Product Control Examiner
NOA No. 07-1025.08
Expiration Date: December 20, 2012
Approval Date: December 20, 2007

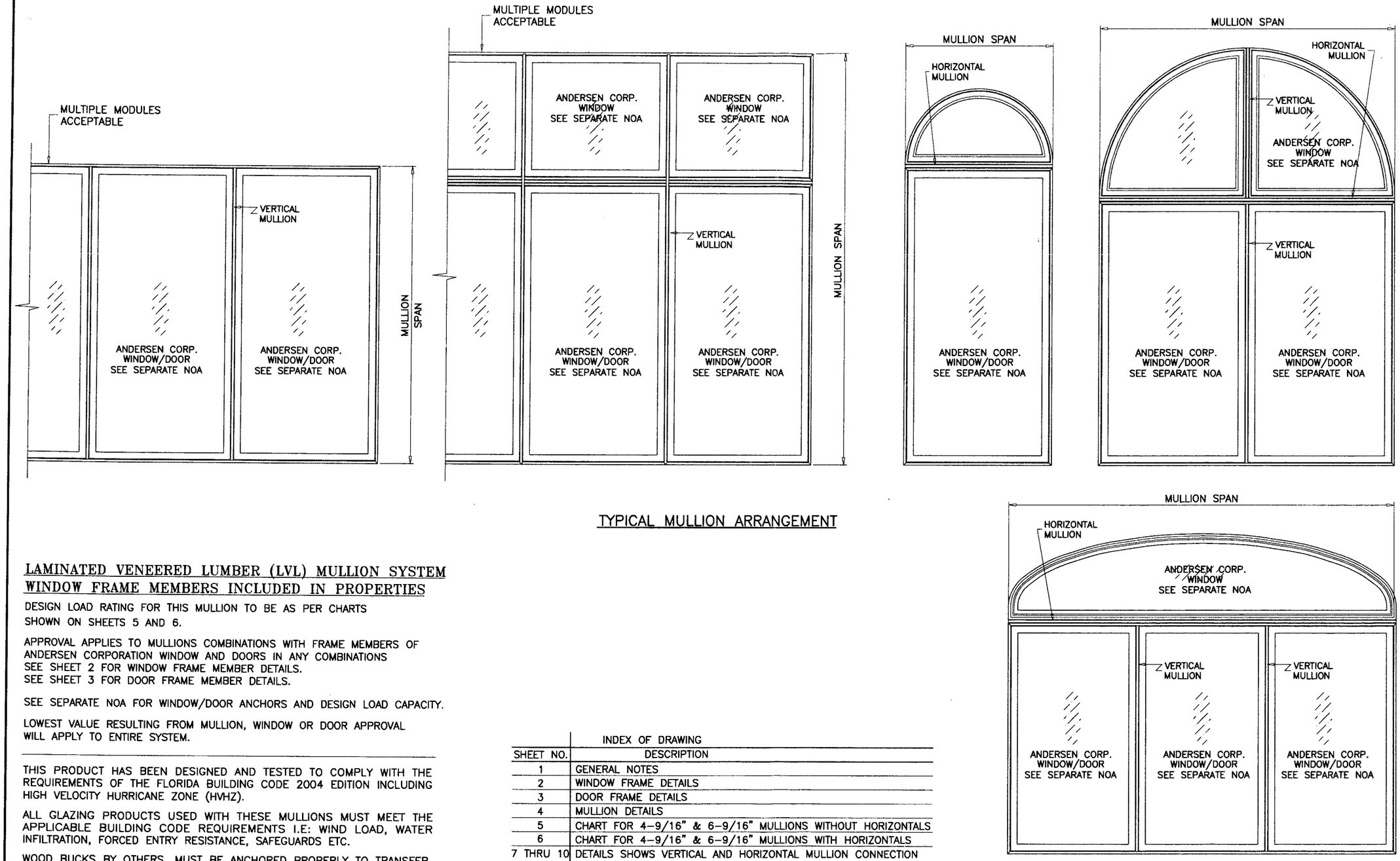

TYPICAL MULLION ARRANGEMENT

LAMINATED VENEERED LUMBER (LVL) MULLION SYSTEM WINDOW FRAME MEMBERS INCLUDED IN PROPERTIES

DESIGN LOAD RATING FOR THIS MULLION TO BE AS PER CHARTS SHOWN ON SHEETS 5 AND 6.

APPROVAL APPLIES TO MULLIONS COMBINATIONS WITH FRAME MEMBERS OF ANDERSEN CORPORATION WINDOW AND DOORS IN ANY COMBINATIONS
SEE SHEET 2 FOR WINDOW FRAME MEMBER DETAILS.
SEE SHEET 3 FOR DOOR FRAME MEMBER DETAILS.

SEE SEPARATE NOA FOR WINDOW/DOOR ANCHORS AND DESIGN LOAD CAPACITY.

LOWEST VALUE RESULTING FROM MULLION, WINDOW OR DOOR APPROVAL WILL APPLY TO ENTIRE SYSTEM.

THIS PRODUCT HAS BEEN DESIGNED AND TESTED TO COMPLY WITH THE REQUIREMENTS OF THE FLORIDA BUILDING CODE 2004 EDITION INCLUDING HIGH VELOCITY HURRICANE ZONE (HVHZ).

ALL GLAZING PRODUCTS USED WITH THESE MULLIONS MUST MEET THE APPLICABLE BUILDING CODE REQUIREMENTS I.E: WIND LOAD, WATER INFILTRATION, FORCED ENTRY RESISTANCE, SAFEGUARDS ETC.

WOOD BUCKS BY OTHERS, MUST BE ANCHORED PROPERLY TO TRANSFER LOADS TO THE STRUCTURE.

ANCHORS SHALL BE AS LISTED, SPACED AS SHOWN ON DETAILS, EMBEDMENT TO BASE MATERIAL SHALL BE BEYOND WALL COVERING (STUCCO, TILE ETC.).

ANCHORING CONDITIONS OTHER THAN THOSE SHOWN IN THESE DETAILS ARE NOT PART OF THIS APPROVAL.

A LOAD DURATION INCREASE IN ALLOWABLE STRESS IS USED IN DESIGN OF ANCHORS INTO WOOD ONLY.

MATERIALS INCLUDING BUT NOT LIMITED TO STEEL/METAL SCREWS, THAT COME INTO CONTACT WITH OTHER DISSIMILAR MATERIALS SHALL MEET THE REQUIREMENTS OF 2004 FLORIDA BLDG. CODE SECTION 2003.8.4.

INDEX OF DRAWING

SHEET NO.	DESCRIPTION
1	GENERAL NOTES
2	WINDOW FRAME DETAILS
3	DOOR FRAME DETAILS
4	MULLION DETAILS
5	CHART FOR 4-9/16" & 6-9/16" MULLIONS WITHOUT HORIZONTALS
6	CHART FOR 4-9/16" & 6-9/16" MULLIONS WITH HORIZONTALS
7 THRU 10	DETAILS SHOWS VERTICAL AND HORIZONTAL MULLION CONNECTION WITH FRAME MEMBERS.
11	HORIZ./VERT. MULLION CONNECTION DETAILS
12	VERT. MULLION CONNECTION DETAIL TO HORIZ. MULLION

MULLION SYSTEM IS RATED FOR LARGE MISSILE IMPACT. AND CAN BE USED WITH ALL MIAMI-DADE COUNTY APPROVED IMPACT AND NON-IMPACT RESISTANT PRODUCTS.

Engr: DR. HUMAYOUN FAROOQ
STRUCTURES
FLA. PE # 16557
C.A.N. 3538

SEP 22 2007

Approved as complying with the Florida Building Code
Date DEC. 20, 2007
NOA# 07-1025.08
Miami Dade Product Control Division
By: Manuel Perez

AL-FAROOQ CORPORATION
ENGINEERS & PRODUCT DEVELOPMENT
1235 S.W. 87 AVE
MIAMI, FLORIDA 33174
TEL. (305) 264-8100 FAX. (305) 262-6978

MULLION\M05-01AC

LAMINATED VENEERED LUMBER MULLION SYSTEM

ANDERSEN CORPORATION
100 FOURTH AVE. NORTH
BAYPORT, MN. 55003-1096
TEL. (800) 426-7691 FAX (-)

revisions:			
no	date	by	description

date: 08-15-05
scale: 3/8"=1'-0"
dr. by: HAMID
chk. by:

drawing no. M05-01

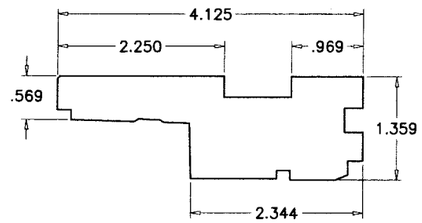

CASEMENT
FRAME HEAD/SILL
30835
WOOD

AWNING
FRAME JAMB
30836
WOOD

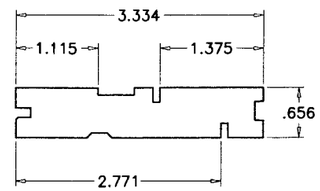

TILT-WASH DOUBLE HUNG
FRAME HEAD
–
WOOD

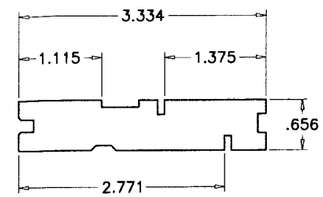

WOODWRIGHT DOUBLE HUNG
FRAME HEAD/JAMB
–
WOOD

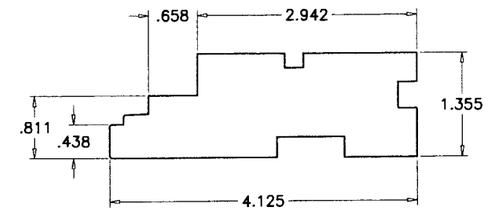

SPECIALITY DIRECT SET (CTC & CTQC)
FRAME SILL
27230
WOOD

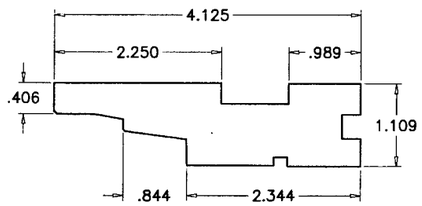

CASEMENT
FRAME JAMB
30838
WOOD

AWNING
FRAME HEAD/SILL
30838
WOOD

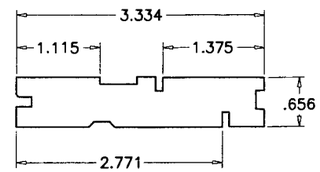

TILT-WASH DOUBLE HUNG
FRAME JAMB
–
WOOD

TILT-WASH FIXED
FRAME HEAD/SILL/JAMB
–
WOOD

WOODWRIGHT FIXED
FRAME HEAD/SILL/JAMB
–
WOOD

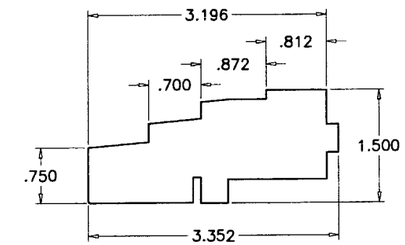

SPECIALITY DIRECT SET (CTN)
FRAME SILL
27122
WOOD

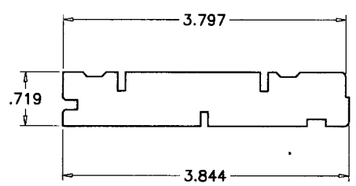

PSNL
FRAME HEAD/SILL/JAMB
–
WOOD

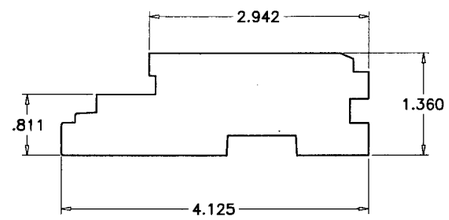

CASEMENT PICTURE
FRAME HEAD/SILL/JAMB
–
WOOD

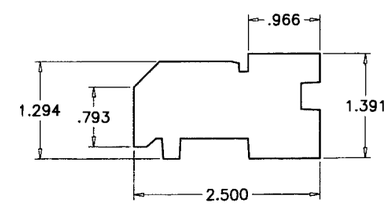

FLEXIFRAME FIXED
FRAME HEAD/SILL/JAMB
–
WOOD

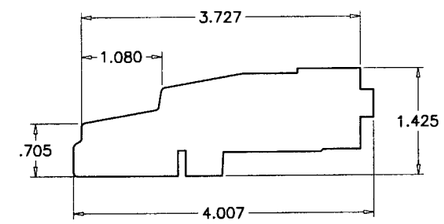

SPECIALITY DIRECT SET (ET)
FRAME SILL
53103
WOOD

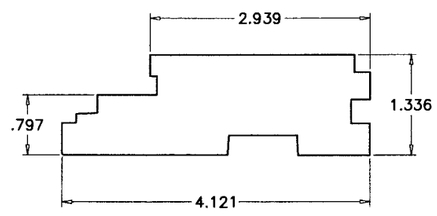

CASEMENT PICTURE (P)
FRAME HEAD/SILL/JAMB
30394
WOOD

Engr: DR. HUMAYOUN FAROOQ
STRUCTURES
FLA. PE # 16557
C.A.N. 3538

SEP 22 2007

Approved as complying with the Florida Buiding Code
Date DEC. 20, 2007
NOA# 07-1025.08
Miami Dade Product Control Division
By Manuel Perez

AL-FAROOQ CORPORATION
ENGINEERS & PRODUCT DEVELOPMENT
1235 S.W. 87 AVE
MIAMI, FLORIDA 33174
TEL. (305) 264-8100 FAX. (305) 262-6978

MULLION\M05-01AC

LAMINATED VENEERED LUMBER MULLION SYSTEM

ANDERSEN CORPORATION
100 FOURTH AVE. NORTH
BAYPORT, MN. 55003-1096
TEL. (800) 426-7691 FAX (-)

revisions:

no	date	by	description

date: 08-15-05
scale: 1/2" = 1"
dr. by: HAMID
chk. by:

drawing no.
M05-01

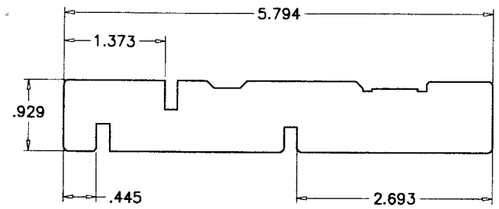

FWG
GLIDING DOOR FRAME HEAD
–
WOOD

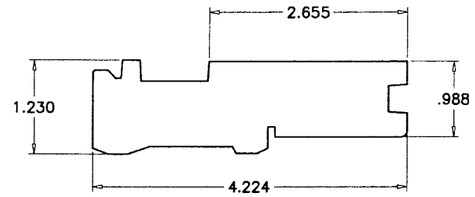

FWH
HINGED DOOR HEAD/JAMB (OPERATING/STATIONARY)
52253
WOOD

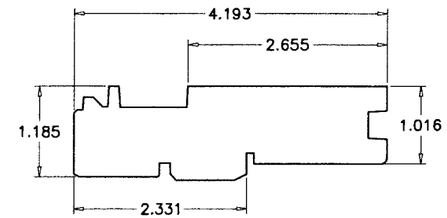

FWO
OUTSWING DOOR HEAD/JAMB (OPERATING/STATIONARY)
57019
WOOD

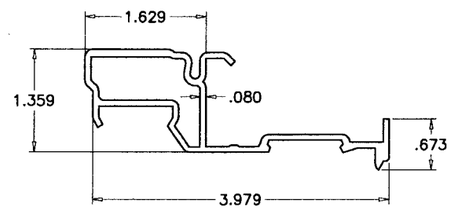

FWH
HINGED HEAD/JAMB COVER (OPERATING/STATIONARY)
52225
FIBERGLASS

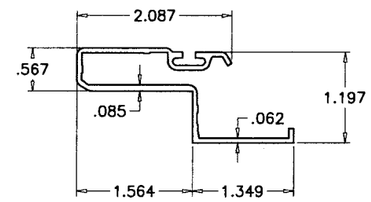

FWO
OUTSWING HEAD/JAMB COVER (OPERATING/STATIONARY)
57031
FIBERGLASS

Engr: DR. HUMAYOUN FAROOQ
STRUCTURES
FLA. PE # 16557
C.A.N. 3538

SEP 2 2 2007

Approved as complying with the
Florida Building Code
Date DEC. 20, 2007
NOA# 07-1025.08
Miami Dade Product Control
Division
By Manuel Perez

AL-FAROOQ CORPORATION
ENGINEERS & PRODUCT DEVELOPMENT
1235 S.W. 87 AVE
MIAMI, FLORIDA 33174
TEL. (305) 264-8100 FAX. (305) 262-6978

MULLION\M05-01AC

LAMINATED VENEERED LUMBER MULLION SYSTEM

ANDERSEN CORPORATION
100 FOURTH AVE. NORTH
BAYPORT, MN. 55003-1096
TEL. (800) 426-7691 FAX (–)

revisions:

no	date	by	description

date: 08-15-05
scale: 1/2" = 1"
dr. by: HAMID
chk. by:

drawing no.
M05-01

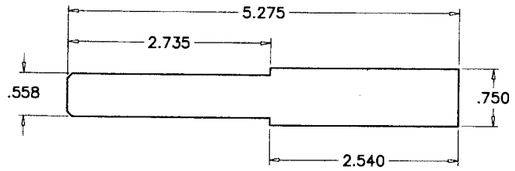

4–9/16" MULLION
–
LAMINATED VENEERED LUMBER

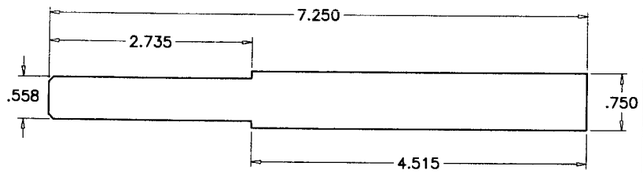

6–9/16" MULLION
–
LAMINATED VENEERED LUMBER

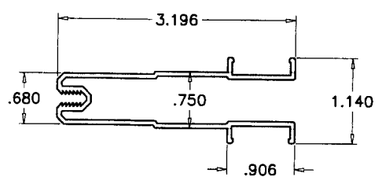

MULLION COVER
–
ALUMINUM

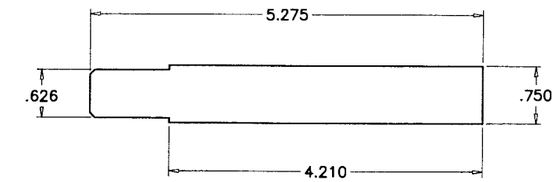

4–9/16" MULLION
29353
LAMINATED VENEERED LUMBER

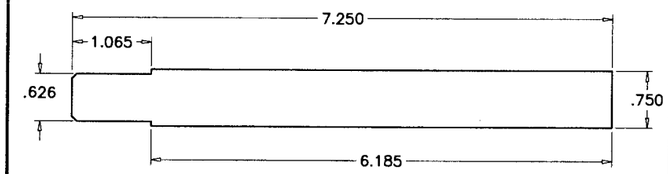

6–9/16" MULLION
29434
LAMINATED VENEERED LUMBER

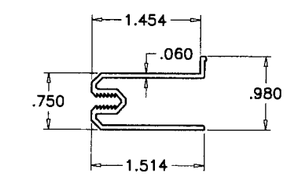

MULLION COVER
29351
ALUMINUM

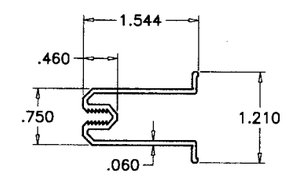

MULLION COVER
29351
ALUMINUM

Engr: DR. HUMAYOUN FAROOQ
STRUCTURES
FLA. PE # 16557
C.A.N. 3538

SEP 2 2 2007

Approved as complying with the
Florida Building Code
Date DEC. 20, 2007
NOA# 07-1025.08
Miami Dade Product Control
Division
By Manuel Sanz

AL-FAROOQ CORPORATION
ENGINEERS & PRODUCT DEVELOPMENT
1235 S.W. 87 AVE
MIAMI, FLORIDA 33174
TEL. (305) 264-8100 FAX. (305) 262-6978

MULLION\M05-01AC

LAMINATED VENEERED LUMBER MULLION SYSTEM

ANDERSEN CORPORATION
100 FOURTH AVE. NORTH
BAYPORT, MN. 55003-1096
TEL. (800) 426-7691 FAX (-)

revisions:

no	date	by	description

date: 08-15-05
scale: 1/2" = 1"
dr. by: HAMID
chk. by:

drawing no.
M05-01

DESIGN LOAD CAPACITY – PSF
4-9/16" MULLION

WINDOW DIMS.		W/O INTERMEDIATE HORIZONTALS			
WIDTH (W)	MULL SPAN	GROUP #1	GROUP #2	GROUP #3	GROUP #4
30"	48"	70.0	70.0	70.0	70.0
36"		70.0	70.0	70.0	70.0
42"		70.0	70.0	70.0	70.0
48"		70.0	70.0	70.0	70.0
51-3/8"		70.0	70.0	70.0	70.0
54"		70.0	70.0	70.0	70.0
60"		70.0	70.0	70.0	70.0
66"		70.0	70.0	70.0	70.0
72"		70.0	70.0	70.0	70.0
30"	54"	70.0	70.0	70.0	70.0
36"		70.0	70.0	70.0	70.0
42"		70.0	70.0	70.0	70.0
48"		70.0	70.0	70.0	70.0
51-3/8"		70.0	70.0	70.0	70.0
54"		70.0	70.0	70.0	70.0
60"		68.0	68.0	68.0	68.0
66"		61.8	61.8	61.8	61.8
72"		56.7	56.7	56.7	56.7
30"	60"	70.0	70.0	70.0	70.0
36"		70.0	70.0	70.0	70.0
42"		70.0	70.0	70.0	70.0
48"		70.0	70.0	70.0	70.0
51-3/8"		65.0	65.0	65.0	65.0
54"		61.5	61.5	61.5	61.5
60"		55.1	55.1	55.1	55.1
66"		50.1	50.1	50.1	50.1
72"		45.9	45.9	45.9	45.9
30"	66"	70.0	70.0	70.0	70.0
36"		67.4	70.0	70.0	70.0
42"		60.1	68.2	68.2	68.2
48"		55.3	58.6	58.6	58.6
51-3/8"		53.4	54.2	54.2	54.2
54"		51.3	51.3	51.3	51.3
60"		45.7	45.7	45.7	45.7
30"	72"	65.0	70.0	70.0	70.0
36"		55.6	63.3	69.4	69.4
42"		49.3	56.1	58.1	58.1
48"		44.9	49.8	49.8	49.8
51-3/8"		43.1	46.1	46.1	46.1
54"		41.9	43.6	43.6	43.6
60"		38.7	38.7	38.7	38.7
30"	78"	54.9	62.5	70.0	70.0
36"		46.8	53.2	59.9	59.9
42"		41.2	46.9	50.1	50.1
48"		37.3	42.5	43.0	43.0
51-3/8"		35.6	39.7	39.7	39.7
54"		34.5	37.5	37.5	37.5
30"	84"	47.0	53.5	64.2	64.2
36"		39.9	45.4	52.2	52.2
42"		35.0	39.9	43.7	43.7
48"		31.5	35.9	37.5	37.5
51-3/8"		30.0	34.1	34.6	34.6

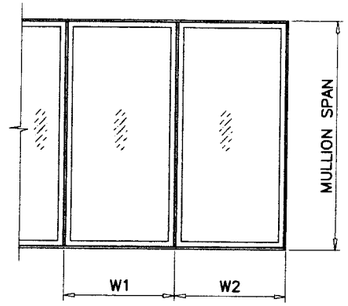

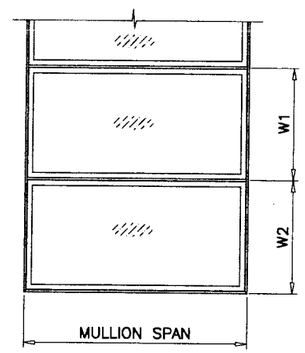

$$\text{WIDTH (W)} = \frac{W1 + W2}{2}$$

DESIGN LOAD CAPACITY – PSF
6-9/16" MULLION

WINDOW DIMS.		W/O INTERMEDIATE HORIZONTALS				
WIDTH (W)	MULL SPAN	GROUP #5	GROUP #6	GROUP #7	GROUP #8	GROUP #9
24"	60"	70.0	70.0	70.0	70.0	70.0
30"		70.0	70.0	70.0	70.0	70.0
36"		70.0	70.0	70.0	70.0	70.0
40"		70.0	70.0	70.0	70.0	70.0
42"		70.0	70.0	70.0	70.0	70.0
48"		70.0	70.0	70.0	70.0	70.0
54"		70.0	70.0	70.0	70.0	70.0
60"		70.0	70.0	70.0	70.0	70.0
66"		70.0	70.0	70.0	70.0	70.0
72"		64.4	64.4	64.4	64.4	64.4
24"	66"	70.0	70.0	70.0	70.0	70.0
30"		70.0	70.0	70.0	70.0	70.0
36"		70.0	70.0	70.0	70.0	70.0
40"		70.0	70.0	70.0	70.0	70.0
42"		70.0	70.0	70.0	70.0	70.0
48"		70.0	70.0	70.0	70.0	70.0
54"		70.0	70.0	70.0	70.0	70.0
60"		64.2	64.2	64.2	64.2	64.2
24"	72"	70.0	70.0	70.0	70.0	70.0
30"		70.0	70.0	70.0	70.0	70.0
36"		70.0	70.0	70.0	70.0	70.0
40"		70.0	70.0	70.0	70.0	70.0
42"		70.0	70.0	70.0	70.0	70.0
48"		69.9	69.9	69.9	69.9	69.9
54"		61.1	61.1	61.1	61.1	61.1
60"		54.3	54.3	54.3	54.3	54.3
24"	78"	70.0	70.0	70.0	70.0	70.0
30"		70.0	70.0	70.0	70.0	70.0
36"		70.0	70.0	70.0	70.0	70.0
40"		70.0	70.0	70.0	70.0	70.0
42"		70.0	70.0	70.0	70.0	70.0
48"		60.3	60.3	60.3	60.3	60.3
54"		52.6	52.6	52.6	52.6	52.6
24"	84"	70.0	70.0	70.0	70.0	70.0
30"		70.0	70.0	70.0	70.0	70.0
36"		68.6	70.0	70.0	70.0	70.0
40"		62.7	64.9	64.9	64.9	64.9
42"		60.2	61.3	61.3	61.3	61.3
48"		52.6	52.6	52.6	52.6	52.6
24"	90"	70.0	70.0	70.0	70.0	70.0
30"		70.0	70.0	70.0	70.0	70.0
36"		59.3	64.4	64.4	64.4	64.4
40"		54.1	57.1	57.1	57.1	57.1
42"		51.9	54.0	54.0	54.0	54.0
48"		46.3	46.3	46.3	46.3	46.3
24"	96"	70.0	70.0	70.0	70.0	70.0
30"		61.2	70.0	70.0	70.0	70.0
36"		51.8	57.1	57.1	57.1	57.1
40"		47.1	50.6	50.6	50.6	50.6
42"		45.2	47.9	47.9	47.9	47.9
45"		42.2	44.7	44.7	44.7	44.7

DESIGN LOAD CAPACITY – PSF
6-9/16" MULLION

WINDOW DIMS.		W/O INTERMEDIATE HORIZONTALS				
WIDTH (W)	MULL SPAN	GROUP #5	GROUP #6	GROUP #7	GROUP #8	GROUP #9
24"	102"	66.9	70.0	70.0	70.0	70.0
30"		54.1	61.9	62.6	62.6	62.6
36"		45.6	51.0	51.0	51.0	51.0
40"		41.5	45.2	45.2	45.2	45.2
42"		39.7	42.8	42.8	42.8	42.8
24"	108"	59.6	68.2	70.0	70.0	70.0
30"		48.1	55.0	56.2	56.2	56.2
36"		40.5	45.8	45.8	45.8	45.8
40"		36.8	40.7	40.7	40.7	40.7

Engr: DR. HUMAYOUN FAROOQ
STRUCTURES
FLA. PE # 16557
C.A.N. 3538

SEP 2 2 2007

Approved as complying with the Florida Building Code
Date DEC. 20 2007
NOA# 07-1025.03
Miami Dade Product Control Division
By Manuel Perez

AL-FAROOQ CORPORATION
ENGINEERS & PRODUCT DEVELOPMENT
1235 S.W. 87 AVE
MIAMI, FLORIDA 33174
TEL. (305) 264-8100 FAX. (305) 262-6978

MULLION\M05-01AC

LAMINATED VENEERED LUMBER MULLION SYSTEM

ANDERSEN CORPORATION
100 FOURTH AVE. NORTH
BAYPORT, MN. 55003-1096
TEL (800) 426-7691 FAX (-)

revisions:			
no	date	by	description

date: 08-15-05
scale: 1/2" = 1"
dr. by: HAMID
chk. by:

drawing no.
M05-01

DESIGN LOAD CAPACITY – PSF
4-9/16" MULLION

WINDOW DIMS.		WITH INTERMEDIATE HORIZONTALS			
WIDTH (W)	MULL SPAN	GROUP #1	GROUP #2	GROUP #3	GROUP #4
30"	48"	70.0	70.0	70.0	70.0
36"		70.0	70.0	70.0	70.0
42"		70.0	70.0	70.0	70.0
48"		70.0	70.0	70.0	70.0
51-3/8"		70.0	70.0	70.0	70.0
54"		70.0	70.0	70.0	70.0
60"		69.0	70.0	70.0	70.0
66"		62.7	70.0	70.0	70.0
72"		57.5	65.4	70.0	70.0
30"	54"	70.0	70.0	70.0	70.0
36"		70.0	70.0	70.0	70.0
42"		70.0	70.0	70.0	70.0
48"		68.1	70.0	70.0	70.0
51-3/8"		63.7	70.0	70.0	70.0
54"		60.6	68.9	70.0	70.0
60"		54.5	62.0	70.0	70.0
66"		49.6	56.4	70.0	70.0
72"		45.4	51.7	64.8	70.0
30"	60"	70.0	70.0	70.0	70.0
36"		70.0	70.0	70.0	70.0
42"		63.1	70.0	70.0	70.0
48"		55.2	62.8	70.0	70.0
51-3/8"		51.6	58.7	70.0	70.0
54"		49.1	55.8	70.0	70.0
60"		44.2	50.3	63.0	70.0
66"		40.1	45.7	57.2	66.8
72"		36.8	41.9	52.5	61.2
30"	66"	70.0	70.0	70.0	70.0
36"		60.8	69.2	70.0	70.0
42"		52.1	59.3	70.0	70.0
48"		45.6	51.9	65.0	70.0
51-3/8"		42.6	48.5	60.8	70.0
54"		40.5	46.2	57.8	67.5
60"		36.5	41.5	52.0	60.7
30"	72"	61.3	69.8	70.0	70.0
36"		51.1	58.2	70.0	70.0
42"		43.8	49.9	62.5	70.0
48"		38.3	43.6	54.7	63.8
51-3/8"		35.8	40.8	51.1	59.6
54"		34.1	38.8	48.6	56.7
60"		30.7	34.9	43.7	51.0
30"	78"	52.3	59.5	70.0	70.0
36"		43.5	49.6	62.1	70.0
42"		37.3	42.5	53.2	62.1
48"		32.7	37.2	46.6	54.3
51-3/8"		30.5	34.7	43.5	50.8
54"		29.0	33.0	41.4	48.3
30"	84"	45.1	51.3	64.3	70.0
36"		37.5	42.7	53.5	60.6
42"		32.2	36.6	45.9	51.9
48"		28.2	32.1	40.2	45.4
51-3/8"		26.3	29.9	37.5	42.4

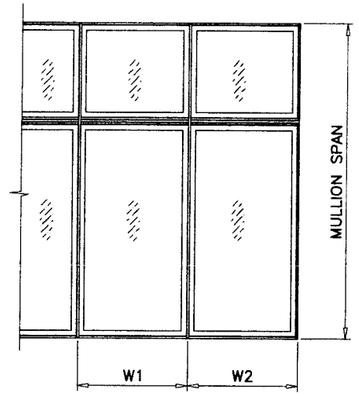

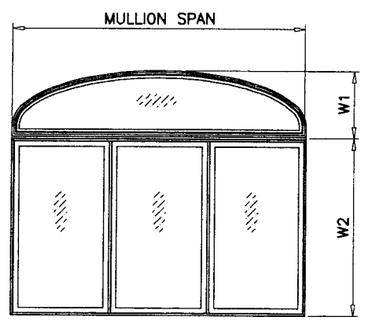

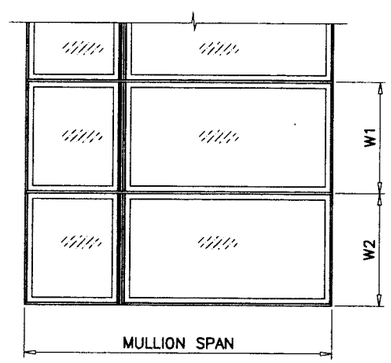

$$\text{WIDTH (W)} = \frac{W1 + W2}{2}$$

DESIGN LOAD CAPACITY – PSF
6-9/16" MULLION

WINDOW DIMS.		WITH INTERMEDIATE HORIZONTALS				
WIDTH (W)	MULL SPAN	GROUP #5	GROUP #6	GROUP #7	GROUP #8	GROUP #9
24"	60"	70.0	70.0	70.0	70.0	70.0
30"		70.0	70.0	70.0	70.0	70.0
36"		70.0	70.0	70.0	70.0	70.0
40"		70.0	70.0	70.0	70.0	70.0
42"		70.0	70.0	70.0	70.0	70.0
48"		70.0	70.0	70.0	70.0	70.0
54"		70.0	70.0	70.0	70.0	70.0
60"		70.0	70.0	70.0	70.0	70.0
66"		69.0	70.0	70.0	70.0	70.0
72"		63.2	–	–	–	–
24"	66"	70.0	70.0	70.0	70.0	70.0
30"		70.0	70.0	70.0	70.0	70.0
36"		70.0	70.0	70.0	70.0	70.0
40"		70.0	70.0	70.0	70.0	70.0
42"		70.0	70.0	70.0	70.0	70.0
48"		70.0	70.0	70.0	70.0	70.0
54"		69.7	70.0	70.0	70.0	70.0
60"		62.7	70.0	70.0	70.0	70.0
24"	72"	70.0	70.0	70.0	70.0	70.0
30"		70.0	70.0	70.0	70.0	70.0
36"		70.0	70.0	70.0	70.0	70.0
40"		70.0	70.0	70.0	70.0	70.0
42"		70.0	70.0	70.0	70.0	70.0
48"		65.9	70.0	70.0	70.0	70.0
54"		58.6	67.0	70.0	70.0	70.0
60"		52.7	60.3	66.5	–	–
24"	78"	70.0	70.0	70.0	70.0	70.0
30"		70.0	70.0	70.0	70.0	70.0
36"		70.0	70.0	70.0	70.0	70.0
40"		67.4	70.0	70.0	70.0	70.0
42"		64.2	70.0	70.0	70.0	70.0
48"		56.1	64.3	70.0	70.0	70.0
54"		49.9	57.1	63.0	67.7	–
24"	84"	70.0	70.0	70.0	70.0	70.0
30"		70.0	70.0	70.0	70.0	70.0
36"		64.5	70.0	70.0	70.0	70.0
40"		58.1	66.5	70.0	70.0	70.0
42"		55.3	63.3	69.8	70.0	70.0
48"		48.4	55.4	61.1	65.7	65.7
24"	90"	70.0	70.0	70.0	70.0	70.0
30"		67.5	70.0	70.0	70.0	70.0
36"		56.2	64.4	70.0	70.0	70.0
40"		50.6	57.9	63.8	68.7	68.7
42"		48.2	55.2	60.8	65.4	65.4
48"		42.2	48.3	53.2	57.2	57.2
24"	96"	70.0	70.0	70.0	70.0	70.0
30"		59.3	67.9	70.0	70.0	70.0
36"		49.4	56.6	62.3	67.0	67.1
40"		44.5	50.9	56.1	60.3	60.4
42"		42.4	48.5	53.4	57.5	57.5
45"		39.6	45.3	49.8	53.6	53.6

DESIGN LOAD CAPACITY – PSF
6-9/16" MULLION

WINDOW DIMS.		WITH INTERMEDIATE HORIZONTALS				
WIDTH (W)	MULL SPAN	GROUP #5	GROUP #6	GROUP #7	GROUP #8	GROUP #9
24"	102"	65.7	70.0	70.0	70.0	70.0
30"		52.5	60.1	66.3	70.0	70.0
36"		43.8	50.1	55.2	59.4	59.4
40"		39.4	45.1	49.7	53.5	53.5
42"		37.5	42.9	47.3	50.9	50.9
24"	108"	58.6	67.0	70.0	70.0	70.0
30"		46.8	53.6	59.1	62.5	62.5
36"		39.0	44.7	49.3	52.1	52.1
40"		35.1	40.2	44.3	46.9	46.9

Engr: DR. HUMAYOUN FAROOQ
STRUCTURES
FLA. PE # 16557
C.A.N. 3538

SEP 2 2 2007

Approved as complying with the Florida Building Code
Date DEC. 20, 2007
NOAS 07-1075.08
Miami Dade Product Control Division
By Manuel Perez

AL-FAROOQ CORPORATION
ENGINEERS & PRODUCT DEVELOPMENT
1235 S.W. 87 AVE
MIAMI, FLORIDA 33174
TEL. (305) 264-8100 FAX. (305) 262-6978

MULLION\M05-01AC

LAMINATED VENEERED LUMBER MULLION SYSTEM

ANDERSEN CORPORATION
100 FOURTH AVE. NORTH
BAYPORT, MN. 55003-1096
TEL. (800) 426-7691 FAX (-)

revisions:

no	date	by	description

date: 08-15-05
scale: 1/2" = 1"
dr. by: HAMID
chk. by:

drawing no.
M05-01

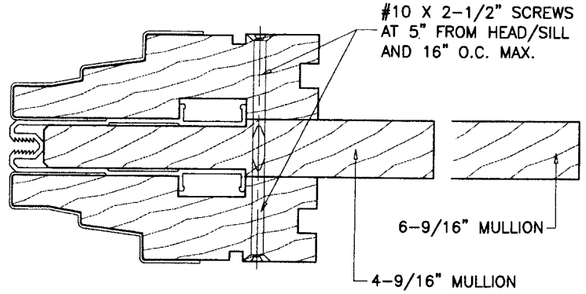

CASEMENT TO CASEMENT
VERTICAL JOIN

AWNING TO AWNING
HORIZONTAL JOIN

MULLION TYPE	GROUP NO.
4-9/16"	3
6-9/16"	7

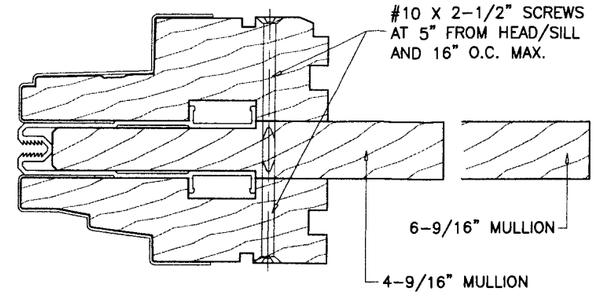

CASEMENT TO AWNING
VERTICAL OR HORIZONTAL JOIN

MULLION TYPE	GROUP NO.
4-9/16"	3
6-9/16"	7

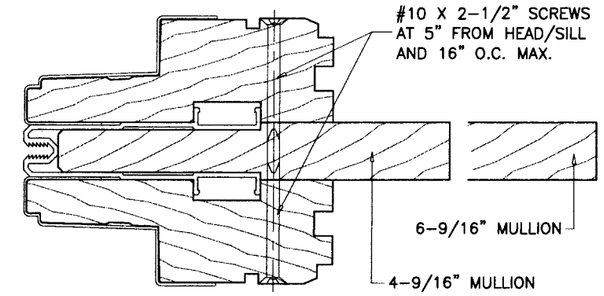

CASEMENT TO CASEMENT
HORIZONTAL JOIN

AWNING TO AWNING
VERTICAL JOIN

MULLION TYPE	GROUP NO.
4-9/16"	3
6-9/16"	7

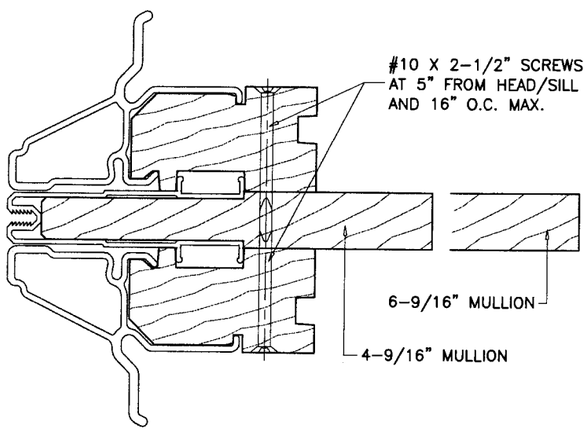

FLEXIFRAME TO FLEXIFRAME
VERTICAL OR HORIZONTAL JOIN

MULLION TYPE	GROUP NO.
4-9/16"	2
6-9/16"	5

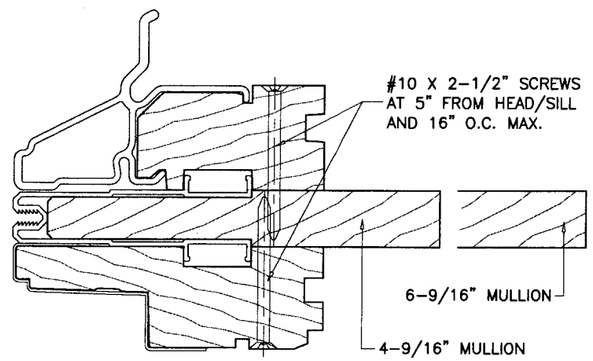

CASEMENT TO FLEXIFRAME
HORIZONTAL JOIN

AWNING TO FLEXIFRAME
VERTICAL JOIN

MULLION TYPE	GROUP NO.
4-9/16"	2
6-9/16"	6

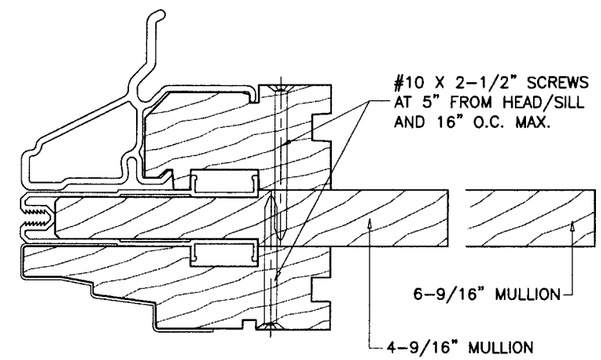

CASEMENT TO FLEXIFRAME
VERTICAL JOIN

AWNING TO FLEXIFRAME
HORIZONTAL JOIN

MULLION TYPE	GROUP NO.
4-9/16"	2
6-9/16"	6

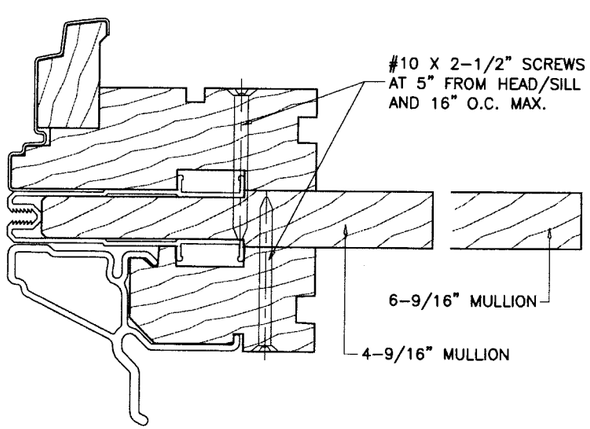

FLEXIFRAME TO CIRCLE TOP/QUARTER
VERTICAL OR HORIZONTAL JOIN

MULLION TYPE	GROUP NO.
4-9/16"	2
6-9/16"	6

Engr: DR. HUMAYOUN FAROOQ
STRUCTURES
FLA. PE # 16557
C.A.N. 3538

SEP 2 2 2007

Approved as complying with the Florida Building Code
Date DEC. 20, 2007
NOA# 07-1025.08
Miami Dade Product Control Division
By Manuel Perez

AL-FAROOQ CORPORATION
ENGINEERS & PRODUCT DEVELOPMENT
1235 S.W. 87 AVE
MIAMI, FLORIDA 33174
TEL. (305) 264-8100 FAX. (305) 262-6978

MULLION\M05-01AC

LAMINATED VENEERED LUMBER MULLION SYSTEM

ANDERSEN CORPORATION
100 FOURTH AVE. NORTH
BAYPORT, MN. 55003-1096
TEL. (800) 426-7691 FAX (-)

revisions:			
no	date	by	description

date: 08-15-05
scale: 1/2" = 1"
dr. by: HAMID
chk. by:

drawing no.
M05-01

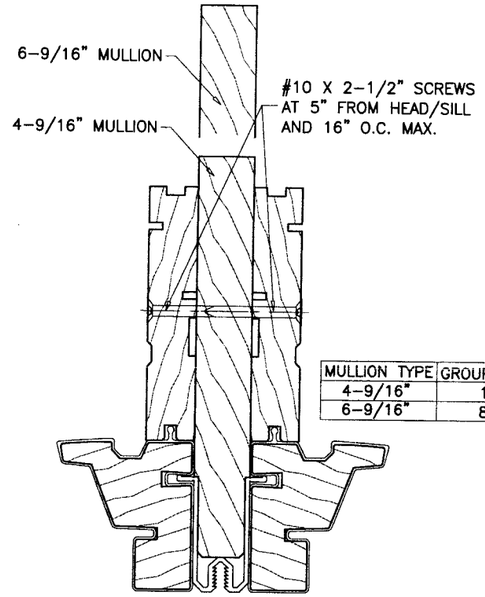

MULLION TYPE	GROUP NO.
4-9/16"	1
6-9/16"	8

400 TWDH WDW TO 400 TWDH WDW
VERTICAL JOIN

400 TWDH WDW TO 400 TWDH PICTURE WDW
VERTICAL JOIN

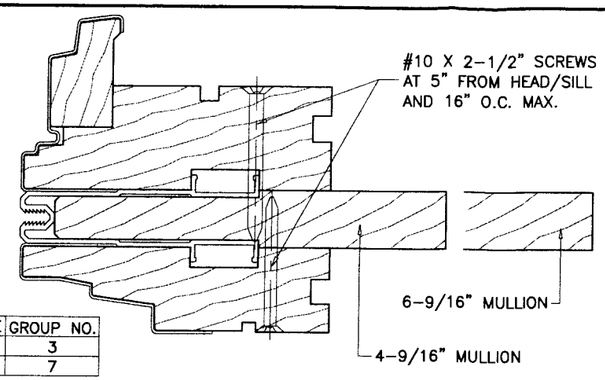

MULLION TYPE	GROUP NO.
4-9/16"	3
6-9/16"	7

CIRCLE TOP TO AWNING
HORIZONTAL JOIN

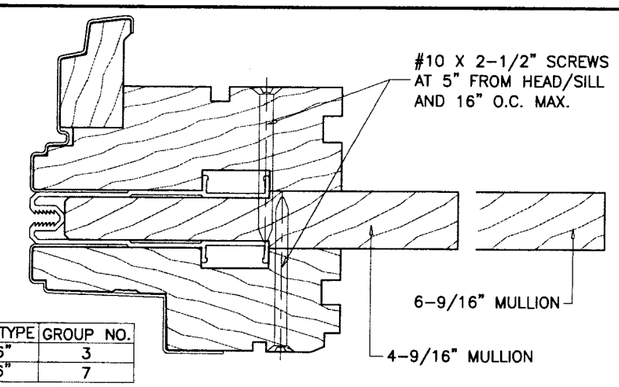

MULLION TYPE	GROUP NO.
4-9/16"	3
6-9/16"	7

CIRCLE TOP TO CASEMENT
HORIZONTAL JOIN

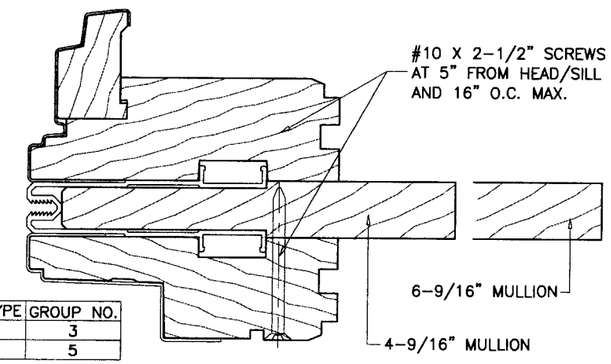

MULLION TYPE	GROUP NO.
4-9/16"	3
6-9/16"	5

CASMT PICTURE WDW. TO AWNING
VERTICAL JOIN

CASMT PICTURE WDW. TO CASEMENT
HORIZONTAL JOIN

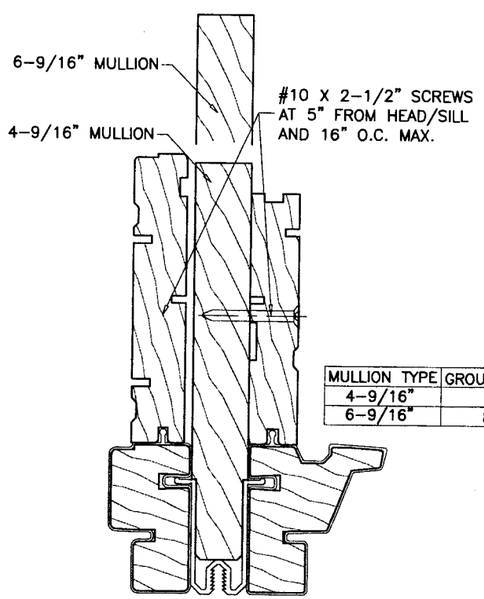

MULLION TYPE	GROUP NO.
4-9/16"	1
6-9/16"	8

PSNL WDW TO 400 TWDH PICTURE WDW
VERTICAL JOIN

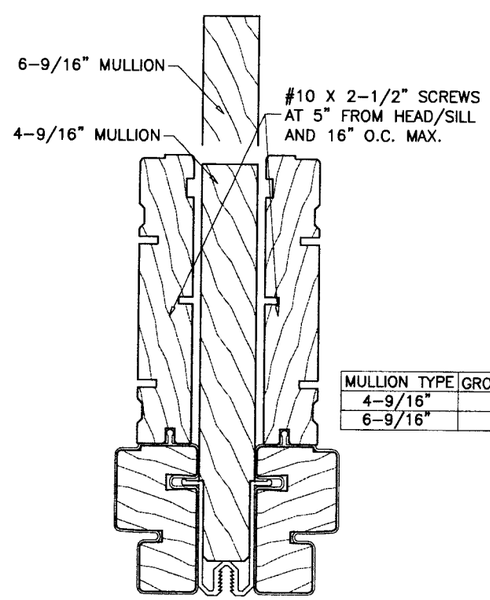

MULLION TYPE	GROUP NO.
4-9/16"	1
6-9/16"	9

PSNL WDW TO PSNL WDW
VERTICAL JOIN

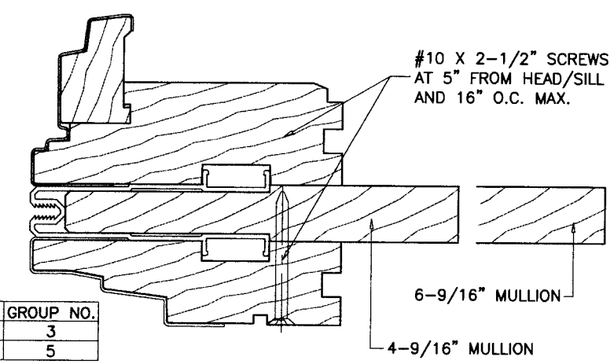

MULLION TYPE	GROUP NO.
4-9/16"	3
6-9/16"	5

CASMT PICTURE WDW. TO AWNING
HORIZONTAL JOIN

CASMT PICTURE WDW. TO CASEMENT
VERTICAL JOIN

Engr: DR. HUMAYOUN FAROOQ
STRUCTURES
FLA. PE # 16557
C.A.N. 3538

SEP 2 2 2007

Approved as complying with the Florida Building Code
Date DEC. 20, 2007
NOA# 07-1025.08
Miami Dade Product Control Division
By Manuel Perez

AL-FAROOQ CORPORATION
ENGINEERS & PRODUCT DEVELOPMENT
1235 S.W. 87 AVE
MIAMI, FLORIDA 33174
TEL. (305) 264-8100 FAX. (305) 262-6978

MULLION\M05-01AC

LAMINATED VENEERED LUMBER MULLION SYSTEM

ANDERSEN CORPORATION
100 FOURTH AVE. NORTH
BAYPORT, MN. 55003-1096
TEL (800) 426-7691 FAX (-)

revisions:

no	date	by	description

date: 08-15-05
scale: 1/2" = 1"
dr. by: HAMID
chk. by:

drawing no.
M05-01

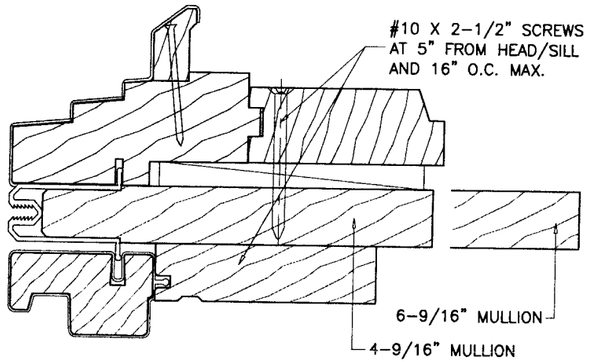

PSNL TO CIRCLE TOP-NL
HORIZONTAL JOIN

MULLION TYPE	GROUP NO.
4-9/16"	1
6-9/16"	8

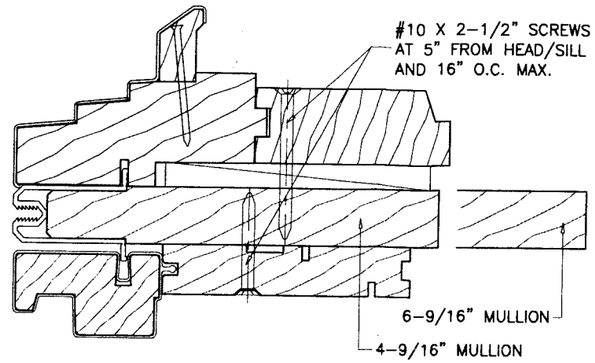

400 TW TO CIRCLE TOP-NL
HORIZONTAL JOIN

MULLION TYPE	GROUP NO.
4-9/16"	1
6-9/16"	9

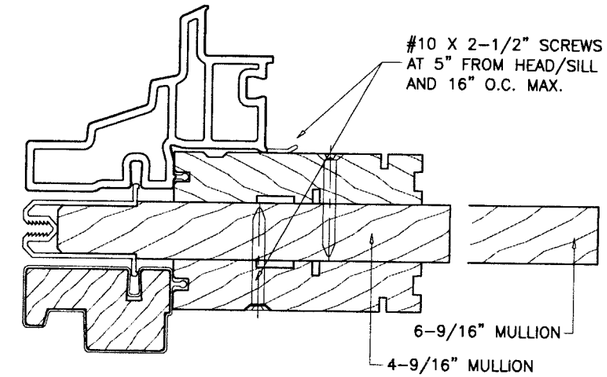

400 TW TO TW TRANSOM
HORIZONTAL JOIN

MULLION TYPE	GROUP NO.
4-9/16"	1
6-9/16"	6

Engr: DR. HUMAYOUN FAROOQ
STRUCTURES
FLA. PE # 16557
C.A.N. 3538

SEP 22 2007

Approved as complying with the Florida Building Code
Date DEC. 20, 2007
NOAA 07-1025.08
Miami Dade Product Control Division
By Manuel Perez

AL-FAROOQ CORPORATION
ENGINEERS & PRODUCT DEVELOPMENT
1235 S.W. 87 AVE
MIAMI, FLORIDA 33174
TEL. (305) 264-8100 FAX. (305) 262-6978

MULLION\M05-01AC

LAMINATED VENEERED LUMBER MULLION SYSTEM

ANDERSEN CORPORATION
100 FOURTH AVE. NORTH
BAYPORT, MN. 55003-1096
TEL. (800) 426-7691 FAX (-)

(revisions:		
no	date	by description

date: 08-15-05
scale: 1/2" = 1"
dr. by: HAMID
chk. by:

drawing no.
M05-01

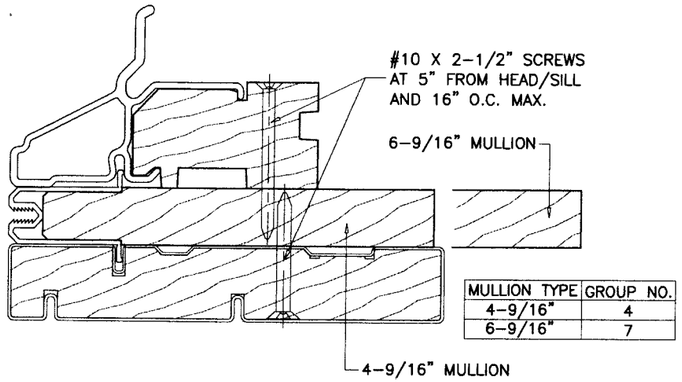

MULLION TYPE	GROUP NO.
4-9/16"	4
6-9/16"	7

FLEXIFRAME/ARCH/SPRINGLINE TO FW GLIDING DOOR
HORIZONTAL JOIN

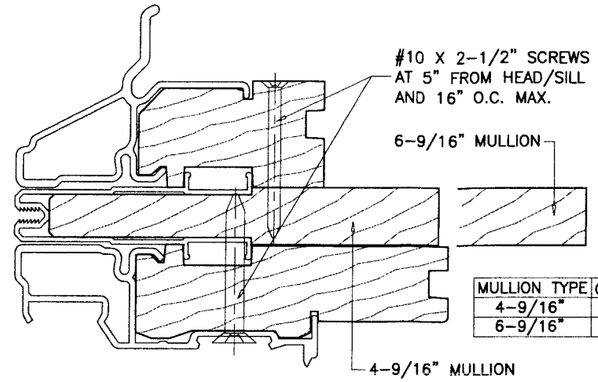

MULLION TYPE	GROUP NO.
4-9/16"	3
6-9/16"	5

FLEXIFRAME/ARCH/SPRINGLINE TO FWH DOOR
HORIZONTAL JOIN

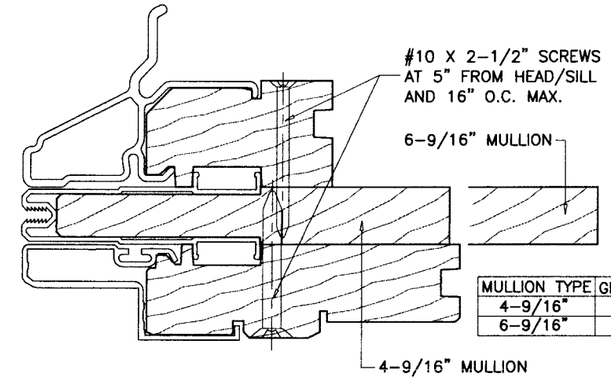

MULLION TYPE	GROUP NO.
4-9/16"	3
6-9/16"	5

FLEXIFRAME/ARCH/SPRINGLINE TO FWO DOOR
HORIZONTAL JOIN

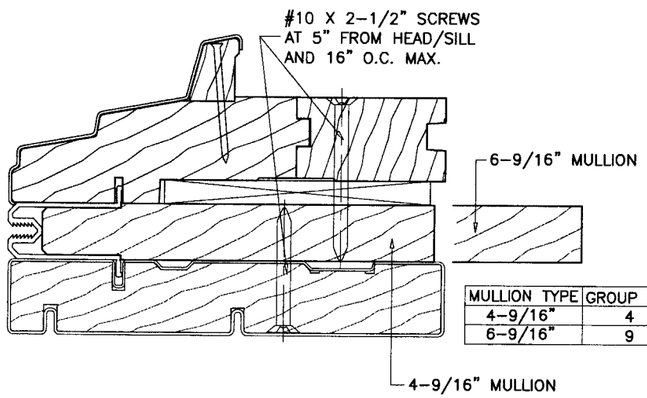

MULLION TYPE	GROUP NO.
4-9/16"	4
6-9/16"	9

FLEXIFRAME/ARCH/SPRINGLINE TO FW GLIDING DOOR
HORIZONTAL JOIN

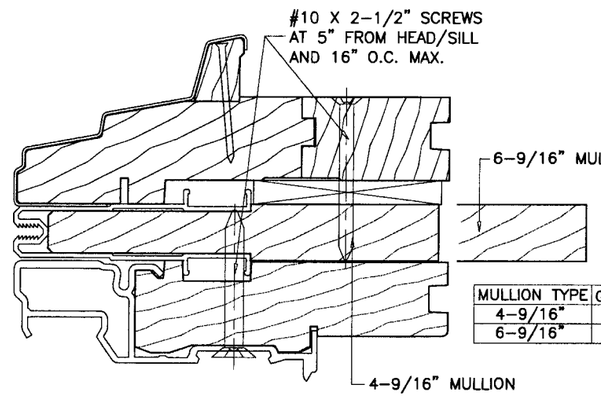

MULLION TYPE	GROUP NO.
4-9/16"	3
6-9/16"	8

FLEXIFRAME/ARCH/SPRINGLINE TO FWH DOOR
HORIZONTAL JOIN

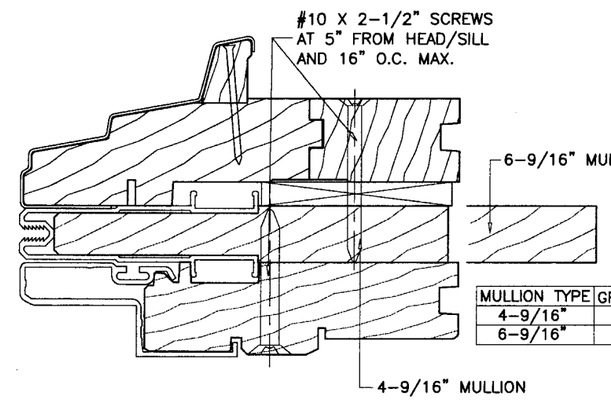

MULLION TYPE	GROUP NO.
4-9/16"	3
6-9/16"	8

FLEXIFRAME/ARCH/SPRINGLINE TO FWO DOOR
HORIZONTAL JOIN

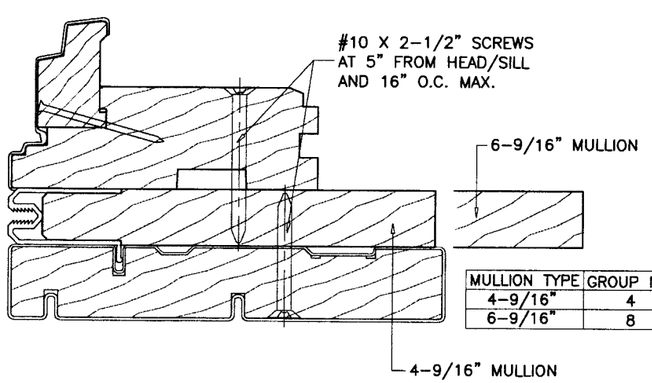

MULLION TYPE	GROUP NO.
4-9/16"	4
6-9/16"	8

PSCA PICTURE WDW TO FW GLIDING DOOR
HORIZONTAL JOIN

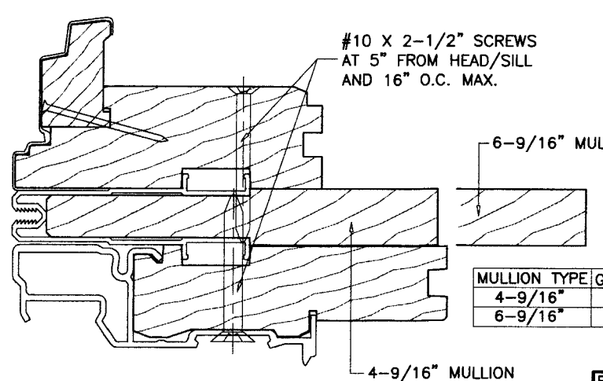

MULLION TYPE	GROUP NO.
4-9/16"	3
6-9/16"	7

PSCA PICTURE WDW TO FWH DOOR
HORIZONTAL JOIN

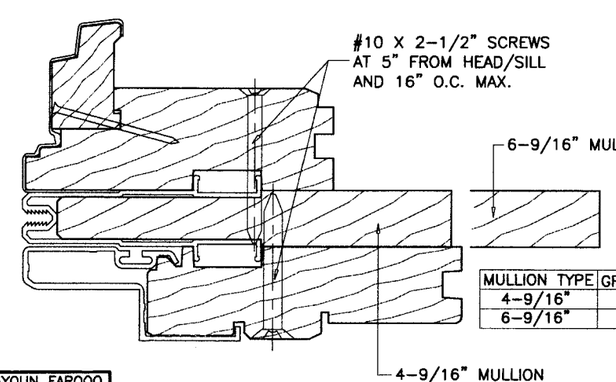

MULLION TYPE	GROUP NO.
4-9/16"	3
6-9/16"	7

PSCA PICTURE WDW TO FWO DOOR
HORIZONTAL JOIN

Engr: DR. HUMAYOUN FAROOQ
STRUCTURES
FLA. PE # 16557
C.A.N. 3538

SEP 22 2007

Approved as complying with the Florida Building Code
Date DEC. 20, 2007
NOA# 07-1025.08
Miami-Dade Product Control Division
By Manuel Perez

AL-FAROOQ CORPORATION
ENGINEERS & PRODUCT DEVELOPMENT
1235 S.W. 87 AVE
MIAMI, FLORIDA 33174
TEL. (305) 264-8100 FAX. (305) 262-6978

MULLION\M05-01AC

LAMINATED VENEERED LUMBER MULLION SYSTEM

ANDERSEN CORPORATION
100 FOURTH AVE. NORTH
BAYPORT, MN. 55003-1096
TEL. (800) 426-7691 FAX (-)

revisions:

no	date	by	description

date: 08-15-05
scale: 1/2" = 1"
dr. by: HAMID
chk. by:

drawing no.
M05-01

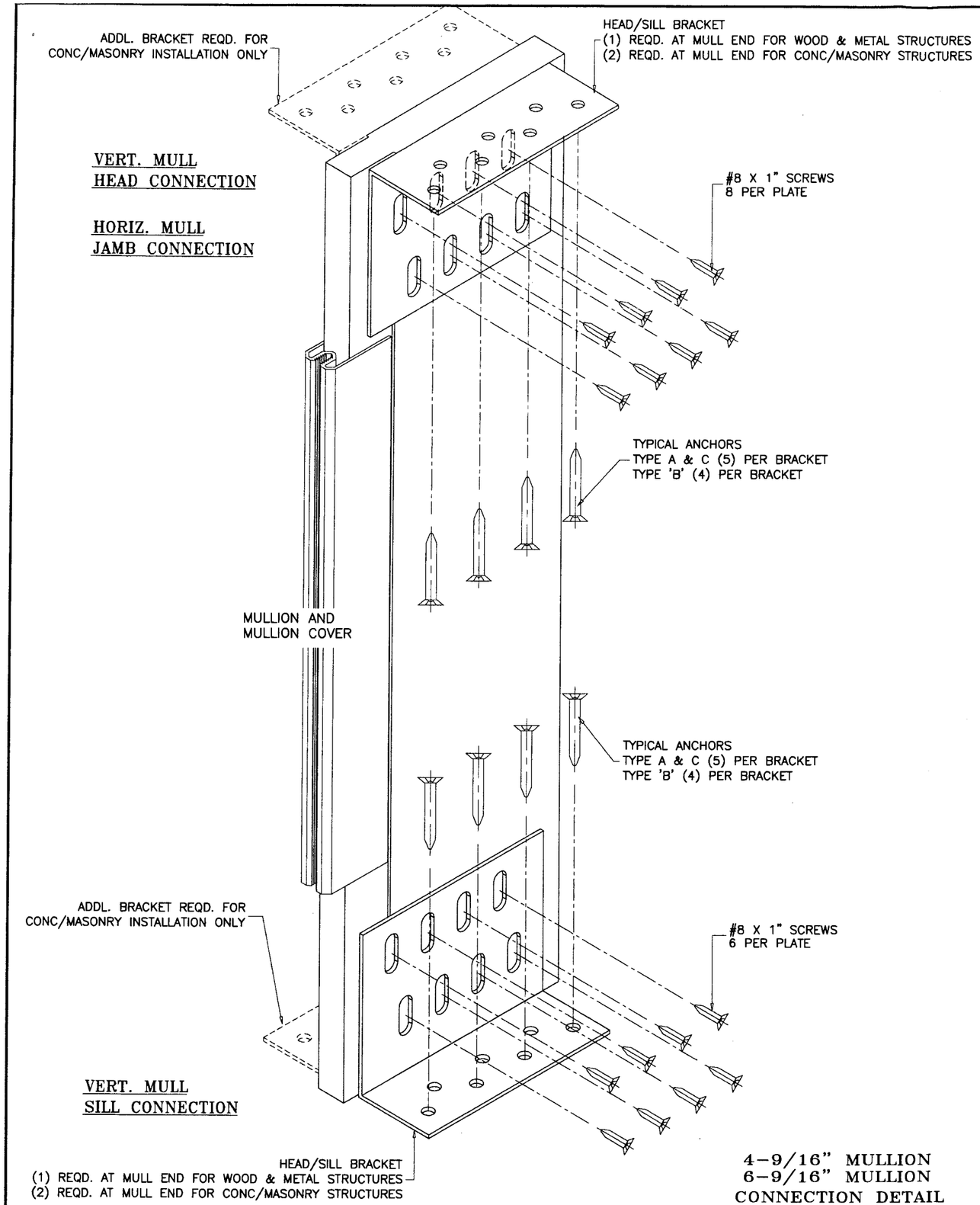

4-9/16" MULLION
6-9/16" MULLION
CONNECTION DETAIL

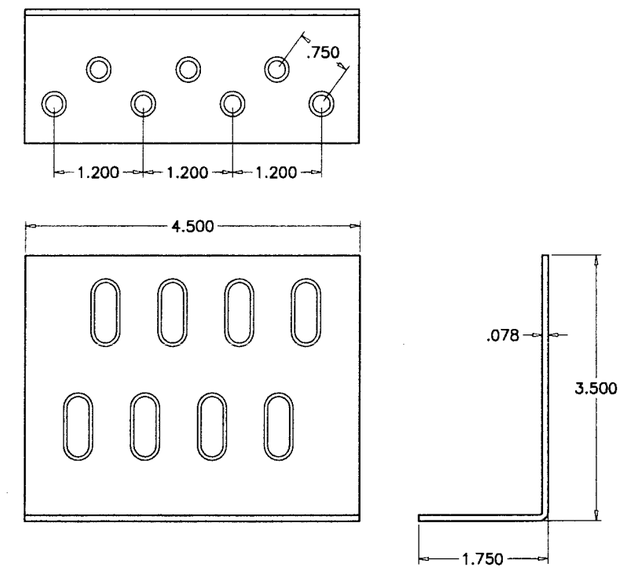

HEAD/SILL BRACKET
–
14 GA. ZINC PLATED STEEL

TYPICAL ANCHORS: SEE ELEV. FOR SPACING

TYPE 'A'– 3/16" DIA TAPCONS BY 'ELCO'
INTO 2BY WOOD BUCKS OR WOOD STRUCTURE
1-1/2" MIN. PENETRATION INTO WOOD

TYPE 'B'– 3/16" DIA TAPCONS BY 'ELCO'
THRU 1BY WOOD BUCKS INTO MASONRY OR CONC.
1-1/2" MIN. EMBED INTO MASONRY OR CONC.

DIRECTLY INTO CONCRETE OR MASONRY
1-3/4" MIN. EMBED INTO CONCRETE OR MASONRY

TYPE 'C'– #12 SMS OR SELF DRILLING SCREWS
INTO METAL STRUCTURES
STEEL : 12 GA. MIN. (Fy = 36 KSI MIN.)
ALUMINUM : 1/8" THK. MIN. (6063-T5 MIN.)
(STEEL IN CONTACT WITH ALUMINUM TO BE PLATED OR PAINTED)

TYPICAL EDGE DISTANCES
INTO CONCRETE AND MASONRY = 2-1/4" MIN.
INTO WOOD STRUCTURE = 1" MIN.
INTO METAL STRUCTURE = 3/4" MIN.

ANCHORS ℄ TO ℄ DISTANCES
INTO CONCRETE AND MASONRY = 1-3/16" MIN.
INTO WOOD STRUCTURE = 3/4" MIN.
INTO METAL STRUCTURE = 3/4" MIN.

Engr: DR. HUMAYOUN FAROOQ
STRUCTURES
FLA. PE # 16557
C.A.N. 3538

SEP 22 2007

Approved as complying with the Florida Building Code
Date DEC. 20, 2007
NOA# 07-1025.08
Miami Dade Product Control
Division
By Manuel Perez

AL-FAROOQ CORPORATION
ENGINEERS & PRODUCT DEVELOPMENT
1235 S.W. 87 AVE
MIAMI, FLORIDA 33174
TEL. (305) 264-8100 FAX. (305) 262-6978

MULLION\M05-01AC

LAMINATED VENEERED LUMBER MULLION SYSTEM

ANDERSEN CORPORATION
100 FOURTH AVE. NORTH
BAYPORT, MN. 55003-1096
TEL. (800) 426-7691 FAX (-)

revisions:			
no	date	by	description

date: 08-15-05
scale: 1/2" = 1"
dr. by: HAMID
chk. by:

drawing no.
M05-01

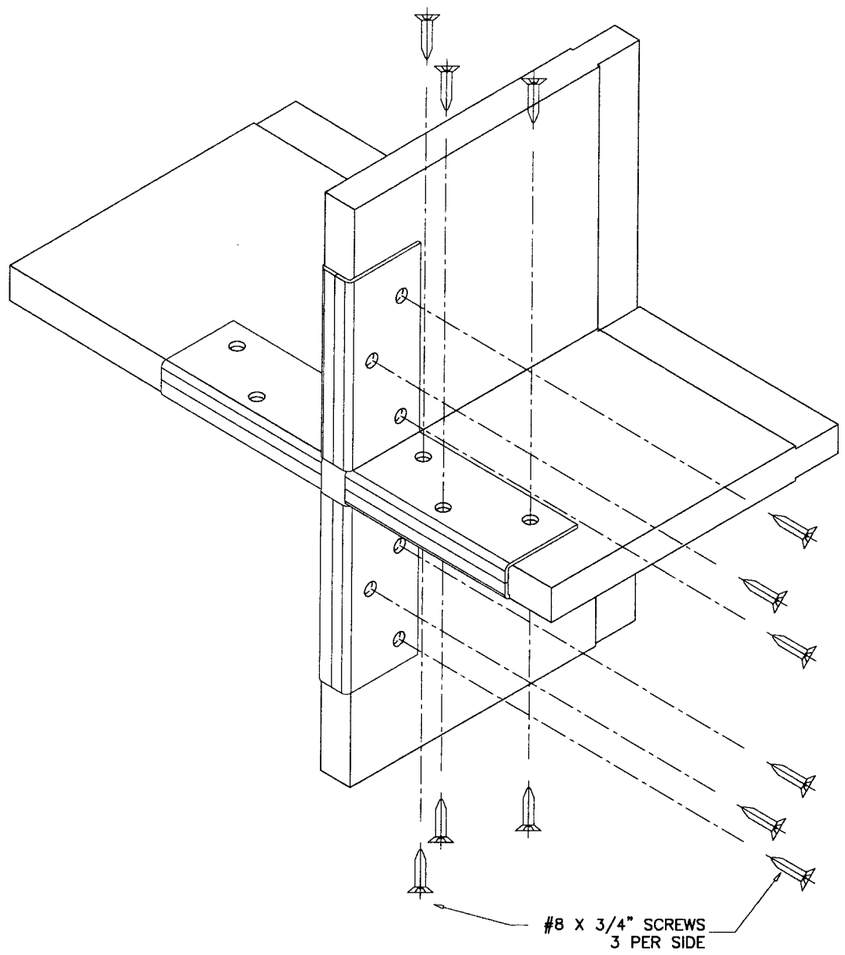

VERT. MULLION CONNECTION TO HORIZONTAL MULLION

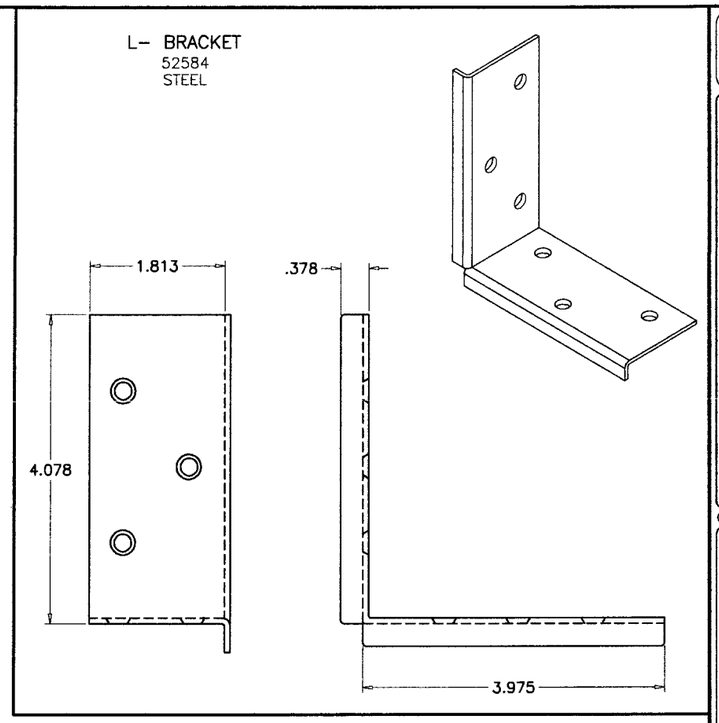

Engr: DR. HUMAYOUN FAROOQ
STRUCTURES
FLA. PE # 16557
C.A.N. 3538

SEP 2 2 2007

Approved as complying with the Florida Building Code
Date DEC. 20, 2007
NOA# 07-1025.08
Miami Dade Product Control Division
By Manuel Sere

AL-FAROOQ CORPORATION
ENGINEERS & PRODUCT DEVELOPMENT
1235 S.W. 87 AVE
MIAMI, FLORIDA 33174
TEL. (305) 264-8100 FAX. (305) 262-6978

MULLION\M05-01AC

LAMINATED VENEERED LUMBER MULLION SYSTEM

ANDERSEN CORPORATION
100 FOURTH AVE. NORTH
BAYPORT, MN. 55003-1096
TEL (800) 426-7691 FAX (-)

revisions:			
no	date	by	description

date: 08-15-05
scale: 1/2" = 1"
dr. by: HAMID
chk. by:

drawing no.
M05-01

sheet 12 of 12