MIAMI-DADE COUNTY
BUILDING CODE COMPLIANCE OFFICE (BCCO)
PRODUCT CONTROL DIVISION

MIAMI-DADE COUNTY, FLORIDA
METRO-DADE FLAGLER BUILDING
140 WEST FLAGLER STREET, SUITE 1603
MIAMI, FLORIDA 33130-1563
(305) 375-2901 FAX (305) 372-6339
www.miamidade.gov/buldingcode

# NOTICE OF ACCEPTANCE (NOA)

**Maxim Industries, Inc.**
**1630 Terre Colony Court**
**Dallas, TX 75212**

**SCOPE:**
This NOA is being issued under the applicable rules and regulations governing the use of construction materials. The documentation submitted has been reviewed by Miami-Dade County Product Control Division and accepted by the Board of Rules and Appeals (BORA) to be used in Miami Dade County and other areas where allowed by the Authority Having Jurisdiction (AHJ).

This NOA shall not be valid after the expiration date stated below. The Miami-Dade County Product Control Division (In Miami Dade County) and/or the AHJ (in areas other than Miami Dade County) reserve the right to have this product or material tested for quality assurance purposes. If this product or material fails to perform in the accepted manner, the manufacturer will incur the expense of such testing and the AHJ may immediately revoke, modify, or suspend the use of such product or material within their jurisdiction. BORA reserves the right to revoke this acceptance, if it is determined by Miami-Dade County Product Control Division that this product or material fails to meet the requirements of the applicable building code.
This product is approved as described herein, and has been designed to comply with the Florida Building Code, including the High Velocity Hurricane Zone.
**DESCRIPTION: Model MAX DGCM 07 Curb Mount Skylight.**
**APPROVAL DOCUMENT:** Drawing No. MAX DGCM 07, titled "Maxim Impact Glass Curb Mount Skylight", prepared by Maxim Industries, Inc., sheets 1 through 2 of 2, dated 06/23/07, with last revision dated 12/01/07, signed and sealed by Richard Boyette, P.E., bearing the Miami-Dade County Product Control approval stamp with the Notice of Acceptance number and approval date by the Miami-Dade County Product Control Division.
**MISSILE IMPACT RATING: Large and Small Missile Impact Resistant**
**LABELING:** Each unit shall bear a permanent label with the manufacturer's name or logo, city, state and the following statement: "Miami-Dade County Product Control Approved or MDCPCA", unless otherwise noted herein.
**RENEWAL** of this NOA shall be considered after a renewal application has been filed and there has been no change in the applicable building code negatively affecting the performance of this product.
**TERMINATION** of this NOA will occur after the expiration date or if there has been a revision or change in the materials, use, and/or manufacture of the product or process. Misuse of this NOA as an endorsement of any product, for sales, advertising or any other purposes shall automatically terminate this NOA. Failure to comply with any section of this NOA shall be cause for termination and removal of NOA.
**ADVERTISEMENT:** The NOA number preceded by the words Miami-Dade County, Florida, and followed by the expiration date may be displayed in advertising literature. If any portion of the NOA is displayed, then it shall be done in its entirety.
**INSPECTION:** A copy of this entire NOA shall be provided to the user by the manufacturer or its distributors and shall be available for inspection at the job site at the request of the Building Official.
This NOA consists of this page 1, evidence page E-1, as well as approval document mentioned above.
The submitted documentation was reviewed by **Carlos M. Utrera, P.E.**

PRODUCT CONTROL ACCEPTED

12/15/07

**NOA No 07-1105.05**
**Expiration Date: January 10, 2013**
**Approval Date: January 10, 2008**

## NOTICE OF ACCEPTANCE: EVIDENCE SUBMITTED

**A. DRAWING**

1. Drawing No. MAX DGCM 07, titled "Maxim Impact Glass Curb Mount Skylight", prepared by Maxim Industries, Inc., sheets 1 through 2 of 2, dated 06/23/07, with last revision dated 12/01/07, signed and sealed by Richard Boyette, P.E.

**B. TEST**

1. Test reports on 1) Air Infiltration Test, per FBC, TAS 202-94
   2) Uniform Static Air Pressure Test, Loading per FBC TAS 202-94
   3) Water Resistance Test, per FBC, TAS 202-94
   4) Large Missile Impact Test per FBC, TAS 201-94
   5) Cyclic Wind Pressure Loading per FBC, TAS 203-94

   along with marked-up drawings and installation of the Maxim Impact Glass Curb Mount Skylight, prepared by Hurricane Test Laboratory, LLC, and Test Report No. T482-0604-07, dated 10/09/07, signed and sealed by Vinu J. Abraham, P.E.

**C. CALCULATIONS**

1. Anchor calculations dated 10/28/07, prepared, signed and sealed by Richard Boyette, P.E.

**D. QUALITY ASSURANCE**

1. Miami Dade Building Code Compliance Office (BCCO).

**E. MATERIAL CERTIFICATION**

1. DuPont SentryGlass® Plus NOA # 06-1205.10.

**F. STATEMENTS**

1. Test Compliance letter issued by Hurricane Test Laboratory, LLC., dated 08/25/07, signed and sealed by Vinu J. Abraham, P.E.
2. Code compliance letter dated 10/29/07, issued, signed and sealed by Richard Boyette, P.E.
3. No financial interest letter dated 10/29/07, issued, signed and sealed by Richard Boyette, P.E.

12/15/07

**Carlos M. Utrera, P.E.**
**Product Control Examiner**
**NOA No: 07-1105.05**
**Expiration Date: January 10, 2013**
**Approval Date: January 10, 2008**

# DESIGN PRESSURE = +60psf / -100psf

## Detail #1:
## Frame, Gutter Seat & Glass Section Detail

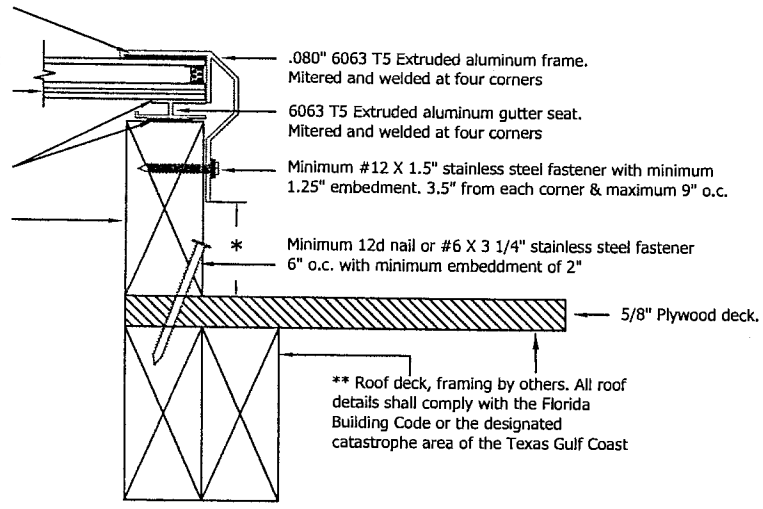


* Minimum distance = 4" from aluminum frame to roof surface for shingles or BUR without insulation. For insulation and roof tile add insulation or roof tile thickness to 4" minimum height

** Curb buck = Nominal Southern yellow pine 2 X 6 with skylight set on buck with minimum 1/8" tall bead of Dow Corning 795 silicone building sealant. Installation fasteners are stainless steel #12 X 1.5" with minimum 1.25" embedment located 3.5" from each corner and centered maximum 9" on center

## Detail #2
## Frame Corner Construction and Weld Detail

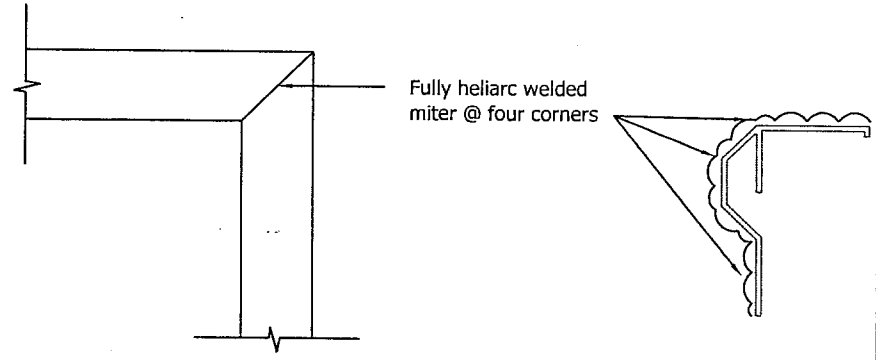


## Detail #3
## Glazing Detail

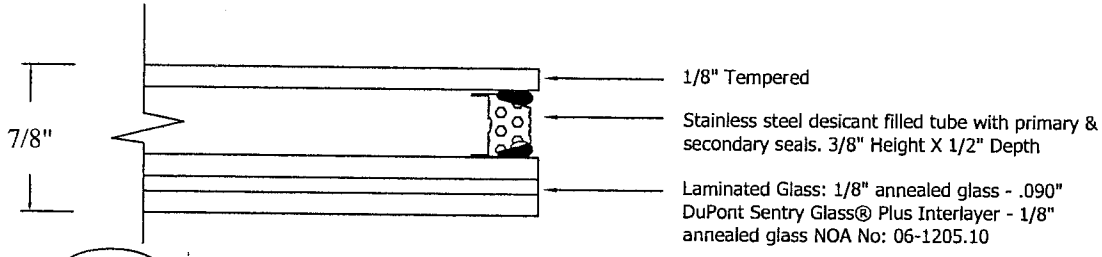


## Detail #4
## Gutter Construction and Weld Detail

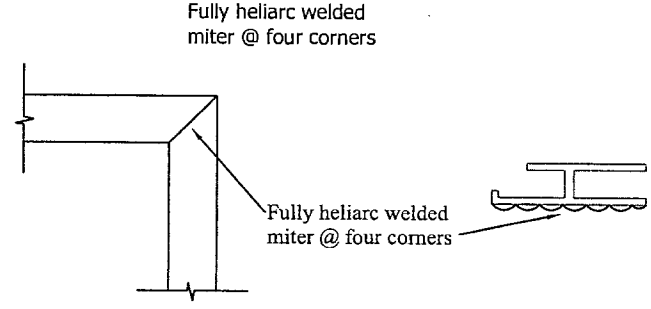


APPROVED DEC 06 2007

RICHARD BOYETTE
FL PE # 42485
4031 COCONUT BLVD
ROYAL PALM BCH FL 33411
561-790-5766

1/10/2008
07-1105.05

**MAXIM**
**HURRICANE RESISTANT**
**S K Y L I G H T S**
1630 Terre Colony Court Dallas, Texas 75212
P: 888.222.4898 P: 214.905.2021 F: 214.905.2024
www.maximskylights.com

TITLE: MAXIM IMPACT GLASS CURB MOUNT SKYLIGHT
DRAWING NO.: MAX DGCM 07 DATE: 2007.12.01
DRAW BY: DJT REVISION: #1
SCALE: NTS
SHEET: 1 OF 2

# DESIGN PRESSURE = +60psf / -100psf

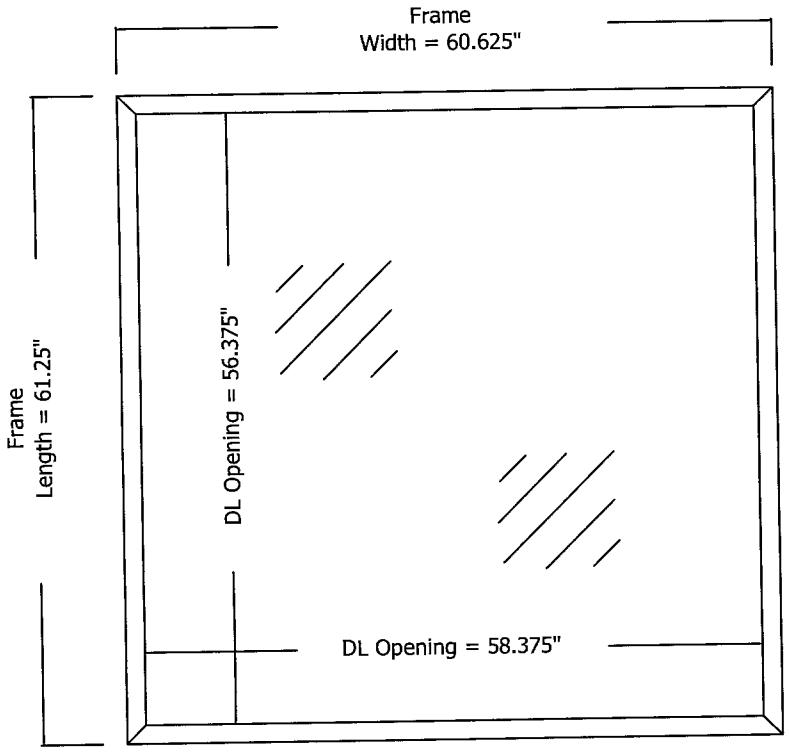


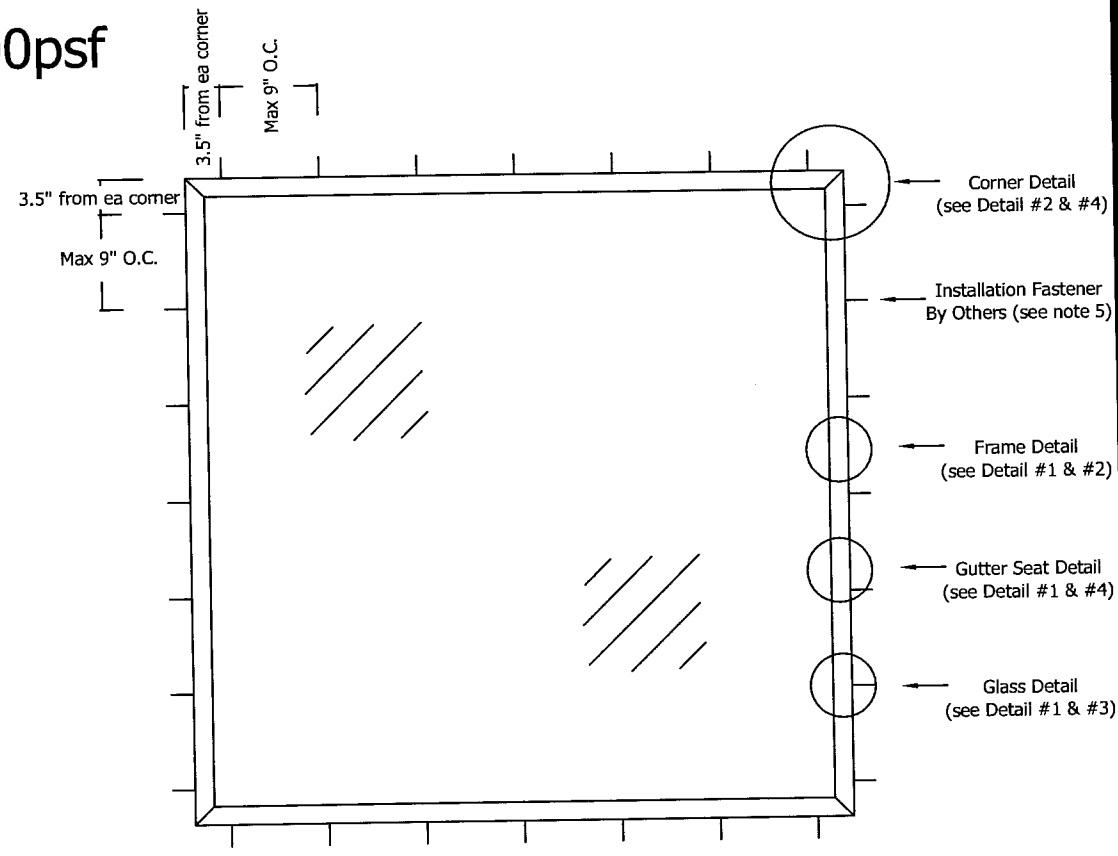


Notes:

1. This skylight is designed to comply with all zones, including the HVHZ, of the Florida Building Code and all zones of the designated catastrophe area of the Texas Gulf Coast.
2. This skylight meets small & large missle impact resistance (TAS-201/ASTM E1886/ASTM E1996) and no other protection is required.
3. All framing and roof deck is by others and must comply with the Florida Building Code or the designated catastrophe area of the Texas Gulf Coast.
4. All sizes equal to or less than the test size total square footage are to be accepted under this NOA.
5. Fasteners used to attach skylight to wood curb are to be minimum #12 X 1.5" stainless steel with minimum embedment of 1.25"

Bill of Materials:

1. 6063-T5 Extruded Aluminum Frame mitered and welded at four corners. Manufacturer - Maxim
2. 6063-T5 Extruded Aluminum Gutter mitered and welded at four corners. Manufacturer - Maxim
3. Dow Corning 795 Silicone Building Sealant located between aluminum frame and glass (glass bite) and glass and gutter. Manufacturer - Dow Corning
4. 7/8" Insulated glass with Sentry Glass Plus interlayer: 1/8" Tempered - 3/8" stainless steel desicant filled tube (air space) - 2 pcs 1/8" annealed with .090" Sentry Glass Plus interlayer. Manufacturer - DuPont
5. #12 X 1.5" Stainless steel fasteners 3.5" from each corner, maximum 9" on center with minimum embedment of 1.25".


RICHARD BOYETTE
FL PE # 42485
4031 COCONUT BLVD
ROYAL PALM BCH FL 33411
561-790-5766

APPROVED DEC 06 2007

1/10/2008
07-1105.05


MAXIM
HURRICANE RESISTANT
S K Y L I G H T S
1630 Terre Colony Court Dallas, Texas 75212
P: 888.222.4898 P: 214.905.2021 F: 214.905.2024
www.maximskylights.com


TITLE: MAXIM IMPACT GLASS CURB MOUNT SKYLIGHT

DRAWING NO.: MAX DGCM 07 DATE: 2007.12.01

DRAW BY: DJT REVISION: #1

SCALE: NTS

SHEET: 2 OF 2