MIAMI-DADE COUNTY

BUILDING CODE COMPLIANCE OFFICE (BCCO)
PRODUCT CONTROL DIVISION

MIAMI-DADE COUNTY, FLORIDA
METRO-DADE FLAGLER BUILDING
140 WEST FLAGLER STREET, SUITE 1603
MIAMI, FLORIDA 33130-1563
(305) 375-2901 FAX (305) 375-2908
www.buildingcodeonline.com

NOTICE OF ACCEPTANCE (NOA)

Miami Wall Systems, Inc.
701 West 25 Street
Hialeah, FL 33010

SCOPE:
This NOA is being issued under the applicable rules and regulations governing the use of construction materials. The documentation submitted has been reviewed by Miami-Dade County Product Control Division and accepted by the Board of Rules and Appeals (BORA) to be used in Miami Dade County and other areas where allowed by the Authority Having Jurisdiction (AHJ).

This NOA shall not be valid after the expiration date stated below. The Miami-Dade County Product Control Division (In Miami Dade County) and/or the AHJ (in areas other than Miami Dade County) reserve the right to have this product or material tested for quality assurance purposes. If this product or material fails to perform in the accepted manner, the manufacturer will incur the expense of such testing and the AHJ may immediately revoke, modify, or suspend the use of such product or material within their jurisdiction. BORA reserves the right to revoke this acceptance, if it is determined by Miami-Dade County Product Control Division that this product or material fails to meet the requirements of the applicable building code.

This product is approved as described herein, and has been designed to comply with the Florida Building Code, including the High Velocity Hurricane Zone.

DESCRIPTION: Series "100" Aluminum Sliding Glass Door w/ Steel reinforcements-SMI

APPROVAL DOCUMENT: Drawing titled "SGD Series100", sheets 1 through 8 of 8, prepared by Xcel Engineering Corp., dated 09/22/98 and last revised on Dec 19, 2006, signed and sealed by Sifang Zhao, P.E., bearing the Miami-Dade County Product Control Renewal stamp with the Notice of Acceptance number and expiration date by the Miami-Dade County Product Control Division.

MISSILE IMPACT RATING: Small Missile Impact Resistant
Limitation:

1. Double rows of anchors min 1.5" apart and 16"OC max are required at jams.
2. Glazing to be laminated by Solutia "Saflex" interlayer.

LABELING: Each unit shall bear a permanent label with the manufacturer's name or logo, city, state and following statement: "Miami-Dade County Product Control Approved", unless otherwise noted herein.

RENEWAL of this NOA shall be considered after a renewal application has been filed and there has been no change in the applicable building code negatively affecting the performance of this product.

TERMINATION of this NOA will occur after the expiration date or if there has been a revision or change in the materials, use, and/or manufacture of the product or process. Misuse of this NOA as an endorsement of any product, for sales, advertising or any other purposes shall automatically terminate this NOA. Failure to comply with any section of this NOA shall be cause for termination and removal of NOA.

ADVERTISEMENT: The NOA number preceded by the words Miami-Dade County, Florida, and followed by the expiration date may be displayed in advertising literature. If any portion of the NOA is displayed, then it shall be done in its entirety.

INSPECTION: A copy of this entire NOA shall be provided to the user by the manufacturer or its distributors and shall be available for inspection at the job site at the request of the Building Official.

This NOA **renews NOA # 06-1121.17** consists of this page 1 and evidence page E-1, as well as approval document mentioned above.
The submitted documentation was reviewed by **Ishaq I. Chanda, P. E.**

PRODUCT CONTROL ACCEPTED

11/19/17

NOTICE OF ACCEPTANCE: EVIDENCE SUBMITTED

A. DRAWINGS (transferred from file # **06-1121.17**)

1. Manufacturer's die drawings and sections.
2. Drawing titled "SGD Series100", sheets 1 through 8 of 8, prepared by Xcel Engineering Corp., dated 09/22/98 and last revised on Dec 19, 2006, signed and sealed by Sifang Zhao, P.E.

B. TESTS (transferred from file **# 06-1121.17**)

1. Test reports on 1) Air Infiltration Test, per FBC, TAS 202-94
   2) Uniform Static Air Pressure Test, Loading per FBC, TAS 202-94
   3) Water Resistance Test, per FBC, TAS 202-94
   4) Forced Entry Test, per FBC 2411 3.2.1 and TAS 202-94
   5) Small Missile Impact Test per FBC, TAS 201-94
   6) Cyclic Wind Pressure Loading per FBC, TAS 203-94

Along with marked-up drawings and installation diagram of an Aluminum Sliding Glass Door, prepared by Fenestration Testing Laboratory, Inc., Test Report No. **FTL-1743**, Test Reports No. **FTL-1776** and **FTL-1782**, dated August 23, 1997, signed and sealed by Late Diamond Gill, P.E.

C. CALCULATIONS

1. Anchor verification calculation, complying w/ FBC 2004, prepared by Xcel Engineering Corporation dated 12-18-06, signed and sealed by Sifang Zhao, P.E.
2. Glazing complies with ASTME-1300-98 & -02.

D. QUALITY ASSURANCE

1. Miami Dade Building Code Compliance Office (BCCO).

E. MATERIAL CERTIFICATIONS

1. Notice of Acceptance No. **06-0216.06** issued to Solutia, Inc. for their "Saflex IIIG clear & color Interlayer", expiring on 05/21/11.

F. STATEMENTS

1. Testing agreement letter dated 10-08-07 between Fenestration Testing Lab(FTL) & Miami Wall Sys, issued by FTL
2. Statement letter of compliance w/FBC-2004 and "No financial interest", signed by Sifang Zhao, P.E.
3. Lab compliance statements, part of above referenced test reports.

G. OTHER

1. This NOA **renews # 06-1121.17** expiring on December 10, 2007.
2. One year conditional approval, subjected to successful verification test.

Ishaq I. Chanda

Ishaq I. Chanda, P. E.
Product Control Examiner
NOA No 07-1105.08
Expiration Date: December 10, 2008
Approval Date: December 13, 2007

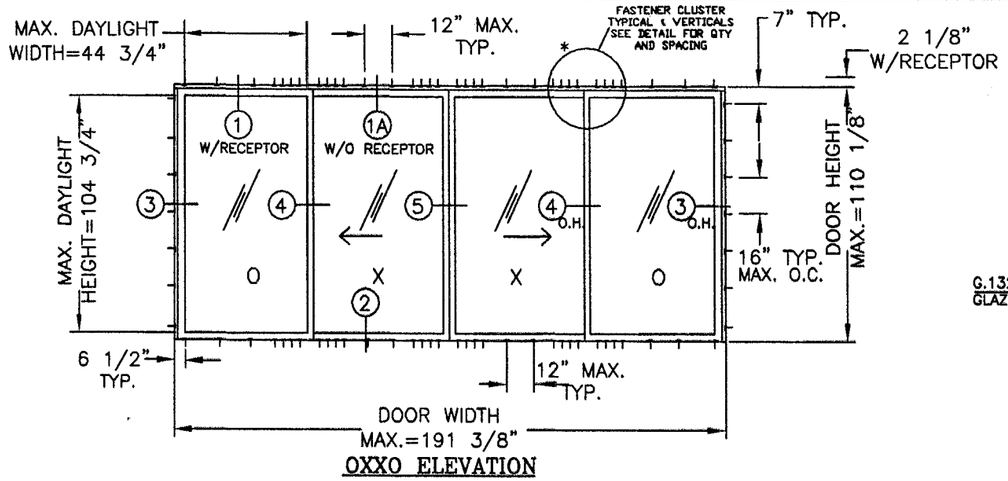

OXXO ELEVATION

GENERAL NOTES:

(1) FRAME HEAD AND SILL USE SAME FASTENER SPACING.
(2) MAX. OPERATING PANEL SIZE: 49 7/8"x109 1/8", MAX. FIXED PANEL SIZE: 49 5/16"x109 1/8"
(3) ALL ANCHORS AT JAMBS ARE DOUBLE ROW.
(4) FOR DESIGN PRESSURE RETINGS OF REINF'T PACKAGES SEE TABLE ON SHEET #6
(5) SMALL MISSILE IMPACT (SMI): UNIT TO BE INSTALLED ABOVE 30 FT ABOVE THE GRADE

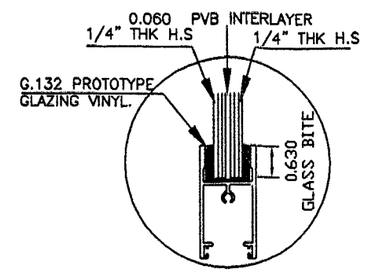

TYP. GLAZING DETAIL

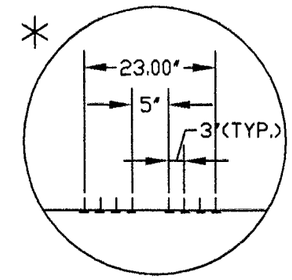

TYPICAL INSTALLATION HOLES CLUSTER @ ℄ OF ALL VERTICALS. HEAD & SILL. USE CLUSTER OF (8)

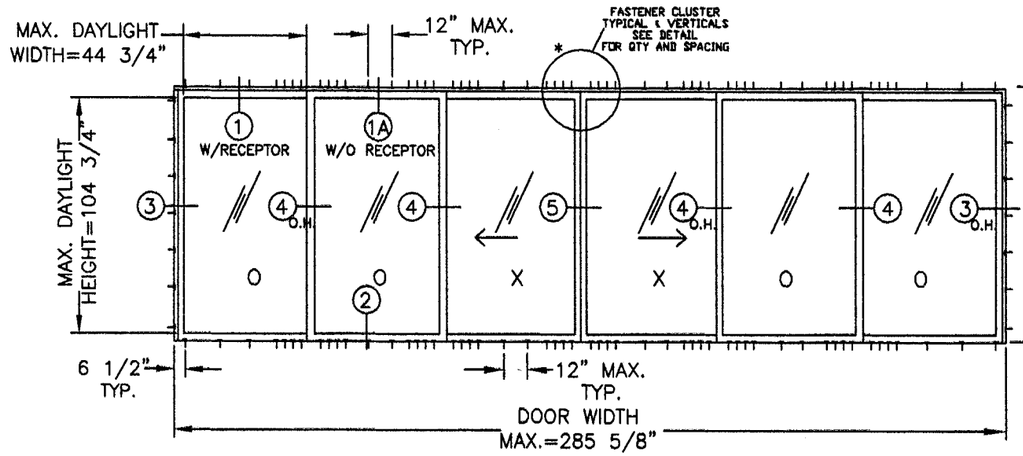

OOXXOO ELEVATION

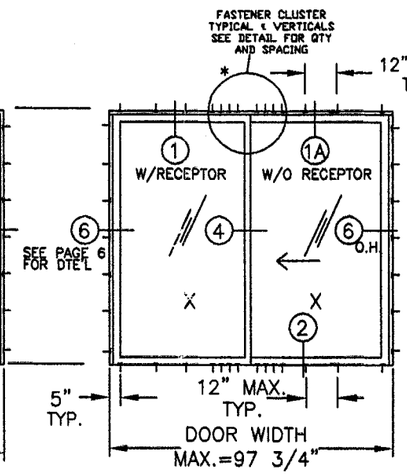

XX ELEVATION

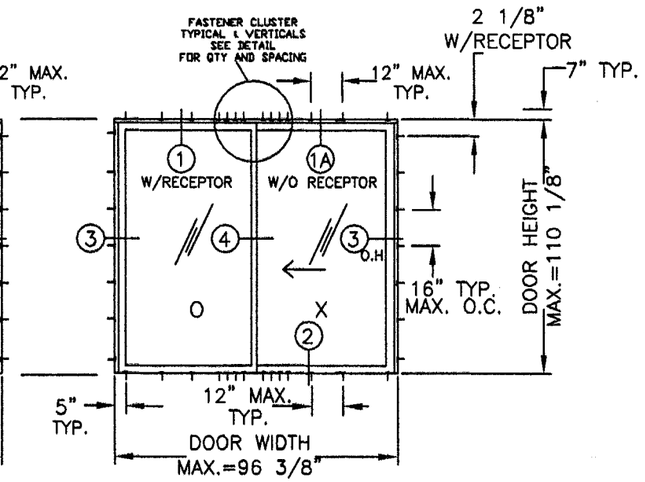

OX-XO ELEVATION
(OX SHOWN)

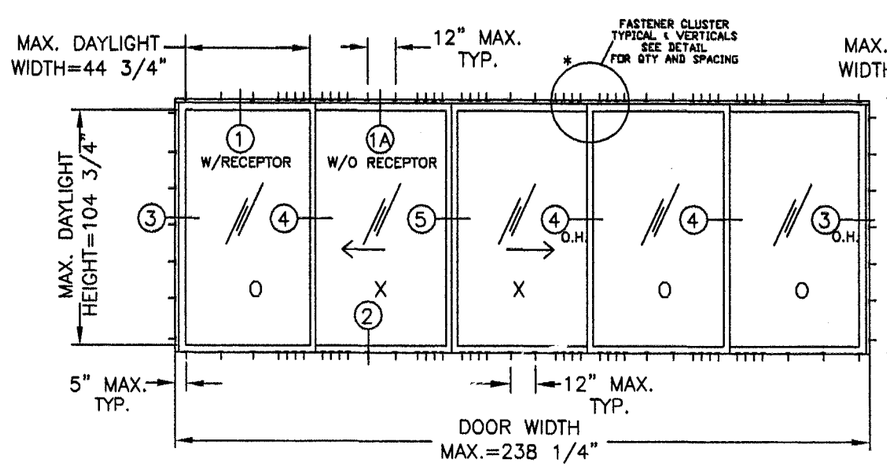

OXXOO-OOXXO ELEVATION

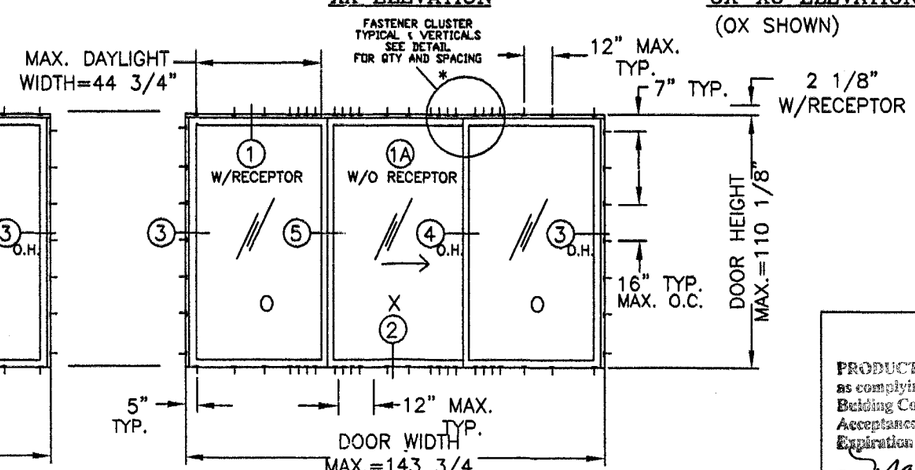

OXO ELEVATION

PRODUCT RENEWED
as complying with the Florida Building Code
Acceptance No 07-1105.08
Expiration Date DEC 10, 2008
By Shaq I. Uwanda
Miami Dade Product Control Division

PRODUCT RENEWED
as complying with the Florida Building Code
Acceptance No 06-1121.17
Expiration Date DEC 10, 2007
By Manuel Seda
Miami Dade Product Control Division

XCEL ENGINEERING CORP.
7785 NW 56 Street.
Miami, Fl 33166
(305) 772 5023
CAN (EB) 9324

DEC 19 2006

Sifang Zhao Fla PE# 50685

Miami Wall Systems, Inc.
701 West 25th street
Hialeah, Florida. 33010
Phone:(305) 888-2300 Fax:(305) 888-3058

SGD SERIES 100

DOOR ELEVATIONS
REINFORCEMENT SUMMARY CHART

NO.	DATE	REVISION
1	11/13/08	UPDATE TO 2004 BUILDING CODE

DATE: 09/22/98
SCALE: 1/2"=1'-0"
DWG. BY: L.G.
CHK. BY:
DWG NO.: MWS-100
SHEET 1 OF 8

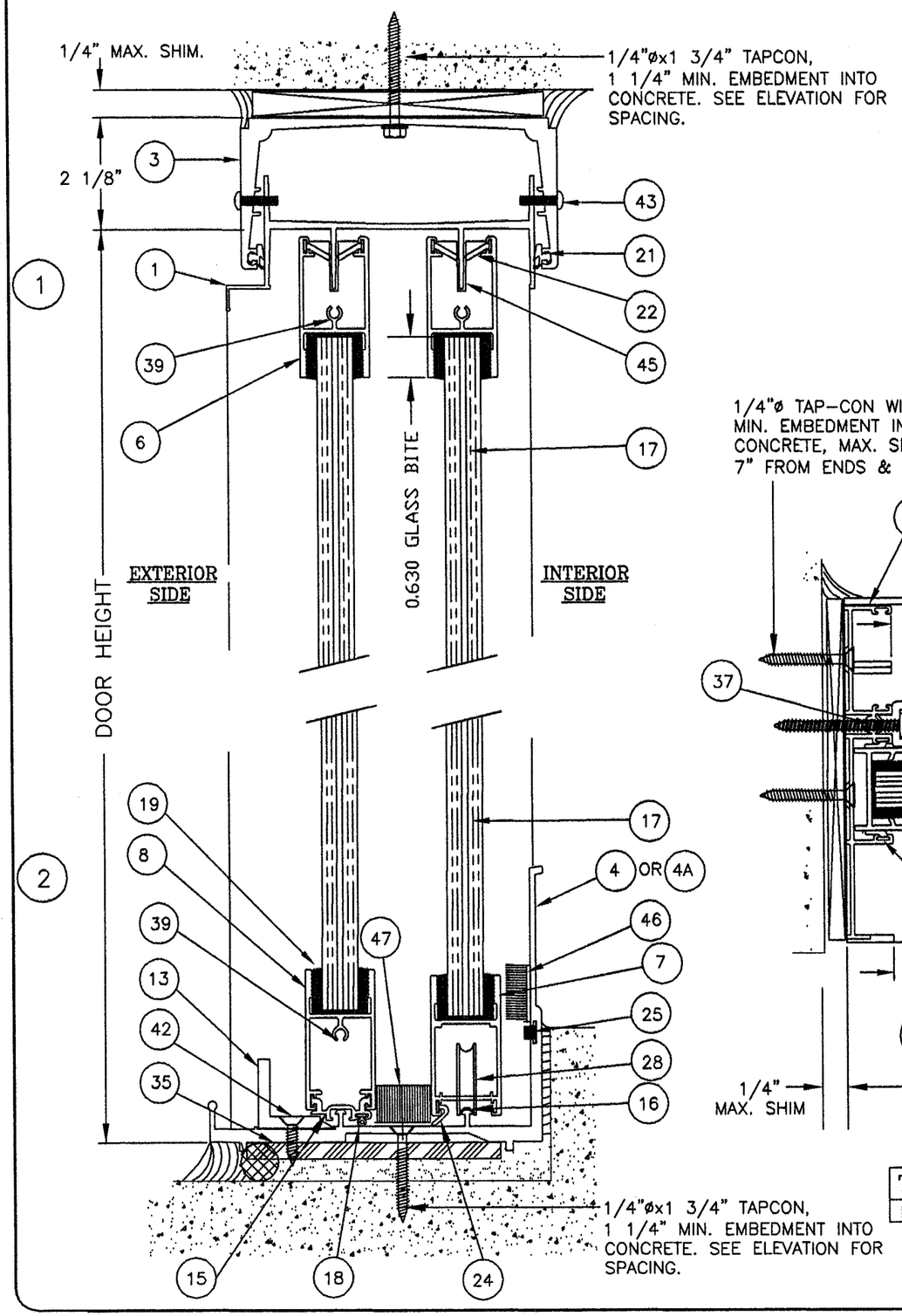

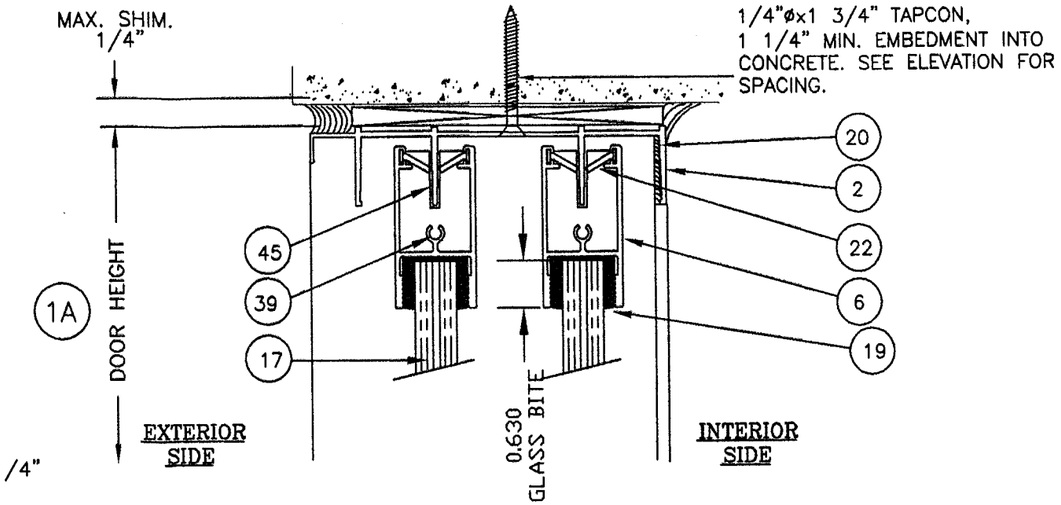

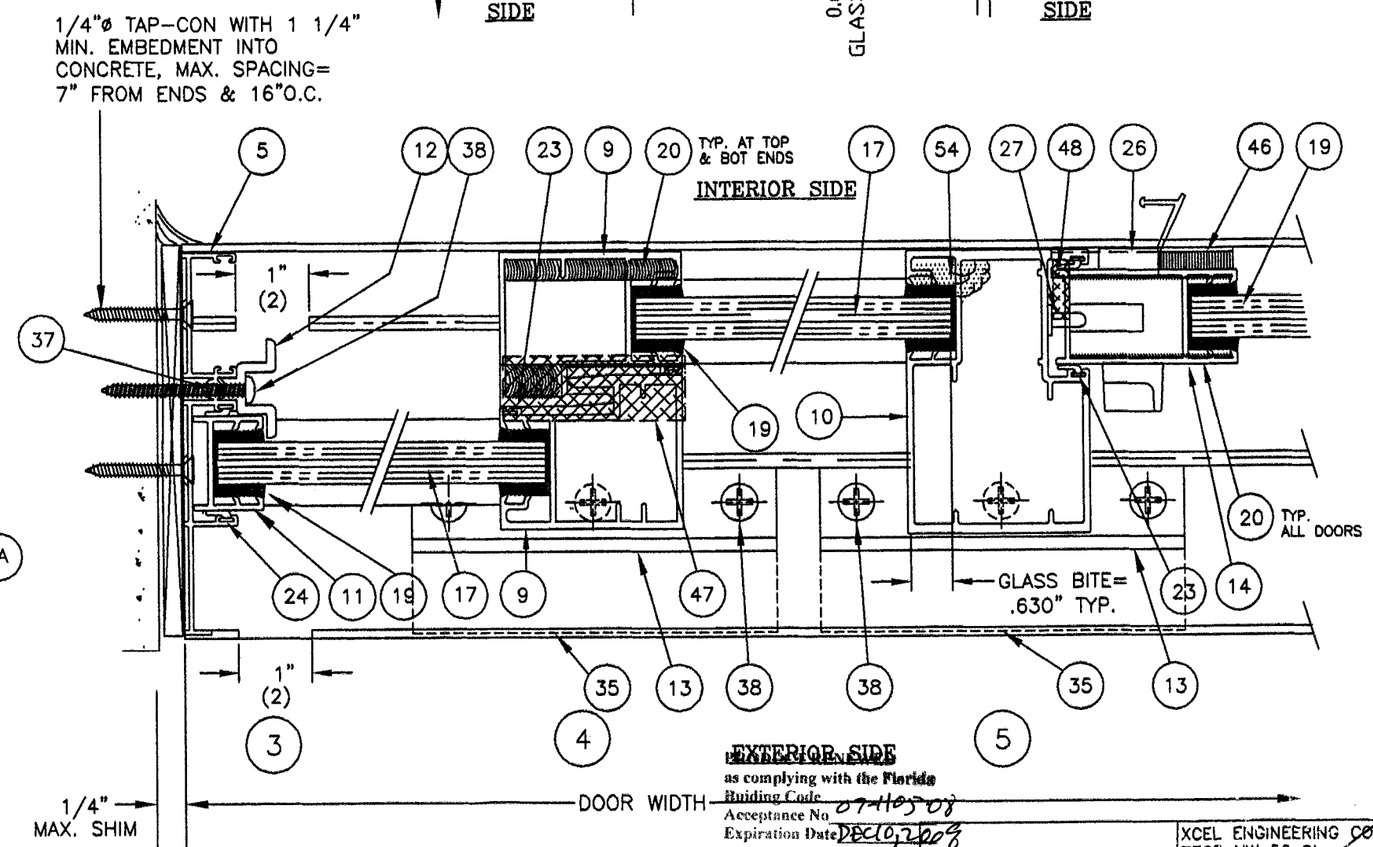

TEST #	DESIGNATION	D.P.(PSF)		W.T.P.
FTL# 1797	NO REINFORCEMENT	+63.3	-63.3	16.0 PSF

PRODUCT RENEWED as complying with the Florida Building Code Acceptance No. 07-1105.08 Expiration Date DEC 10, 2008 By Miami-Dade Product Control Division

PRODUCT RENEWED as complying with the Florida Building Code Acceptance No. 06-1121.17 Expiration Date DEC. 10, 2007 By Miami-Dade Product Control Division

XCEL ENGINEERING CORP.
7785 NW 56 Street.
Miami, Fl 33166
(305) 772 8023
CAN (EB) 9324

DEC 19 2006

Sifang Zhao Fla PE# 50685

Miami Wall Systems, Inc.
701 West 25th street
Hialeah, Florida. 33010
Phone:(305) 888-2300 Fax:(305) 888-3058

SGD SERIES 100
STANDARD INSTALLATION DETAILS NO REINFORCEMENT

NO.	DATE	REVISION
1	11/13/06	UPDATE TO 2004 BUILDING CODE
2	12/19/06	PER BCCO COMMENTS

DATE: 09/22/98
SCALE: 1/2"=1'-0"
DWG. BY: L.G.
CHK. BY:
DWG NO.: MWS-100
SHEET 2 OF 8

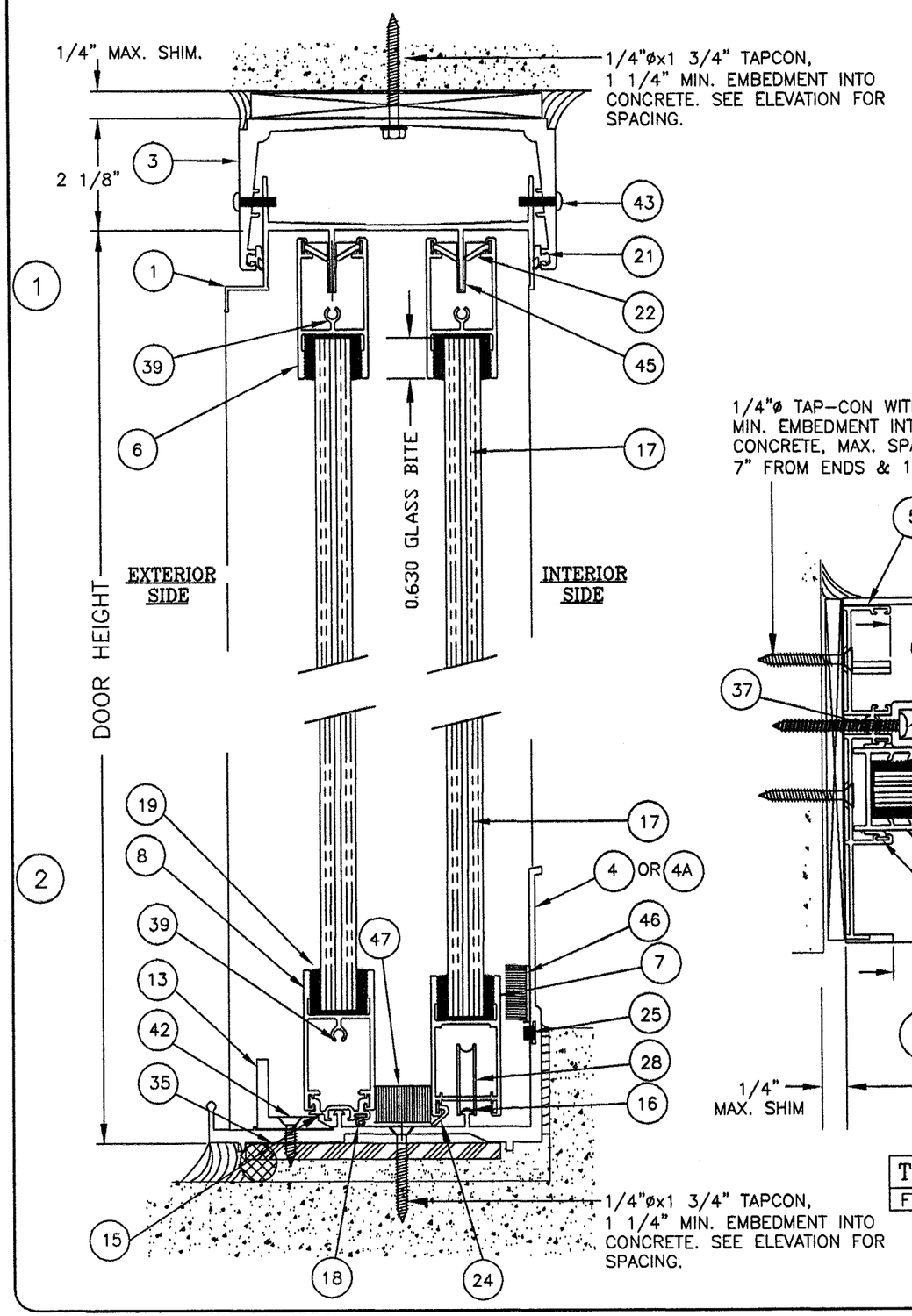

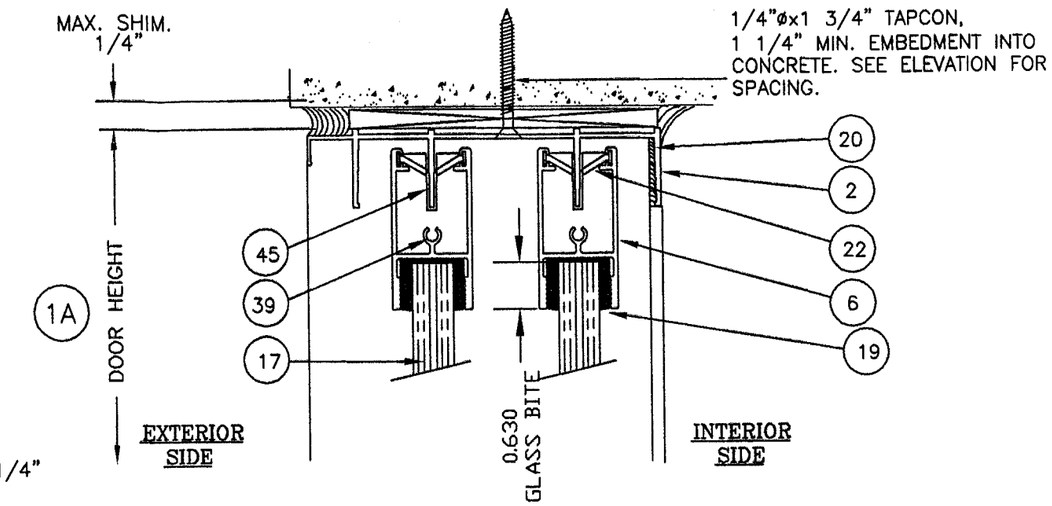

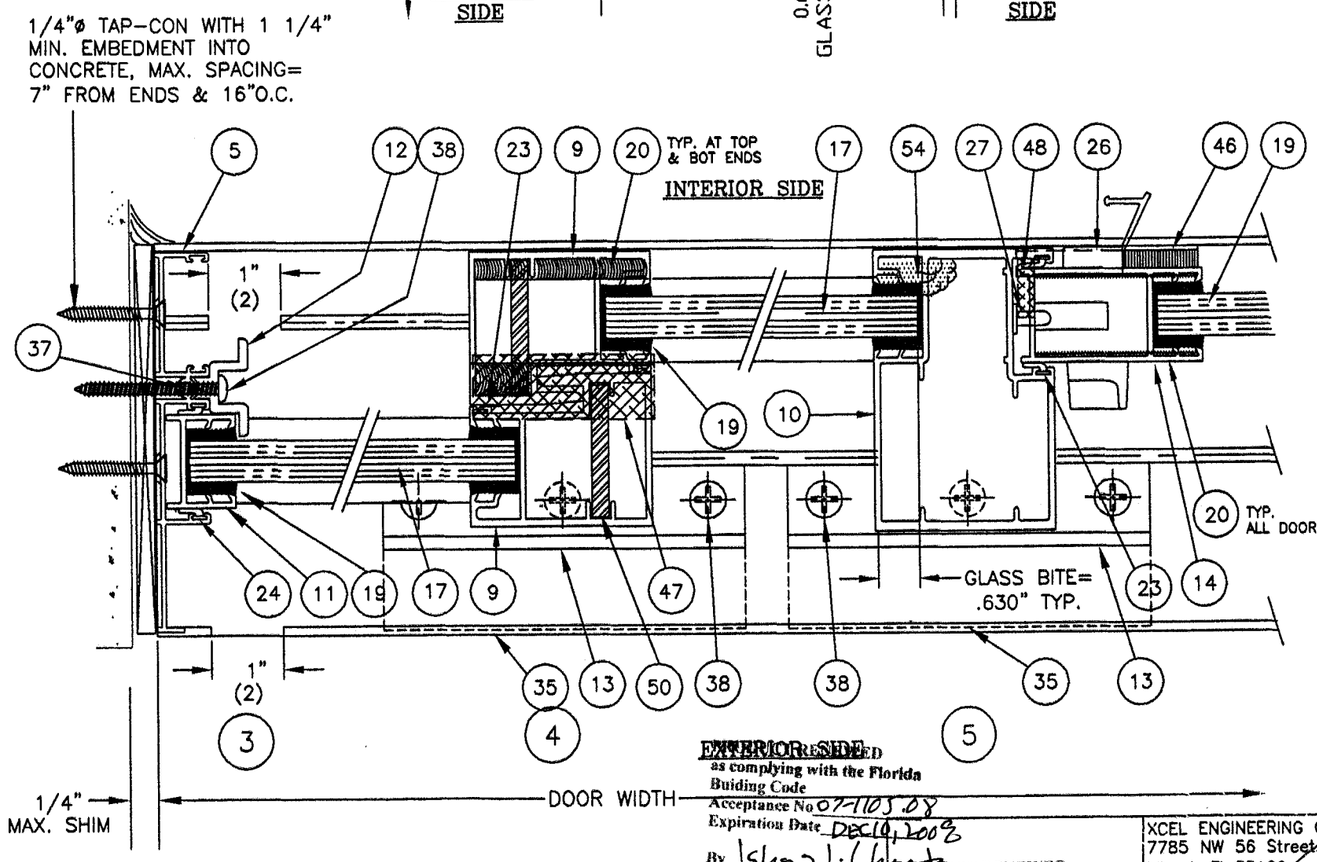

TEST #	DESIGNATION	D.P.(PSF)		W.P.
FTL# 1782	LIGHT REINFORCEMENT	+73.0	-73.3	16.0 PSF

EXTERIOR SIDE
PRODUCT RENEWED
as complying with the Florida Building Code
Acceptance No. 07-1103.08
Expiration Date DEC 10, 2008
By Sifang J. Chao
Miami Dade Product Control Division

PRODUCT RENEWED
as complying with the Florida Building Code
Acceptance No. 06-1121.17
Expiration Date DEC. 10, 2007
By Manuel Perez
Miami Dade Product Control Division

XCEL ENGINEERING CORP.
7785 NW 56 Street
Miami, Fl 33166
(305) 772 5023
CAN (EB) 9324

DEC 19 2006

Sifang Zhao Fla PE# 50685

Miami Wall Systems, Inc.
701 West 25th street
Hialeah, Florida. 33010
Phone:(305) 888-2300 Fax:(305) 888-3058

SGD SERIES 100
STANDARD INSTALLATION DETAILS
LIGHT REINFORCEMENT

NO.	DATE	REVISION
1	11/13/06	UPDATE TO 2004 BUILDING CODE
2	12/19/06	PER BOCO COMMENTS

DATE: 09/22/98
SCALE: 1/2"=1'-0"
DWG. BY: L.G.
CHK. BY:
DWG NO.: MWS-100
SHEET 3 OF 8

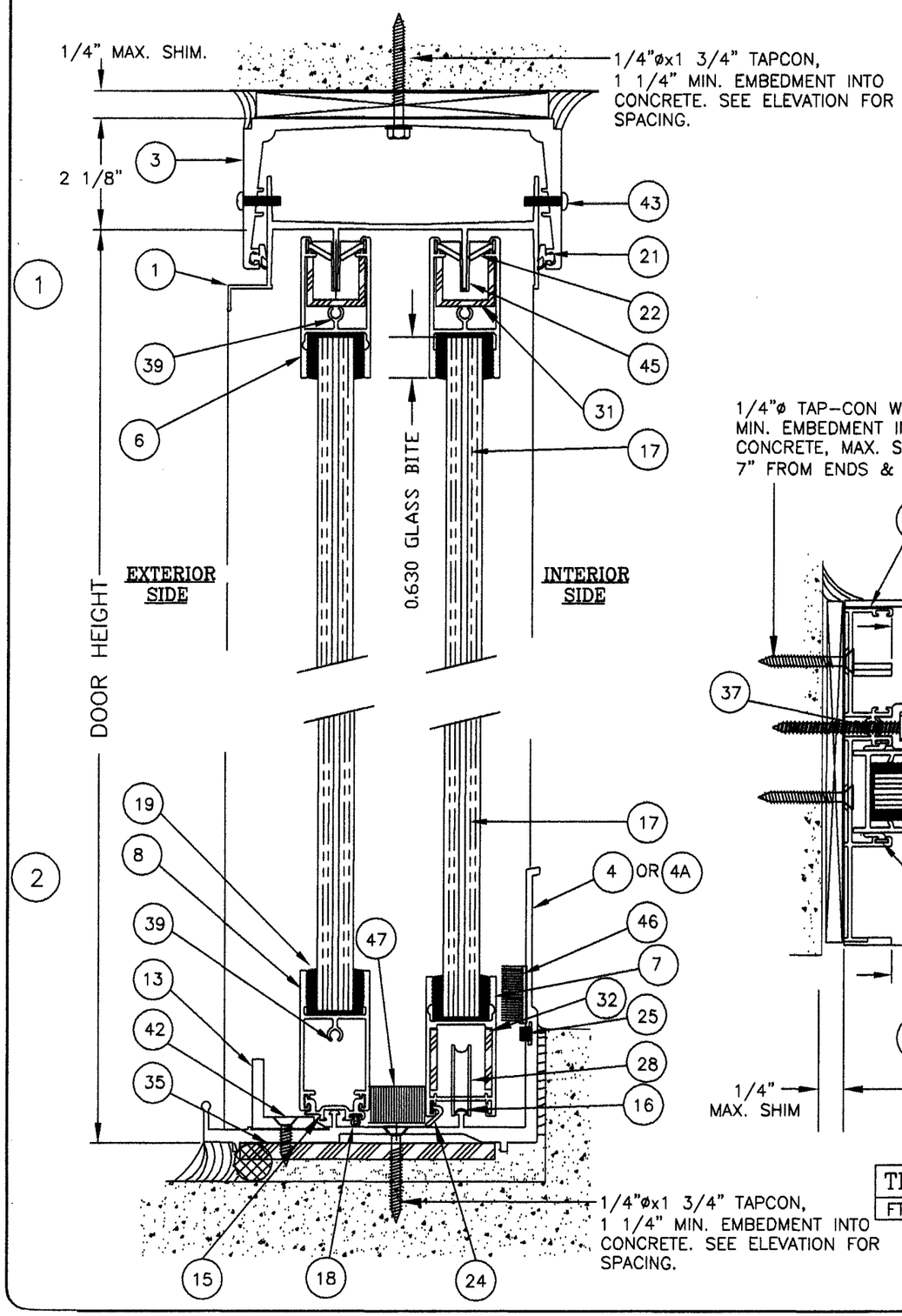

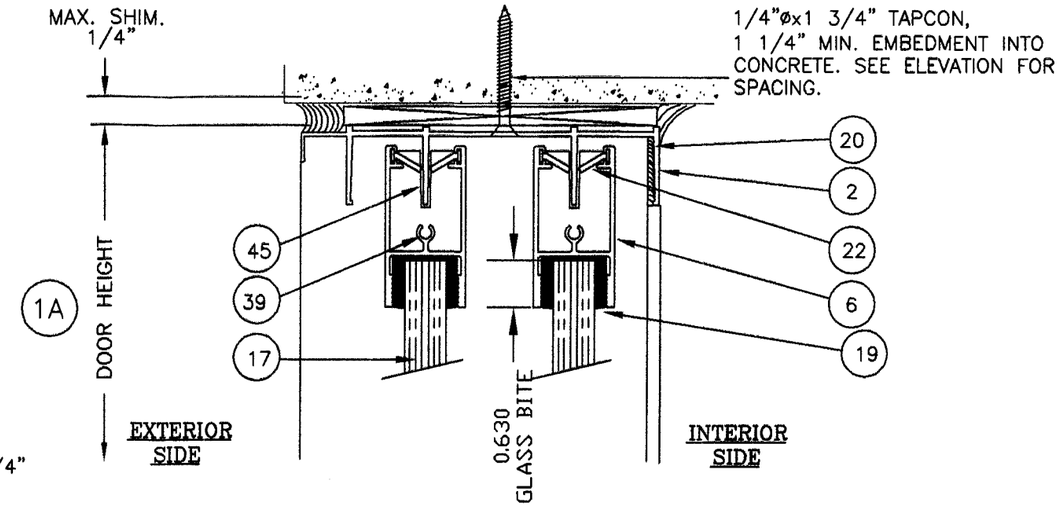

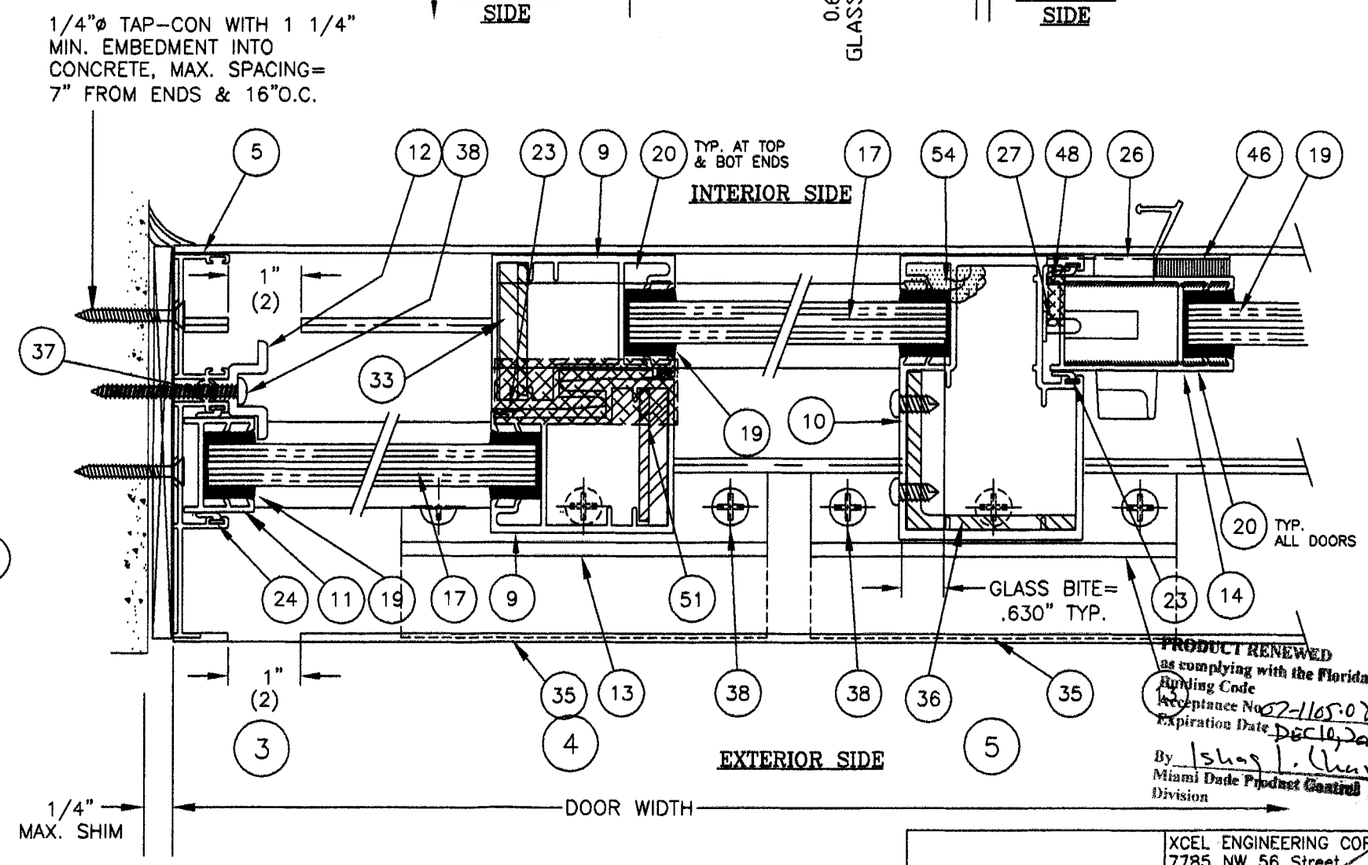

TEST #	DESIGNATION	D.P.(PSF)		W.T.P.
FTL# 1776	MED. REINFORCEMENT	+85.3	-85.3	16.0 PSF

PRODUCT RENEWED
as complying with the Florida Building Code
Acceptance No. 06-1121.17
Expiration Date DEC. 10, 2007
By Manuel Perez
Miami Dade Product Control Division

PRODUCT RENEWED
as complying with the Florida Building Code
Acceptance No. 07-1105.08
Expiration Date DEC 10, 2008
By Ishaq I. Chunara
Miami Dade Product Control Division

XCEL ENGINEERING CORP.
7785 NW 56 Street
Miami, Fl 33166
(305) 772 5023
CAN (EB) 9324

DEC 19 2006

Sifang Zhao Fla PE# 50685

Miami Wall Systems, Inc.
701 West 25th street
Hialeah, Florida. 33010
Phone:(305) 888-2300 Fax:(305) 888-3058

SGD SERIES 100

STANDARD INSTALLATION DETAILS
MEDIUM REINFORCEMENT

NO.	DATE	REVISION
1	11/13/06	UPDATE TO 2004 BUILDING CODE
2	12/19/06	PER BCCO COMMENTS

DATE: 09/22/98
SCALE: 1/2"=1'-0"
DWG. BY: L.G.
CHK. BY:
DWG NO.: MWS-100
SHEET 4 OF 8

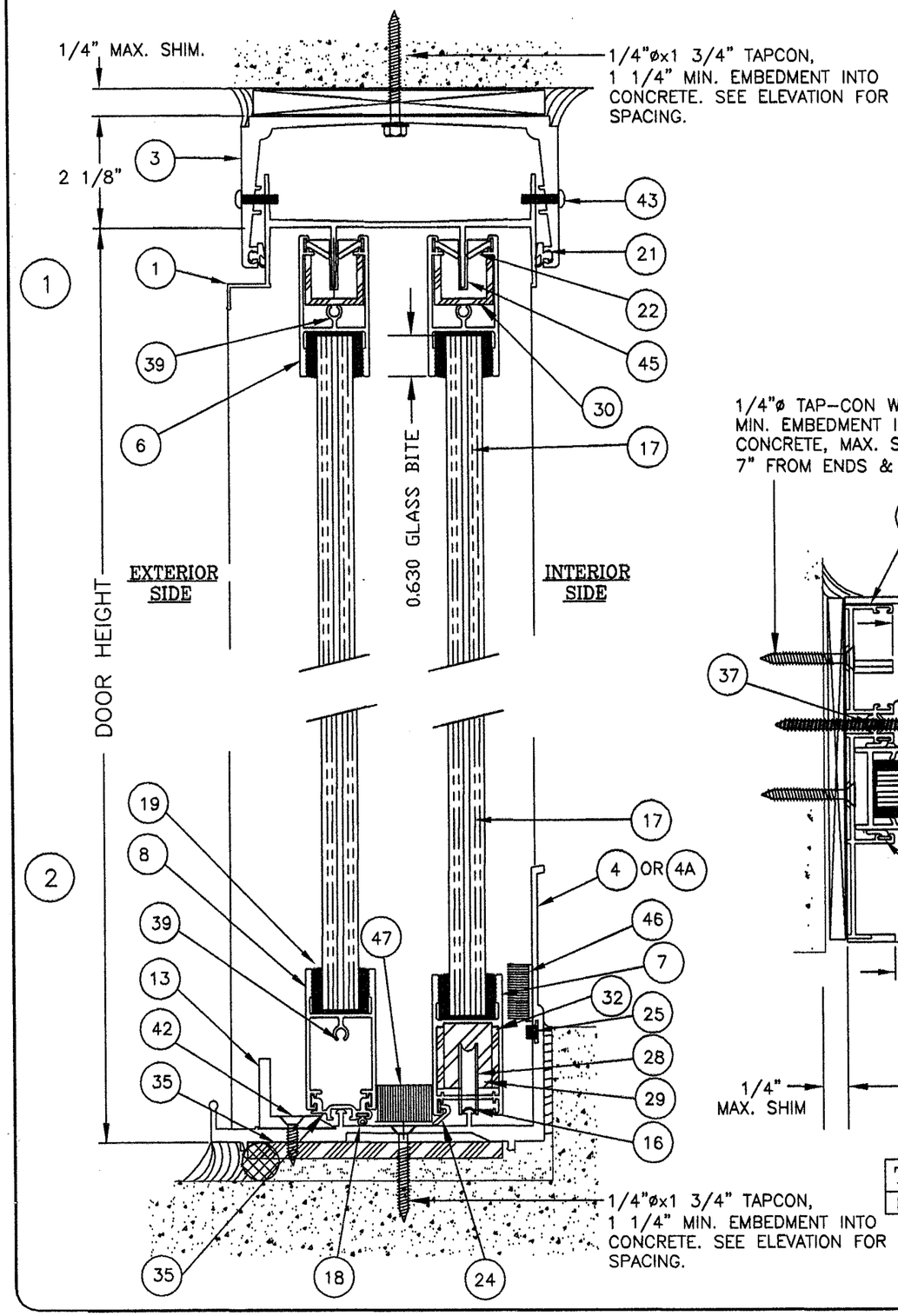

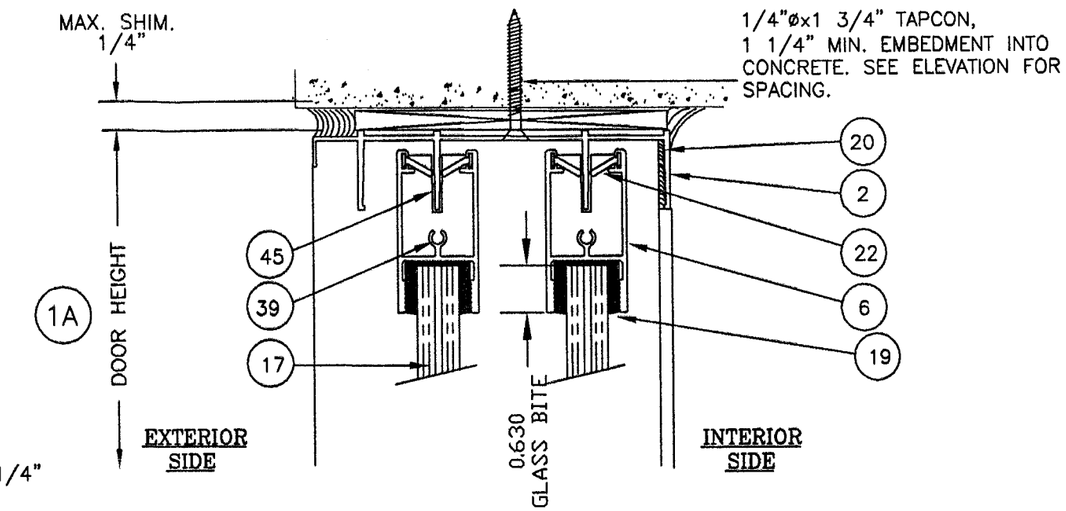

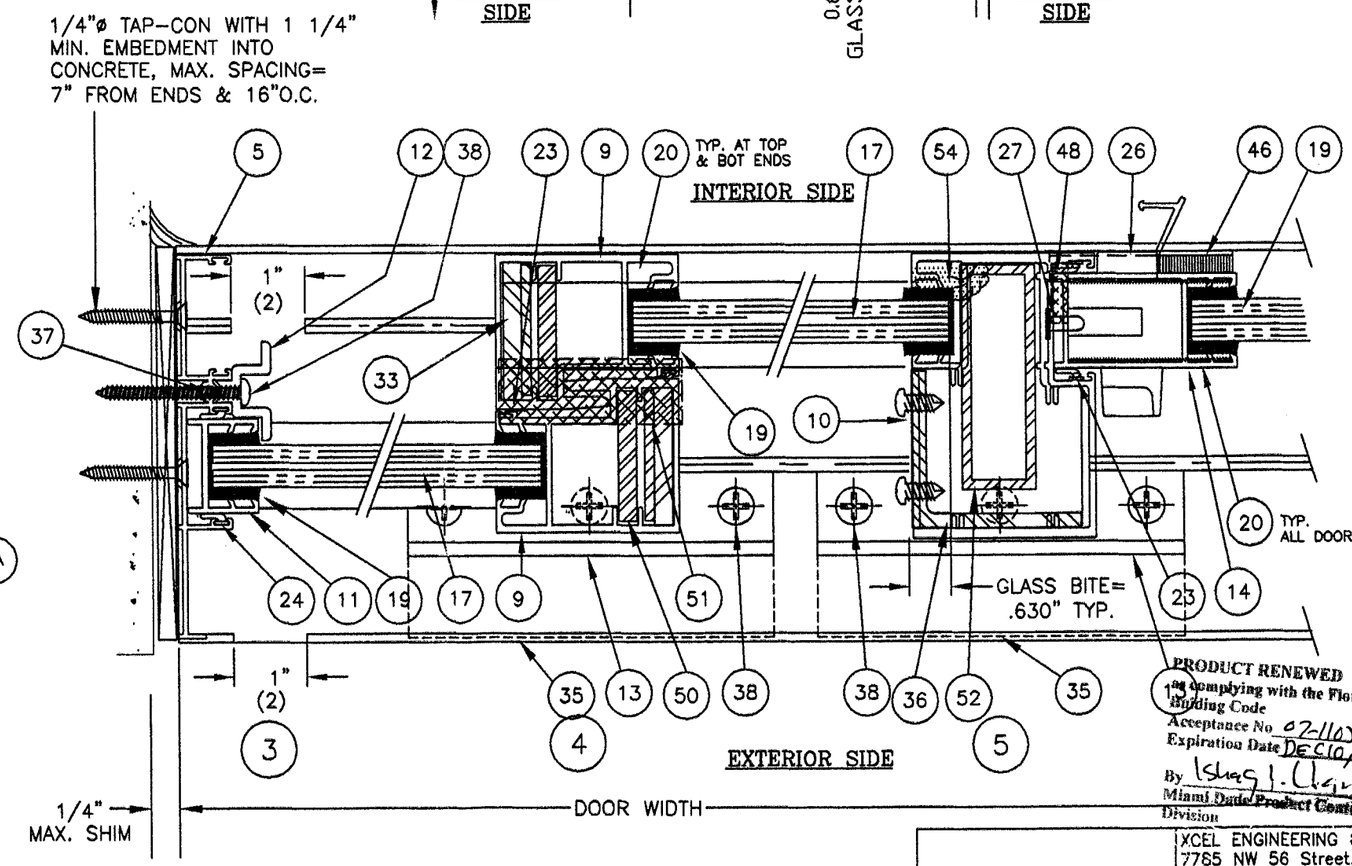

TEST #	DESIGNATION	D.P.(PSF)		W.T.P.
FTL# 1743	HEAVY REINFORCEMENT	+110.0	-110.0	16.0 PSF

PRODUCT RENEWED
as complying with the Florida Building Code
Acceptance No 07-1105.09
Expiration Date DEC 10, 2008
By Ishag I. Ugarte
Miami Dade Product Control Division

PRODUCT RENEWED
as complying with the Florida Building Code
Acceptance No 06-1121.17
Expiration Date DEC 10, 2007
By Manuel Pera
Miami Dade Product Control Division

XCEL ENGINEERING CORP.
7785 NW 56 Street.
Miami, Fl 33166
(305) 772 5023
CAN (EB) 9324

DEC 19 2006

Sifang Zhao Fla PE# 50685

Miami Wall Systems, Inc.
701 West 25th street
Hialeah, Florida. 33010
Phone:(305) 888-2300 Fax:(305) 888-3058

SGD SERIES 100
STANDARD INSTALLATION DETAILS
HEAVY REINFORCEMENT

NO.	DATE	REVISION
1	11/13/06	UPDATE TO 2004 BUILDING CODE
2	12/19/06	PER BCCO COMMENTS

DATE: 09/22/98
SCALE: 1/2"=1'-0"
DWG. BY: L.G.
CHK. BY:
DWG NO.: MWS-100
SHEET 5 OF 8

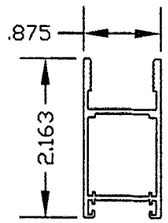

MOV. BOTTOM RAIL
DIE# 100-032
MATERIAL: ALUMINUM
ALLOY: 6063-T6
TIPICAL WALL: 0.062

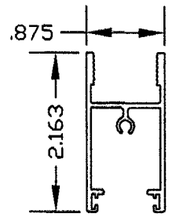

FXD. BOTTOM RAIL
DIE# 100-033
MATERIAL: ALUMINUM
ALLOY: 6063-T6
TIPICAL WALL: 0.062

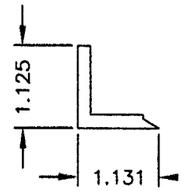

TRACK CLIP
DIE# 100-028
MATERIAL: ALUMINUM
ALLOY: 6005-T5
TIPICAL WALL: 0.178-0188

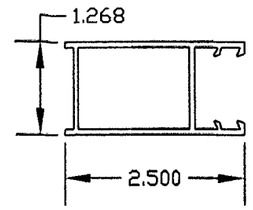

LOCK STILE
DIE #100-030
MATERIAL: ALUMINUM
ALLOY: 6063-T6
TIPICAL WALL: 0.062

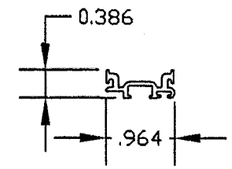

TRACK ADAPTER
DIE #100-003
MATERIAL: ALUMINUM
ALLOY: 6063-T6
TIPICAL WALL:.062

DWG.No.	DESIGNATION	REINFORCEMENT	LOCATION	TEST REPORT	DESIGN PRESSURE
MWS-100, SHEET 2	NO REINFORCEMENT	NONE	NONE	FTL #1797	+63.3 psf, -63.3 psf
MWS-100, SHEET 3	LIGHT REINFORCEMENT	1/4" STEEL BAR	EACH INTERLOCK	FTL #1782	+73.0 psf, -73.0 psf
MWS-100, SHEET 4	MEDIUM REINFORCEMENT	3/8" STEEL BAR	EACH INTERLOCK	FTL #1776	+85.3 psf, -85.3 psf
MWS-100, SHEET 5	HEAVY REINFORCEMENT	1/4 & 3/8" STEEL BARS	EACH INTERLOCK	FTL #1743	+110 psf, -110 psf
		1X3XHT.X1/8THK. STEEL TUBE	FEM. ASTRAGAL		
		7/8x3/4x7/8x1/8" ALUM. CHANNEL	TOP RAILS		
		3/4x1" STEEL BAR	MOV. BOTTOM RAILS		

NOTES:

1) POSITIVE DESIGN PRESSURE LIMITED BY WATER INFILTRATION TEST AT 16.0 PSF.
2) NUMBER OF ANCHOR CALCULATED NOT TO EXCEED AVERAGE SPACING ON TEST UNIT.
3) CALCULATION ARE BASE ON NOMINAL PANEL WIDTH AND ACTUAL PANEL HEIGHT.

PRODUCT RENEWED
as complying with the Florida
Building Code
Acceptance No 07-1105.08
Expiration Date DEC 10 2008
By
Miami Dade Product Control
Division

PRODUCT RENEWED
as complying with the Florida
Building Code
Acceptance No 06-1121.17
Expiration Date DEC. 10, 2008
By
Miami Dade Product Control
Division

XCEL ENGINEERING CORP.
7785 NW 56 Street.
Miami, Fl 33166
(305) 772 5023
CAN (EB) 9324

DEC 19 2006

Sifang Zhao Fla PE# 50685

Miami Wall Systems, Inc.
701 West 25th street
Hialeah, Florida. 33010
Phone:(305) 888-2300 Fax:(305) 888-3058

SGD SERIES 100

STANDARD INSTALLATION DETAILS
INSTAL. FASTENER CHART

NO.	DATE	REVISION
1	11/13/06	UPDATE TO 2004 BUILDING CODE
2	12/19/06	PER BCCO COMMENTS

DATE: 09/22/98
SCALE: 1/2"=1'-0"
DWG. BY: L.G.
CHK. BY:
DWG NO.: MWS-100
SHEET 6 OF 8

ITEM NO.	PART NO.	REQ'D	PART NAME	REMARKS
1	100-021	1	FRAME HEAD FOR RECEPTOR	FRAME
2	100-018	1	FRAME HEAD W/SCREEN	FRAME (ALTERNATE)
3	100-010	1	FRAME RECEPTOR	FRAME
4	100-016	1	FRAME SILL	FRAME
4A	100-045	1	FRAME SILL	FRAME
5	100-019	2	FRAME JAMB	FRAME
6	100-033	4	TOP RAIL	PANEL
7	100-032	2	BOTTOM RAIL, MOVING	PANEL
8	100-033	2	BOTTOM RAIL, FIXED	PANEL
9	100-029	4	INTERLOCK STILE	PANEL
10	100-031	1	FEMALE ASTRAGAL	PANEL
11	100-034	2	FIXED JAMB STILE	FIXED PANEL
12	100-020	4	JAMB STILE RETAINER CLIP	FXD. JAMB @3 1/2" FROM ENDS
13	100-028	3	TRACK CLIP	ASTRAGAL & INTRLK'S
14	100-030	1	LOCK STILE	PANEL
15	100-003	2	TRACK ADAPTER	
16	TYPE 1	1	JOHSON BROS., S.S. TRACK CAP	FRAME SILL
17		4	9/16" LAMI.	1/4TEMP./.060 PVB/1/4"TEMP.
18	G-131	AS REQ'D	PROTOTYPE, PLS. VINYL FLAP	BOT. RAIL PANELS, SINGLE ROW
19	G-116	AS REQ'D	PROTOTYPE, GLAZING VINYL	PANELS/GLASS
20	GE 1200	AS REQ'D	SEALANT	PANELS & FR. CORNERS
21	G-117	AS REQ'D	BULB VINYL, PROTOTYPE PLAST.	HD RECEPTOR, DOUBLE ROW
22	G-127	AS REQ'D	DS. BROWN, VINYL FLAP	TOP RAILS, DOUBLE ROW
23	G-115A	AS REQ'D	PROTOTYPE PLS., FLAP VINYL	INTERLOCK STILES, SINGLE ROW
24	G-115A	AS REQ'D	PROTOTYPE PLS., FLAP VINYL	FRAME JAMB, DOUBLE ROW
25	7450-6011-4	AS REQ'D	FIN SEAL PILE SCHELEGEL	FRAME SILL, SINGLE ROW
26	1A-003B-01	1	DNS LOCK\HANDEL ASSY	CRESTLINE
27		1	DNS STEEL KEEPER	FEMALE ASTG. STILE
28	#4284	4	DELMAR TANDEM WHEELS	MOV. BOT. RAILS
29		2	STL BAR, 3/4'x1"	MOV. BOTOM RAILS(H. REINF'T)
30		4	AL. CHANEL, 7/8"x1"x7/8"x1/8"	TOP RAIL, PANELS.(H. REINF'T)
31		2	AL. CHANEL, 3/4"x1"x3/4"x1/8"x4'	LCKST'L, TOP RAIL END(M. REINF'T)
32		4	AL. PLATE, 15/16x.108x2 1/8"	LCKST'L ENDS, PANELS.**
33		4	AL. BAR, 1.844x1/4"x4"	ENDS INTRLCK'S, PANELS.**
34		4	AL. BAR, 1/4x1-7/8x4"LG.	BOTTOM RAIL AND LOCKSTILE
35		3	AL. PLATE 1/4"x4"x6"LG.	FR. SILL AT INTRLK/ASTRGL
36		1	AL ANGLE @ BOT OF FEM ASTRAGAL	2 5/16X2 1/8X12X1/4 THK.
37		4	#10x1" PH SMS SS	FRAME CORNERS (ASSY SCRW)
38		4	#10x2 1/2" PH SMS	FX'D JAMB, W/ITEM#12
39		16	#10x1" PH SMS SS	PANEL CORNERS (ASSY SCRW)
40		4	#10-32x1/2" PH SMS SS	BOT. LCKST'L W/ITEM#32(H REINF'T)
41		1	1/4"-20x3/4" FH SMS SS	BOT END ASTRAGAL(INTERIOR)
42		9	1/4"-20x1/2" PH SMS SS	FR SILL W/ITEM#13
43		6	#14x1" PH SMS SS	HD. RECETOR INTRLCK/ASTRAGAL
44				
45	#100-5	8	PLASTIC GUIDE	M+M PLASTICS, TOP RAIL
46		8	PAD PILE, 1/2x1 3/4x2 1/2"	ULTRA-PLUG,FR. SILL LOCK STILE
47		2	PAD PILE, 7/8x2 1/2x5/8"	SILL, BELOW INTERLOK
48		1	CLS'D CELL PAD, 1/2x8 1/2x1/4"	AT SILL UDER FEM ASTRAGAL
49				
50		4	STL BAR, 1/4'x1 3/4"	AT INTERLOCK STILE *
51		4	STL BAR, 3/8'x1 3/4"	AT INTERLOCK STILE **
52		1	STL TUBE 1X3XHT.X1/8 THK.	AT ASTRAGAL STILE
53				
54		AS REQ'D	EXP. FOAM, GREAT-STUFF	AT TOP & BOT. OF ASTRAGALS
55				

NOTES:
1. **BOTH REINFORCEMENTS MED.&HEAVY
2. *BOTH REINFORCEMENTS MED.&HEAVY
3. AT EA. SET OF INTERLOCKS & ASTRAGAL
4. AT EA. SET OF INTERLOCKS & ASTRAGAL

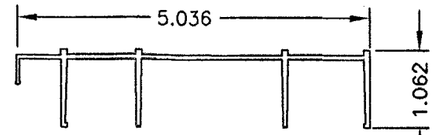

HEAD TRACK DIE# 100-018
MATERIAL: ALUMINUM
ALLOY: 6005-T5
TIPICAL WALL:.080-.125

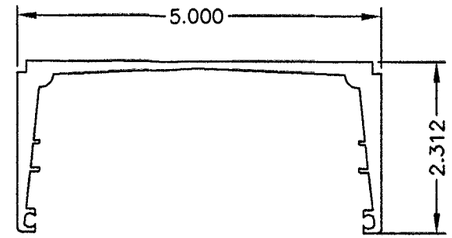

HEAD RECEPTOR DIE# 100-010
MATERIAL: ALUMINUM
ALLOY: 6005-T5
TIPICAL WALL:.100"-.188"

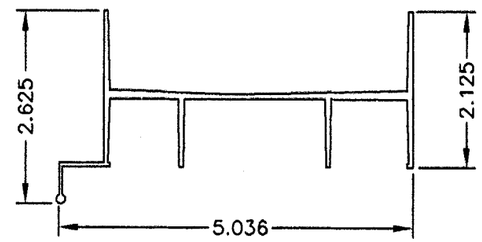

HEAD TRACK DIE #100 021
(FOR RECEPTOR AND RECEPTOR)
MATERIAL: ALUMINUM
ALLOY: 6005-T5
TIPICAL WALL:.080-.125

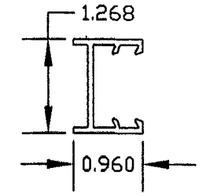

FIXED JAMB STILE
DIE #100-034
MATERIAL: ALUMINUM
ALLOY: 6063-T6
TIPICAL WALL:.075

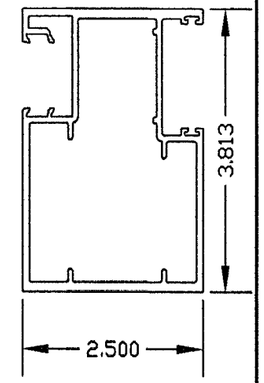

FEM. ASTRAGAL
DIE #100-031
MATERIAL: ALUMINUM
ALLOY: 6005-T5
TIPICAL WALL:.078

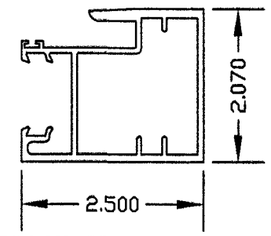

INTERLOCK STILE DIE# 100-029
MATERIAL: ALUMINUM
ALLOY: 6005-T5
TIPICAL WAL:.078"

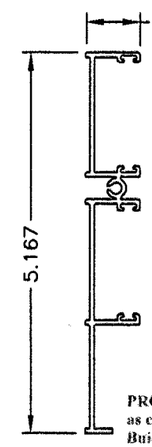

FRAME JAMB
DIE#100-019
MATERIAL: ALUMINUM
ALLOY: 6063-T6
TIPICAL WALL:.062

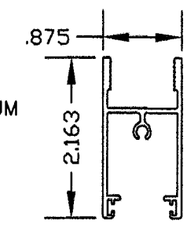

TOP RAIL
DIE# 100-033
MATERIAL: ALUMINUM
ALLOY: 6063-T6
TIPICAL WALL:.062

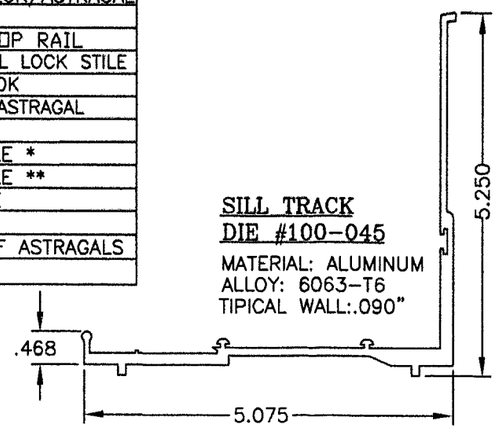

SILL TRACK
DIE #100-045
MATERIAL: ALUMINUM
ALLOY: 6063-T6
TIPICAL WALL:.090"

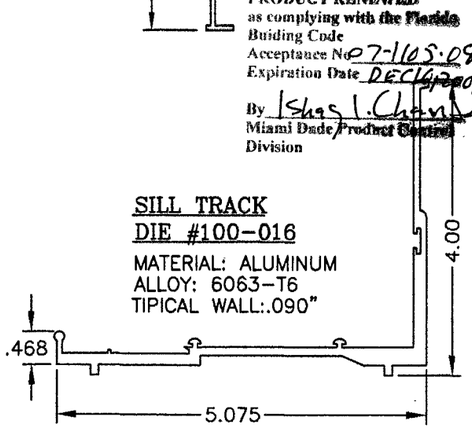

SILL TRACK
DIE #100-016
MATERIAL: ALUMINUM
ALLOY: 6063-T6
TIPICAL WALL:.090"

PRODUCT RENEWED
as complying with the Florida
Building Code
Acceptance No 07-1105.05
Expiration Date DEC 14 2008
By Shas I. Chang
Miami Dade Product Control
Division

PRODUCT RENEWED
as complying with the Florida
Building Code
Acceptance No 06-1121.17
Expiration Date DEC. 10, 2007
By Manuel Perez
Miami Dade Product Control
Division

XCEL ENGINEERING CORP.
7785 NW 56 Street.
Miami, Fl 33166
(305) 772 5023
CAN (EB) 9524

DEC 19 2006

Sifang Zhao Fla PE# 50685

Miami Wall Systems, Inc.
701 West 25th street
Hialeah, Florida. 33010
Phone:(305) 888-2300 Fax:(305) 888-3058

SGD SERIES 100

BILL OF MATERIAL
EXTRUSION SUMMARY

NO.	DATE	REVISION
1	11/13/06	UPDATE TO 2004 BUILDING CODE
2	12/19/06	PER BCDD COMMENTS

DATE: 09/22/98
SCALE: 1/2"=1'-0"
DWG. BY: L.G.
CHK. BY:
DWG NO.: MWS-100
SHEET 7 OF 8

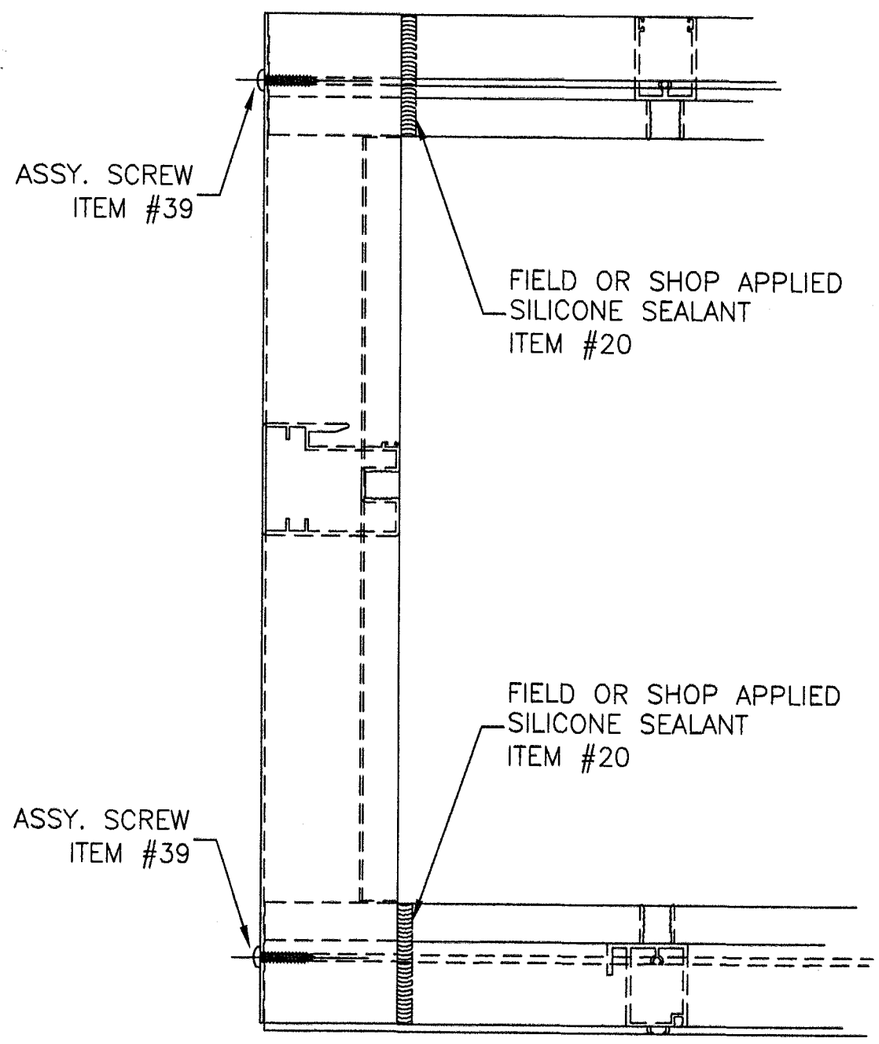

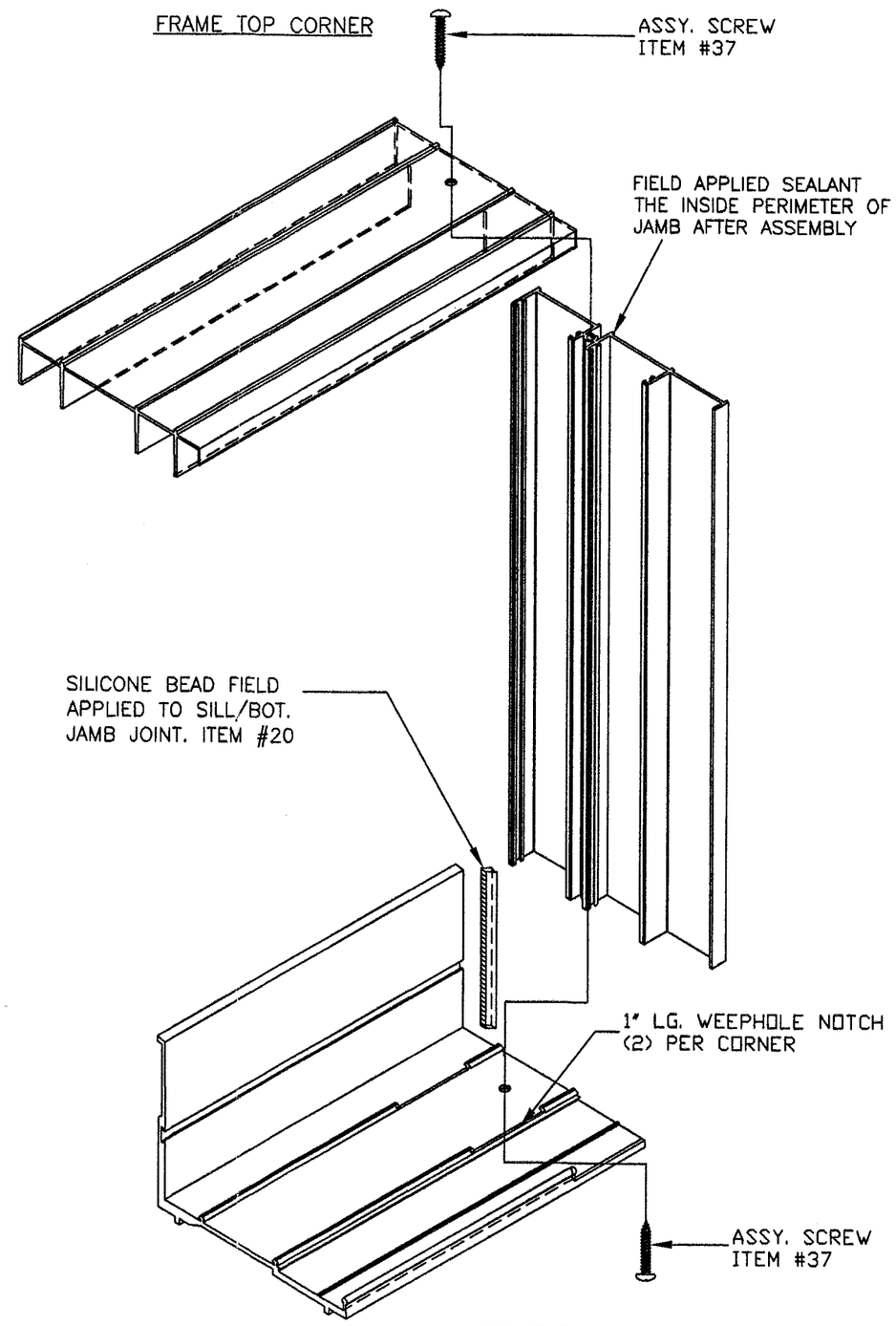

Miami Wall Systems, Inc.
701 West 25th street
Hialeah, Florida. 33010
Phone:(305) 888-2300 Fax:(305) 888-3058

SGD SERIES 100

STANDARD CORNER DETAILS

PRODUCT RENEWED
as complying with the Florida Building Code
Acceptance No 07-1105.08
Expiration Date DEC 10, 2009
By Ishag I. Lhamde
Miami Dade Product Control Division

PRODUCT RENEWED
as complying with the Florida Building Code
Acceptance No 06-1121.17
Expiration Date DEC. 10, 2007
By Manuel Perez
Miami Dade Product Control Division

XCEL ENGINEERING CORP.
7785 NW 56 Street.
Miami, Fl 33166
(305) 772 5023
CAN (EB) 9324

DEC 19 2006

Sifang Zhao Fla PE# 50685

NO.	DATE	REVISION
1	11/13/06	UPDATE TO 2004 BUILDING CODE
2	12/19/06	PER BCCO COMMENTS

DATE: 09/22/98
SCALE: 1/2"=1'-0"
DWG. BY: L.G.
CHK. BY:
DWG NO.: MWS-100
SHEET 8 OF 8