MIAMI-DADE COUNTY

BUILDING CODE COMPLIANCE OFFICE (BCCO)
PRODUCT CONTROL DIVISION

MIAMI-DADE COUNTY, FLORIDA
METRO-DADE FLAGLER BUILDING
140 WEST FLAGLER STREET, SUITE 1603
MIAMI, FLORIDA 33130-1563
(305) 375-2901 FAX (305) 375-2908
www.buildingcodeonline.com

NOTICE OF ACCEPTANCE (NOA)

Miami Wall Systems, Inc.
701 West 25 Street
Hialeah, FL 33010

SCOPE:
This NOA is being issued under the applicable rules and regulations governing the use of construction materials. The documentation submitted has been reviewed by Miami-Dade County Product Control Division and accepted by the Board of Rules and Appeals (BORA) to be used in Miami Dade County and other areas where allowed by the Authority Having Jurisdiction (AHJ).

This NOA shall not be valid after the expiration date stated below. The Miami-Dade County Product Control Division (In Miami Dade County) and/or the AHJ (in areas other than Miami Dade County) reserve the right to have this product or material tested for quality assurance purposes. If this product or material fails to perform in the accepted manner, the manufacturer will incur the expense of such testing and the AHJ may immediately revoke, modify, or suspend the use of such product or material within their jurisdiction. BORA reserves the right to revoke this acceptance, if it is determined by Miami-Dade County Product Control Division that this product or material fails to meet the requirements of the applicable building code.

This product is approved as described herein, and has been designed to comply with the Florida Building Code, including the High Velocity Hurricane Zone.

DESCRIPTION: Series "100" Aluminum Sliding Glass Door w/ Steel reinforcement

APPROVAL DOCUMENT: Drawing titled "SGD Series100", sheets 1 through 4 of 4, prepared by Xcel Engineering Corp., dated 08/02/04 and last revised on Dec 06, 2006, signed and sealed by Sifang Zhao, P.E., bearing the Miami-Dade County Product Control Renewal stamp with the Notice of Acceptance number and expiration date by the Miami-Dade County Product Control Division.

MISSILE IMPACT RATING: Large and Small Missile Impact Resistant

LABELING: Each unit shall bear a permanent label with the manufacturer's name or logo, city, state and following statement: "Miami-Dade County Product Control Approved", unless otherwise noted herein.

RENEWAL of this NOA shall be considered after a renewal application has been filed and there has been no change in the applicable building code negatively affecting the performance of this product.

TERMINATION of this NOA will occur after the expiration date or if there has been a revision or change in the materials, use, and/or manufacture of the product or process. Misuse of this NOA as an endorsement of any product, for sales, advertising or any other purposes shall automatically terminate this NOA. Failure to comply with any section of this NOA shall be cause for termination and removal of NOA.

ADVERTISEMENT: The NOA number preceded by the words Miami-Dade County, Florida, and followed by the expiration date may be displayed in advertising literature. If any portion of the NOA is displayed, then it shall be done in its entirety.

INSPECTION: A copy of this entire NOA shall be provided to the user by the manufacturer or its distributors and shall be available for inspection at the job site at the request of the Building Official.

This NOA **renews NOA # 06-1121.18** consists of this page 1 and evidence page E-1, as well as approval document mentioned above.
The submitted documentation was reviewed by **Ishaq I. Chanda, P. E.**

8
11/19/17

NOTICE OF ACCEPTANCE: EVIDENCE SUBMITTED

A. DRAWINGS (transferred from file # **06-1121.18**)

1. Manufacturer's die drawings and sections.
2. Drawing titled "SGD Series100", sheets 1 through 4 of 4, prepared by Xcel Engineering Corp., dated 08/02/04 and last revised on Dec 06, 2006, signed and sealed by Sifang Zhao, P.E.

B. TESTS (transferred from file **# 06-1121.18**)

1. Test reports on 1) Air Infiltration Test, per FBC, TAS 202-94
   2) Uniform Static Air Pressure Test, Loading per FBC, TAS 202-94
   3) Water Resistance Test, per FBC, TAS 202-94
   4) Forced Entry Test, per FBC 2411 3.2.1 and TAS 202-94
   5) Large Missile Impact Test per FBC, TAS 201-94
   6) Cyclic Wind Pressure Loading per FBC, TAS 203-94

Along with marked-up drawings and installation diagram of an Aluminum Sliding Glass Door, prepared by Fenestration Testing Laboratory, Inc., Test Report No. **FTL-2841**, dated August 20, 2000 and Test Reports No. **FTL-1405**, dated April 12, 1996 and **FTL-1445**, dated December 22, 2000, signed and sealed by Edmundo Largaespada, P.E. and Antonio Acevedo, P. E. , respectively.

C. CALCULATIONS

1. Anchor verification calculation, complying w/ FBC 2004, prepared by Xcel Engineering Corporation dated 11-12-06, signed and sealed by Sifang Zhao, P.E.
2. Glazing complies with ASTME-1300-98 & -02.

D. QUALITY ASSURANCE

1. Miami Dade Building Code Compliance Office (BCCO).

E. MATERIAL CERTIFICATIONS

1. Notice of Acceptance No. **05-1208.02** issued to DuPont DeNeumours, Inc. for their "Butacite PVB Interlayer", expiring on 12/11/10.
2. Notice of Acceptance No. **04-0818.01** issued to DuPont DeNeumours, Inc. for their "Sentry Glas Plus", expiring on 01/14/08.
3. Notice of Acceptance No. **02-0916.04** issued to Viracon, Inc. for their "Storm Guard (Laminate)", expiring on 04/14/08.

F. **STATEMENTS**

1. Testing agreement letter dated 10-08-07 between Fenestration Testing Lab(FTL) & Miami Wall Sys, issued by FTL
2. Statement letter of compliance w/FBC-2004 and "No financial interest", signed by Sifang Zhao, P.E.
3. Lab compliance statements, part of above referenced test reports.

G. OTHER

1. This NOA **renews # 06-1121.18** expiring on December 20, 2007.
2. One year conditional approval, subjected to successful verification test.

Ishaq I. Chanda

Ishaq I. Chanda, P. E.
Product Control Examiner
NOA No 07-1105.09
Expiration Date: December 20, 2008
Approval Date: December 13, 2007

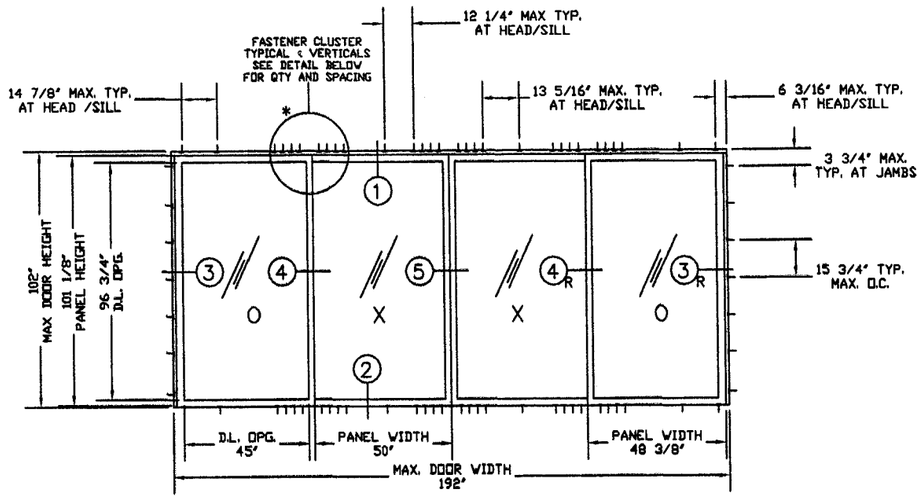

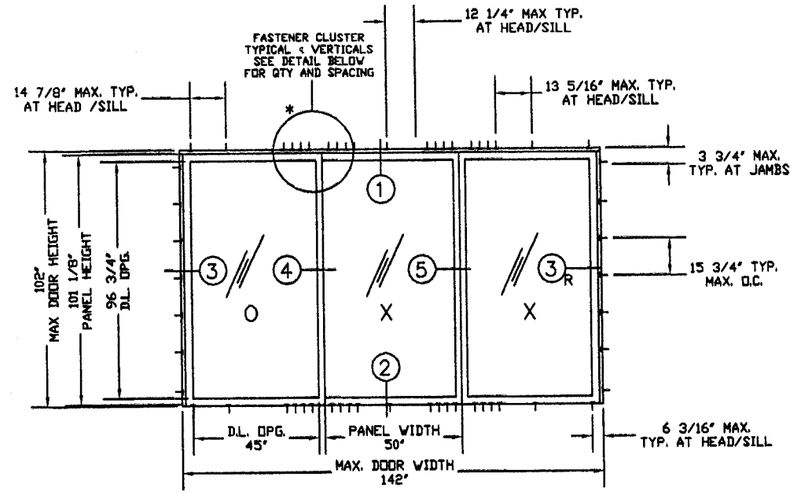

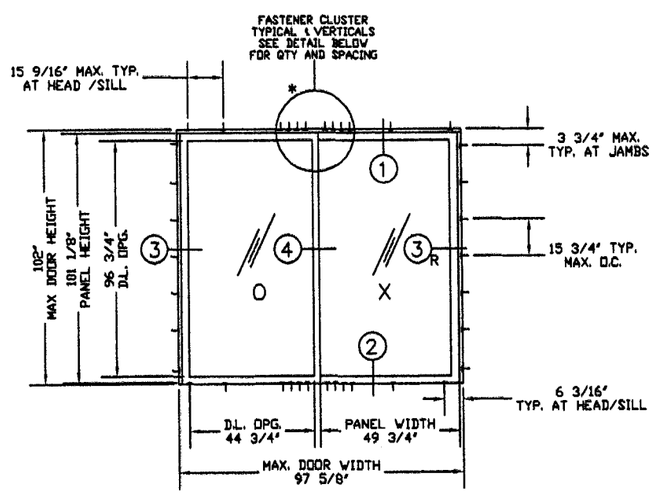

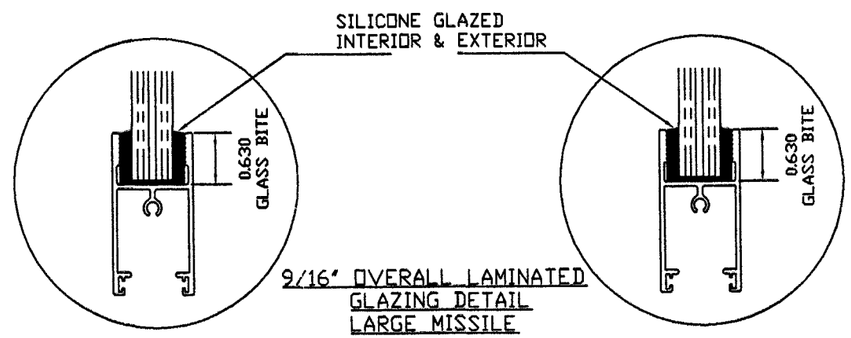

9/16" OVERALL LAMINATED GLAZING DETAIL LARGE MISSILE

GLASS TYPE

(A) 1/4"HEAT STR. GLASS
.090" SENTRY GLASS PLUS BY DUPONT
1/4"HEAT STR. GLASS

(B) 1/4"HEAT STR. GLASS
.100" STORMGUARD BY VIRACON
1/4"HEAT STR. GLASS

GLASS TYPE

(C) 1/4"HEAT STR. GLASS
.090" BUTACITE PVB BY DUPONT
1/4"HEAT STR. GLASS

PRODUCT RENEWED
as complying with the Florida Building Code
Acceptance No 07-1105.09
Expiration Date DEC 20, 2008
By Ishaq I. Chanda
Miami Dade Product Control Division

DESIGN PRESSURE RATING WITH REINFORCEMENTS		
GLAS TYPE: A & B	100.0 PSF POSITIVE	100.0 PSF NEGATIVE
GLAS TYPE: C	70.0 PSF POSITIVE	70.0 PSF NEGATIVE

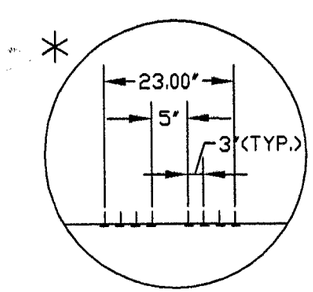

TYPICAL INSTALLATION HOLES CLUSTER
@ ℄ OF ALL VERTICALS. HEAD & SILL.
USE CLUSTER OF (8) FOR 100 PSF
USE CLUSTER OF (6) FOR 70 PSF

GENERAL NOTES:

(1) FRAME HEAD AND SILL USE SAME FASTENER SPACING.
(2) MAX. OPERATING PANEL SIZE: 50 7/16"x101 7/8" MAX. FIXED PANEL SIZE: 49 1/2"x101 1/8"
(3) ALL ANCHORS AT JAMBS ARE DOUBLE ROW.
(4) LARGE MISSILE IMPACT (LMI): UNIT TO BE INSTALLED UP TO 30 FT ABOVE THE GRADE

XCEL ENGINEERING CORP.
7785 NW 56 Street.
Miami, Fl 33166
(305) 772 5023
CAN (EB) 9324

DEC 0 6 2006

Sifang Zhao Fla PE# 50685

PRODUCT RENEWED
as complying with the Florida Building Code
Acceptance No 06-1121.18
Expiration Date DEC 20, 2007
By Ishaq I. Chanda
Miami Dade Product Control Division

Miami Wall Systems, Inc.
701 West 25th street
Hialeah, Florida. 33010
Phone:(305) 888-2300 Fax:(305) 888-3058

SGD SERIES 100

DOOR ELEVATIONS

NO.	DATE	REVISION
1	11/13/06	UPDATE TO 2004 BUILDING CODE

DATE: 08/02/04
SCALE: N.T.S.
DWG. BY: JCALAFAT
CHK. BY:
DWG NO.:
SHEET 1 OF 4

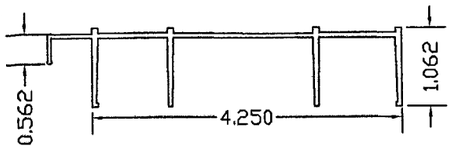

(1) FRAME HEAD
TYP. THK. =0.078" – .120"
MATL (6105–T5)

(2) FRAME SILL
TYP. THK. =.090"
MATL (6063–T6)

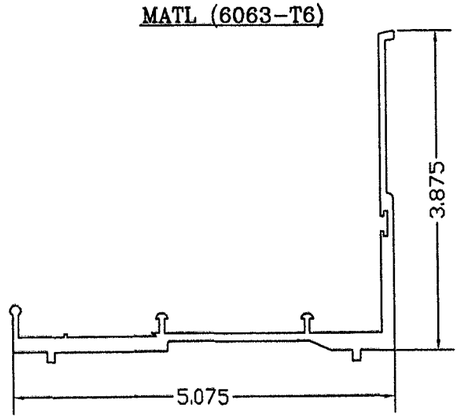

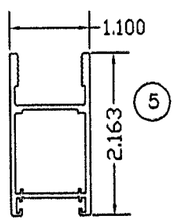

(5) BOTTOM RAIL, MOVING
TYP. THK. =.062"
MATL (6063–T6)

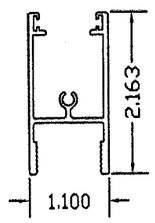

(4) TOP RAIL
(6) BOTTOM RAIL FIXED
TYP. THK. =.062"
MATL (6063–T6)

(11) TRACK CLIP
MATL (6105–T5)

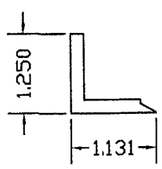

(13) TRACK ADAPTER
MATL (6063–T6)

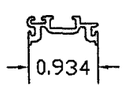

(2A) FRAME SILL
TYP. THK. =.090"
MATL (6063–T6)

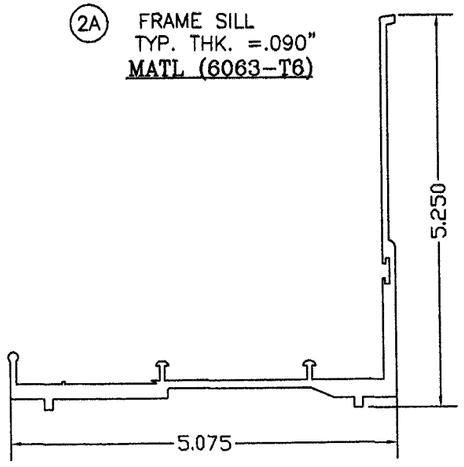

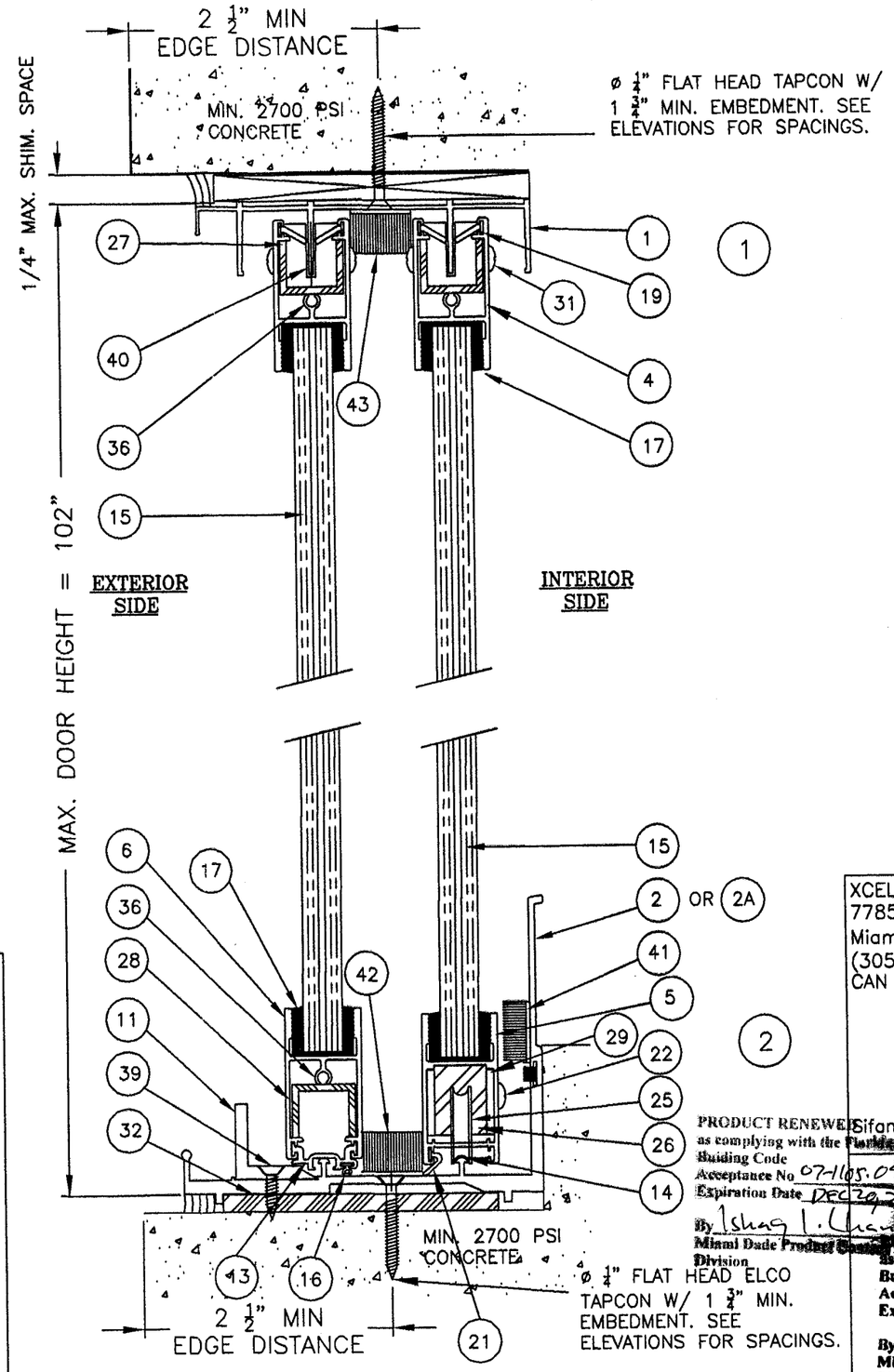

PRODUCT RENEWED
as complying with the Florida
Building Code
Acceptance No 07-1105.09
Expiration Date DEC 20 2008
By Ishaq I. Chanda
Miami Dade Product Control
Division

XCEL ENGINEERING CORP.
7785 NW 56 Street.
Miami, Fl 33166
(305) 772 5023
CAN (EB) 9324

DEC 06 2006
Sifang Zhao Fla PE# 50685

PRODUCT RENEWED
as complying with the Florida
Building Code
Acceptance No 06-1121.18
Expiration Date DEC 20 2007
By Ishaq I. Chanda
Miami Dade Product Control
Division

Miami Wall Systems, Inc.
701 West 25th street
Hialeah, Florida. 33010
Phone:(305) 888-2300 Fax:(305) 888-3058

SGD SERIES 100

STANDARD INSTALLATION DETAILS
HEAVY REINFORCEMENT

NO.	DATE	REVISION
1	11/13/08	UPDATE TO 2004 BUILDING CODE

DATE: 08/02/04
SCALE: N.T.S.
DWG. BY: JCALAFAT
CHK. BY:
DWG NO.:
SHEET 2 OF 4

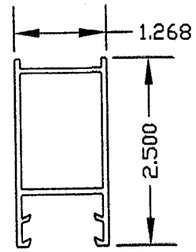

(12) LOCK STILE
TYP. THK. =0.062"
MATL (6063-T6)

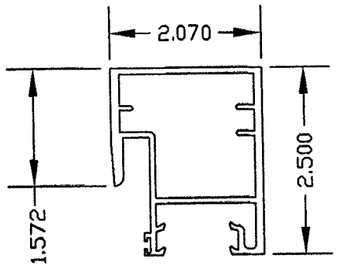

(7) INTERLOCK STILE
TYP. THK. =0.078"
MATL (6105-T5)

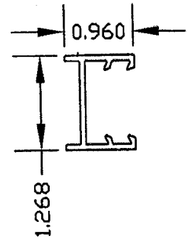

(9) FIXED JAMB STILE
TYP. THK. =0.075"
MATL (6063-T6)

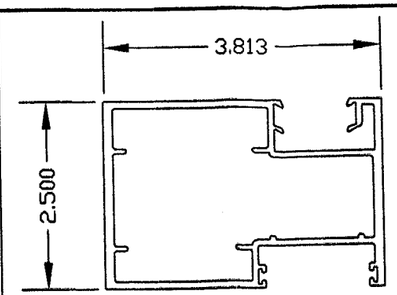

(8) FEMALE ASTRAGAL
TYP. THK. =0.078"
MATL (6063-T6)

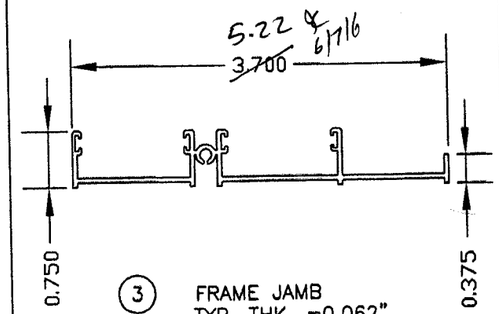

(3) FRAME JAMB
TYP. THK. =0.062"
MATL (6063-T6)

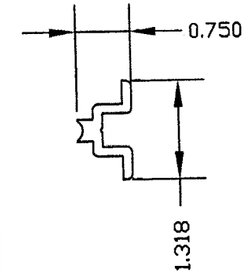

(10) JAMB STILE RETAINER CLIP
MATL (6063-T6)

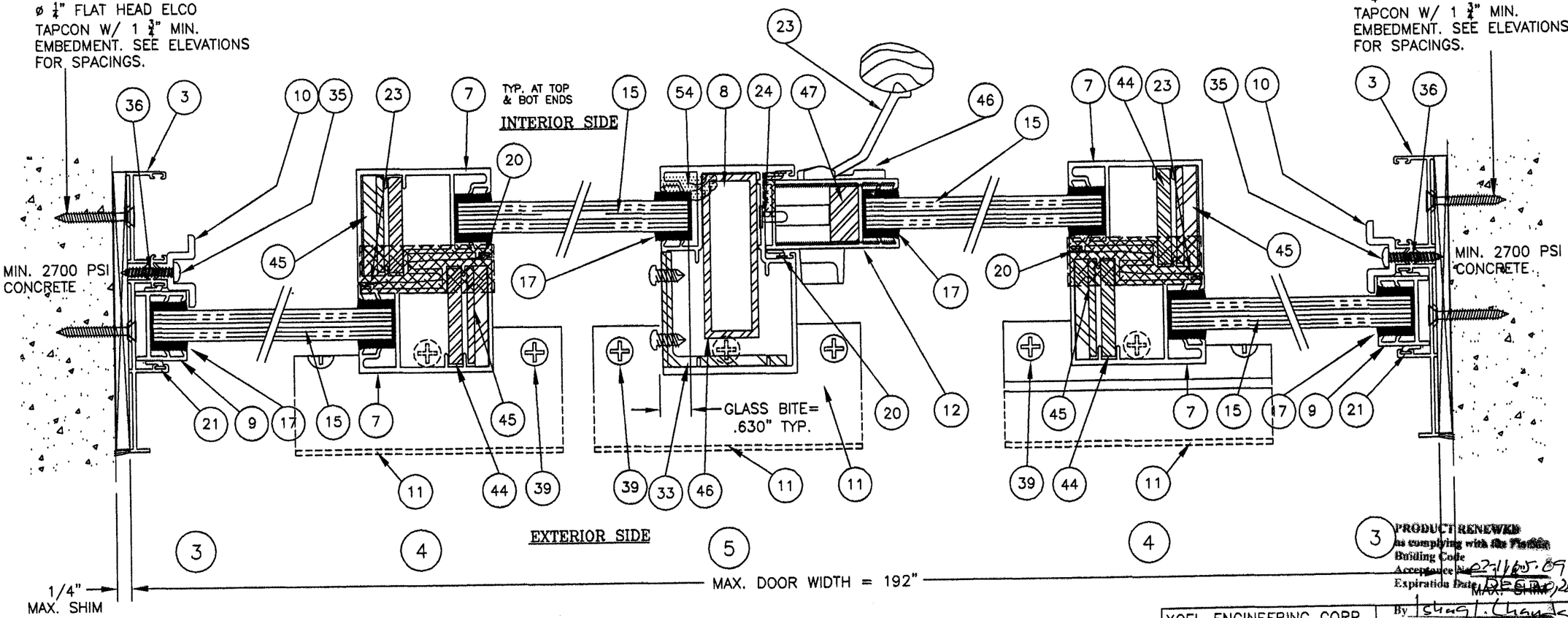

XCEL ENGINEERING CORP.
7785 NW 56 Street.
Miami, Fl 33166
(305) 772 5023
CAN (EB) 9324

DEC 06 2006

Sifang Zhao Fla PE# 50685

PRODUCT RENEWED
as complying with the Florida Building Code
Acceptance No. 02-1105.09
Expiration Date DEC 20 2008
By Ishaq I. Chanda
Miami Dade Product Control Division

PRODUCT RENEWED
as complying with the Florida Building Code
Acceptance No. 06-1121.18
Expiration Date DEC 20 2007
By Ishaq I. Chanda
Miami Dade Product Control Division

Miami Wall Systems, Inc.
701 West 25th street
Hialeah, Florida. 33010
Phone:(305) 888-2300 Fax:(305) 888-3058

SGD SERIES 100
STANDARD INSTALLATION DETAILS
HEAVY REINFORCEMENT

NO.	DATE	REVISION
1	11/13/06	UPDATE TO 2004 BUILDING CODE

DATE: 08/02/04
SCALE: N.T.S.
DWG. BY: JCALAFAT
CHK. BY:
DWG NO.:
SHEET 3 OF 4

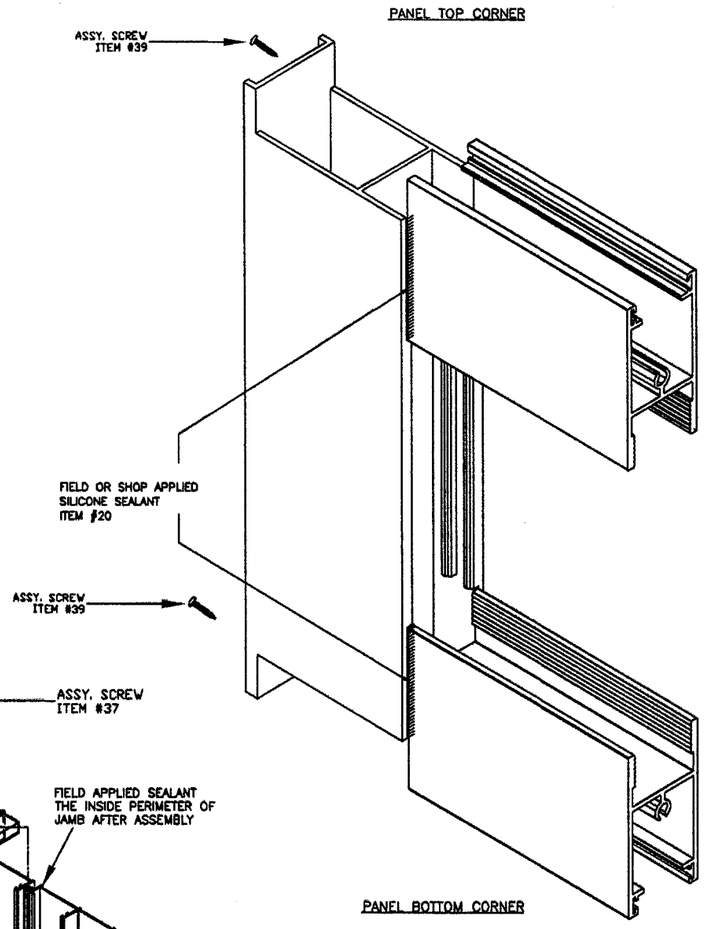

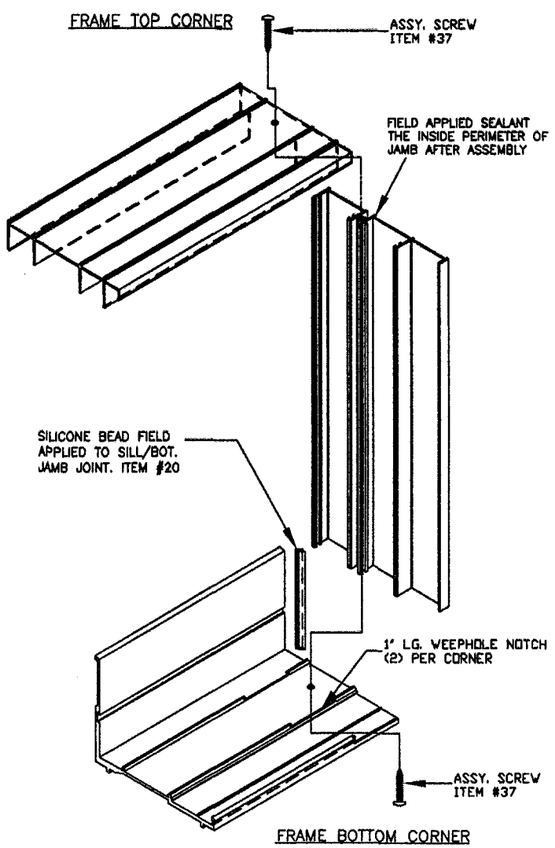

ITEM NO.	PART NO.	REQ'D	PART NAME	REMARKS
1	100-018	1	FRAME HEAD	FRAME
2	100-016	1	FRAME SILL	FRAME
2A	100-045	1	FRAME SILL	FRAME
3	100-019	2	FRAME JAMB	FRAME
4	100-033	4	TOP RAIL	PANEL
5	100-032	2	BOTTOM RAIL, MOVING	PANEL
6	100-033	2	BOTTOM RAIL, FIXED	PANEL
7	100-029	4	INTERLOCK STILE	PANEL
8	100-031	1	FEMALE ASTRAGAL	PANEL
9	100-034	2	FIXED JAMB STILE	FIXED PANEL
10	100-020	4	JAMB STILE RETAINER CLIP	FXD. JAMB @3 1/2" FROM ENDS
11	100-028	3	TRACK CLIP	ASTRAGAL & INTRLK'S
12	100-030	1	LOCK STILE	PANEL
13	100-003	2	TRACK ADAPTER	
14	TYPE 1	1	JOHSON BROS., S.S. TRACK CAP	FRAME SILL
15		4	9/16" LAMINATED H.S. GLASS	SEE ELEVATIONS
16	G-131	AS REQ'D	PROTOTYPE, PLS. VINYL FLAP	BOT. RAIL PANELS, SINGLE ROW
17	SILICONE	AS REQ'D	GE-SSG4000 SELALANT	PANELS/GLASS
18	SILICONE	AS REQ'D	TREMCO SPECTREM 2	PANELS & FR. CORNERS
19	G-127	AS REQ'D	DS. BROWN, VINYL FLAP	TOP RAILS, DOUBLE ROW
20	G-115A	AS REQ'D	PROTOTYPE PLS., FLAP VINYL	INTERLOCK STILES, SINGLE ROW
21	G-115A	AS REQ'D	PROTOTYPE PLS., FLAP VINYL	FRAME JAMB, DOUBLE ROW
22		4	#10X3/4"P.H.S.M.S.,S/S	BOTT. MVG. RAIL (2)EACH
23	683-537	1	S/S LOCK\WOOD HANDEL ASS'Y.	SASH CONTROL LOCKSTILE
24	2536-10S/S	1	STAINLESS STEEL KEEPER	TRUTH FEMALE ASTG. STILE
25	3793	4	DELMAR TANDEM WHEELS	MOV. BOT. RAILS
26		2	STL BAR, 3/4'X1"	MOV. BOTOM RAILS (REINF'T)
27	100-040	4	AL. CH'L, 3/4"X1"X3/4"X1/8"x47"	TOP RAIL, PANELS (REINF'T)
28	100-040	2	AL. CH'L, 3/4"X1"X3/4"X1/8"x47"	FXD BOTT. RAIL PNLS. (REINF'T)
29		8	AL. PLATE, 15/16x.108x2 1/8"	SHIMMING PLT'S @ WHEEL ASS'Y***
30		4	AL. BAR, 1.844x1/4"x4"	ENDS INTRLK'S, PANELS.**
31		8	#10x3/8"P.H.S.M., S/S	TOP RAIL ALL PANELS(4)EACH
32		3	AL. PLATE 1/4"x4"x6"LG.	FR. SILL AT INTRLK/ASTRGL
33		1	AL ANGLE @ BOT OF FEM ASTRAGAL	2 5/16x2 1/8x4x1/4 THK.
34		4	#10X1" PH SMS SS	FRAME CORNERS (ASSY SCRW)
35		4	#10X1" PH SMS	FX'D JAMB, W/ITEM#10
36		16	#10X1" PH SMS SS	PANEL CORNERS (ASSY SCRW)
37		4	#10-32X1/2" PH SMS SS	BOT. LCKST'L W/ITEM#32(H REINF'T)
38		1	1/4"-20X3/4" FH SMS SS	BOT END ASTRAGAL (INTERIOR)
39		9	1/4"-20X1/2" PH SMS SS	FR SILL W/ITEM#11
40	#100-5	8	PLASTIC GUIDE	M+M PLASTICS, TOP RAIL
41		8	PAD PILE, 1/2X1 3/4X2 1/2"	ULTRA-PLUG,FR. SILL LOCK STILE
42		3	PILE PAD 1 13/16X2 1/2X3/8	FR. SILL ULTRAFAB
43		3	PILE PAD 1 13/16X2 1/2X5/8	FR. HEAD ULTRAFAB.
44		4	STL BAR 1/4"x 1" 3/4"x 95" LG	AT INTERLOCK STILE *
45		4	STL BAR 3/8"X 1" 3/4"x 95" LG	AT INTERLOCK STILE *
46		1	STL TUBE 1X 3X 1/8 THKx 95" LG	AT ASTRAGAL STILE
47		1	STL BAR 1/2"x 1"x 95" LG	AT LOCK STILE
48		AS REQ'D	EXP. FOAM, GREAT-STUFF	AT TOP & BOT. OF ASTRAGALS

NOTES:
1. * AT EACH SET OF INTERLOCKS.
2. ** AT TOP OF EACH INTERLOCK
3. *** AT MOVING BOTTOM RAIL(2) EACH WHEEL ASS'Y

PRODUCT RENEWED
as complying with the Florida
Buiding Code
Acceptance No 02-1105.09
Expiration Date DEC 20, 2008
By Ishaq I. Llanda
Miami-Dade Product Control
Division

XCEL ENGINEERING CORP.
7785 NW 56 Street.
Miami, Fl 33166
(305) 772 5023
CAN (EB) 9324

DEC 06 2006

Sifang Zhao Fla PE# 50685

PRODUCT RENEWED
as complying with the Florida
Buiding Code
Acceptance No 06-1121.18
Expiration Date DEC 20, 2007
By Ishaq I. Llanda
Miami-Dade Product Control
Division

Miami Wall Systems, Inc.
701 West 25th street
Hialeah, Florida. 33010
Phone:(305) 888-2300 Fax:(305) 888-3058

SGD SERIES 100

BILL OF MATERIAL
EXTRUSION SUMMARY

NO.	DATE	REVISION
1	11/13/06	UPDATE TO 2004 BUILDING CODE

DATE: 08/02/04
SCALE: N.T.S.
DWG. BY: JCALAFAT
CHK. BY:
DWG NO.:
SHEET 4 OF 4