MIAMI-DADE

BUILDING CODE COMPLIANCE OFFICE (BCCO)
PRODUCT CONTROL DIVISION

MIAMI-DADE COUNTY, FLORIDA
METRO-DADE FLAGLER BUILDING
140 WEST FLAGLER STREET, SUITE 1603
MIAMI, FLORIDA 33130-1563
(305) 375-2901 FAX (305) 375-2908

NOTICE OF ACCEPTANCE (NOA)

Decra Roofing Systems Inc.
1230 Railroad St.
Corona, CA 92882

SCOPE:

This NOA is being issued under the applicable rules and regulations governing the use of construction materials. The documentation submitted has been reviewed by Miami-Dade County Product Control Division and accepted by the Board of Rules and Appeals (BORA) to be used in Miami Dade County and other areas where allowed by the Authority Having Jurisdiction (AHJ).

This NOA shall not be valid after the expiration date stated below. The Miami-Dade County Product Control Division (In Miami Dade County) and/or the AHJ (in areas other than Miami Dade County) reserve the right to have this product or material tested for quality assurance purposes. If this product or material fails to perform in the accepted manner, the manufacturer will incur the expense of such testing and the AHJ may immediately revoke, modify, or suspend the use of such product or material within their jurisdiction. BORA reserves the right to revoke this acceptance, if it is determined by Miami-Dade County Product Control Division that this product or material fails to meet the requirements of the applicable building code.

This product is approved as described herein, and has been designed to comply with the Florida Building Code, and the High Velocity Hurricane Zone of the Florida Building Code.

DESCRIPTION: Decra Roof Systems: Decra Tile, Decra Shake, Decra Shake Plus, Decra Shingle Plus & Decra Villa Tile

LABELING: Each unit shall bear a permanent label with the manufacturer's name or logo, city, state and following statement: "Miami-Dade County Product Control Approved", unless otherwise noted herein.

RENEWAL of this NOA shall be considered after a renewal application has been filed and there has been no change in the applicable building code negatively affecting the performance of this product.

TERMINATION of this NOA will occur after the expiration date or if there has been a revision or change in the materials, use, and/or manufacture of the product or process. Misuse of this NOA as an endorsement of any product, for sales, advertising or any other purposes shall automatically terminate this NOA. Failure to comply with any section of this NOA shall be cause for termination and removal of NOA.

ADVERTISEMENT: The NOA number preceded by the words Miami-Dade County, Florida, and followed by the expiration date may be displayed in advertising literature. If any portion of the NOA is displayed, then it shall be done in its entirety.

INSPECTION: A copy of this entire NOA shall be provided to the user by the manufacturer or its distributors and shall be available for inspection at the job site at the request of the Building Official.

This NOA revises NOA # 07-0604.04 and consists of pages 1 through 21.
The submitted documentation was reviewed by Alex Tigera.

MIAMI-DADE COUNTY APPROVED

ROOFING SYSTEM APPROVAL:

Category:	Roofing
Sub-Category:	Metal, Panels (Non-Structural)
Material:	Steel
Deck Type:	Wood
Maximum Design Pressure	**-153.5 psf (See General Limitations #1)**

TRADE NAMES OF PRODUCTS MANUFACTURED OR LABELED BY APPLICANT

Product	Dimensions	Test Specifications	Product Description
Decra Tile	Width = 16 1/2" Length = 52 1/4" Thickness = 0.0179	TAS 110	Corrosion resistant, coated, preformed, metal panels in a tile profile.
Decra Shake	Width = 14-½" Length = 53-¼" Thickness = 0.0179	TAS 110	Corrosion resistant, coated, preformed, metal panels simulating a shake profile
Decra Shingle Plus	Width = 15-$^{7}/_{8}$" Length = 51-¾ " Thickness = 0.0179	TAS 110	Corrosion resistant, coated, preformed, metal panels simulating a shingle profile
Decra Shake Plus	Width = 15- ½" Length = 53- ½" Thickness = 0.0179	TAS 110	Corrosion resistant, coated, preformed, metal panels simulating a shake profile
Decra Villa Tile	Width = 17" Length = 44-$^{3}/_{4}$" Thickness = 0.0179	TAS 110	Corrosion resistant, coated, preformed, metal panels simulating a spanish clay tile profile
Trim Pieces	l = varies w = varies Thickness = 0.0179	TAS 110	Standard flashing and trim pieces

TRADE NAMES OF PRODUCTS MANUFACTURED OTHERS

Product	Dimensions	Test Specifications	Product Description	Manufacturer
Fasteners (Screws) (Plywood Deck Into Wood Truss and Wood Battens into Plywood Deck or batten)	Min. #8 x 2-1/2" long	TAS-114 Appendix E	Coated all purpose steel exterior wood screw	Generic
Fasteners (Plywood Deck into Wood Truss)	min. #8 x 2-3/8 or min. 12 ga.	TAS 114 Appendix E	Pan head wood screws or annular ring shank hot dipped electro or mechanically galv. roofing nails for attachment of plywood deck to wood trusses	Generic
Wood Battens	2" x 2"	N/A	N/A	Generic
Counter Battens (or battens for system A-5)	1" x 4"	N/A	N/A	Generic
Steel Battens	2-½" wide by 7/8" high x 0.188"min.	N/A	Galvanized steel drywall furring channel (hat section)	Generic
Nails (Counter Batten into Wood Truss)	No. 16d x 3-¼" long x 0.131" diameter	TAS 114 Appendix E	Corrosion resistant, coated smooth shank steel nails.	Generic
Fasteners (Screws) (Wood Battens into Plywood and Wood Truss)	Min. No. 9 x 3-1/2" long	TAS 114 Appendix E	Coated all purpose steel exterior wood screw.	Generic
Screws (Panel Attachment A-1, A-2, A-4 systems, and steel batten to plywood)	Min. #8 x 1-½"	TAS 114 Appendix E	Corrosion resistant or zinc plated hex head sheet metal screw	Generic
Screws (Panel Attachment A-3 systems)	Min. #10 x 1-½"	TAS 114 Appendix E	Corrosion resistant or zinc plated hex head sheet metal screw	Generic

Screws (Steel Battens into Plywood and Wood Truss)	Min. #8 x 2-½"	TAS 114 Appendix E	Corrosion resistant or zinc plated hex head sheet metal screw	Generic
Screws (Panel Attachment to Deck or Battens)	Min. #12 x 1-1/2"	TAS 114 Appendix E	Corrosion resistant or zinc plated hex head sheet metal screw	Generic
Screws (Panel to Panel Attachment for System A-5)	Min. #8 x 3/4"	TAS 114 Appendix E	Corrosion resistant or zinc plated hex head sheet metal screw	Generic
Screws (Panel to Deck Front Nose First Course Only)	Min. #8 x 1-1/2"	TAS 114 Appendix E	Corrosion resistant or zinc plated hex head sheet metal screw	Generic
Valley Flashing	min. 26 ga. min. 16" width	ASTM A 525	Galvanized steel valley flashing	generic

EVIDENCE SUBMITTED:

Test Agency	Test Identifier	Test Name /Report	Date
Underwriters Laboratories Inc.	07NK22905	TAS 125	11/12/07
Underwriters Laboratories Inc.	07NK09386	TAS 125	05/21/07
Underwriters Laboratories Inc.	06NK07480	TAS 125	05/02/06
Underwriters Laboratories Inc.	06NK07480	TAS 125	04/13/06
Underwriters Laboratories Inc.	06NK07480	TAS 125	04/12/06
Underwriters Laboratories Inc.	03CA11899	UL 580	10/01/03
PRI Asphalt Technologies	DECR-001-02-01	TAS 100	05/20/07
PRI Asphalt Technologies	TARI-004-02-01	TAS 100	03/01/03
PRI Asphalt Technologies	TARI-005-02-01	TAS 100	03/01/03
PRI Asphalt Technologies	TARI-006-02-01	TAS 100	03/01/03
ETC Laboratories	ETC-02-840-12044.0	ASTM G 26	12/21/02
The Center for Applied Engineering,	No. 307064MDC	PA 100	April, 1995
ETC Laboratories	ETC-02-840-12044.0	ASTM B 117	12/21/02
Western Fire Center, Inc.	Project No. 95022	Fire Resistance ASTM E 108	June, 1995
The Center for Applied Engineering,	MTS 25-7248A	ASTM B 117	Aug., 1995
The Center for Applied Engineering,	MTS 25-7248B	ASTM G 26	Aug., 1990
The Center for Applied Engineering,	MDC-124 & 127		April, 1995
United States Testing Co., Inc.	187260-1 & 2	ASTM E 108	April, 1992
United States Testing Co., Inc.	187853-1	ASTM E 108	June, 1993
Western Fire Center, Inc.	Project No. 95022	ASTM E 108	June, 1995

APPROVED SYSTEMS

SYSTEM A-1:	Decra Shake, Tile & Shingle Plus (installed on battens)
Deck Type:	Wood, Non-insulated
Deck Description:	$^{19}/_{32}$" or greater plywood or wood plank. For re-roof applications, refer below.
Slope Range:	2:12 or greater (See underlayment below for additional requirements)
Maximum Uplift Pressure:	**See Fastening Options Below**

Deck Attachment: In accordance with applicable Building Code, but in no case shall it be less than # 8 x 2-3/8" long ring shank nails spaced 6" O.C. In reroofing, where the deck is less than $^{19}/_{32}$" thick (Minimum $^{15}/_{32}$") The above attachment method must be in addition to existing attachment.

Underlayment: Minimum underlayment shall be an ASTM D 226 Type II installed with a minimum 4" side-lap and 6" end-laps. Underlayment shall be fastened with corrosion resistant tin-caps and 12 gauge 1 ¼" annular ring-shank nails, spaced 6" o.c. at all laps and two staggered rows 12" o.c. in the field of the roll. Or, any Miami-Dade County Product Control Approved underlayment having a current NOA.

Slopes between 2:12 and 3:12 require additional moisture barrier consisting of two layers of underlayment cemented together or a self-adhering polymer modified bitumen sheet with current NOA such as Grace Ice & Water Shield or Polyglass TU Plus

Fire Barrier Board: Any approved fire barrier having a current NOA. Or for class A or B fire rating, install minimum ¼" thick Georgia Pacific "Dens Deck" (with current NOA) or minimum 4mm thick of Tritex, RockRoof (with current NOA) or $^{5}/_{8}$" water resistant type X gypsum sheathing with treated core and facer or 1 layer of Elk Versashield (with current NOA).

Eave Termination Eave metal drip edge shall be installed in a $^{1}/_{8}$" continuous bed of approved ASTM 4586 flashing cement with sealed laps. Eave metal drip edge shall be fastened to deck at 4" o.c. in accordance with RAS 111.

Valleys: Valley construction shall be as detailed in Decra Roofing Systems Inc. current published specifications, and in compliance with the minimum requirements provided in RAS 133.

Metal Panels and Accessories: Install the "Decra Shake, Tile or Shingle Plus" and accessories in compliance with Decra Roofing Systems Inc current, published installation instructions and details. Flashing, penetrations, valley construction and other details shall be constructed in compliance with the minimum requirements provided in RAS 133.

Field Condition:

Install minimum 2" x 2" wood battens over underlayment, running perpendicular to the roof slope, at a maximum spacing of 12-$^{5}/_{8}$" for the Decra Shake, or 14-½ "o.c. for the Decra Tile and Decra Shingle Plus. Attach wood battens through deck to wood trusses spaced 24" o.c. with one #9 x 3-1/2" coated all purpose steel exterior wood screw.

Panels fastened to battens with approved No. 8 x 1 ½" long screws driven into the (lower) butt edges course and upper edge of adjacent lower course spaced 12 inches o.c. ***Four*** approved screws for each full panel.

Maximum Design Pressure for Field Condition:

-86 psf. (See General Limitation #1)

Perimeter and Corner Condition:

Install minimum 2" x 2" wood battens over underlayment, running perpendicular to the roof slope, at a maximum spacing of 12-$^{5}/_{8}$" for the Decra Shake, or 14-½ "o.c. for the Decra Tile and Decra Shingle Plus. Attach wood battens through deck to wood trusses spaced 24" o.c. with two #9 x 3-1/2" coated all purpose steel exterior wood screws. ***Also attach wood battens to the deck with #8 x 2-1/2" long coated all purpose exterior wood screws, one screw in the middle of each space between the wood trusses.***

Panels fastened to battens with approved No. 8 x 1 ½" long hex head screws driven into the (lower) butt edges course and upper edge of adjacent lower course spaced 7 inches o.c. ***Seven*** approved screws for each full panel.

Maximum Design Pressure for Perimeter And Corner Condition:

-153.5 psf. (See General Limitation #1)

System A-2:	Decra Shake, Tile and Shingle Plus (installed on counter battens and battens)
Deck Type:	Wood, Non-insulated
Deck Description:	$^{19}/_{32}$" or greater plywood or wood plank. For re-roof applications, refer below.
Slope Range:	2:12 or greater (See underlayment below for additional requirements)
Maximum Uplift Pressure:	**See Fastening Options Below**

Deck Attachment: In accordance with applicable Building Code, but in no case shall it be less than # 8 x 2-3/8" long ring shank nails spaced 6" O.C. In reroofing, where the deck is less than $^{19}/_{32}$" thick (Minimum $^{15}/_{32}$") The above attachment method must be in addition to existing attachment.

Underlayment: Minimum underlayment shall be an ASTM D 226 Type II installed with a minimum 4" side-lap and 6" end-laps. Underlayment shall be fastened with corrosion resistant tin-caps and 12 gauge 1 ¼" annular ring-shank nails, spaced 6" o.c. at all laps and two staggered rows 12" o.c. in the field of the roll. Or, any Miami-Dade County Product Control Approved underlayment having a current NOA.

Slopes between 2:12 and 3:12 require additional moisture barrier consisting of two layers of underlayment cemented together or a self-adhering polymer modified bitumen sheet with current NOA such as Grace Ice & Water Shield or Polyglass TU Plus

Fire Barrier Board: Any approved fire barrier having a current NOA. Or for class A or B fire rating, install minimum ¼" thick Georgia Pacific "Dens Deck" (with current NOA) or minimum 4mm thick of Tritex, RockRoof (with current NOA) or $^{5}/_{8}$" water resistant type X gypsum sheathing with treated core and facer or 1 layer of Elk Versashield (with current NOA).

Eave Termination Eave metal drip edge shall be installed in a $^{1}/_{8}$" continuous bed of approved ASTM 4586 flashing cement with sealed laps. Eave metal drip edge shall be fastened to deck at 4" o.c. in accordance with RAS 111.

Valleys: Valley construction shall be as detailed in Decra Roofing Systems Inc current published specifications, and in compliance with the minimum requirements provided in RAS 133.

Metal Panels and Accessories: Install the Decra Shake, Tile or Shingle Plus and accessories in compliance with Decra Roofing Systems Inc current, published installation instructions and details. Flashings, penetrations, valley construction and other details shall be constructed in compliance with the minimum requirements provided in RAS 133.

Field Condition:

Install minimum 1" x 4" wood counter battens over underlayment parallel to and centered over wood trusses spaced maximum 24" o.c. Fasten the counter battens with #16d x 3-1/4" long smooth shank box nails (0.131 diameter shank) spaced ***12" o.c.***

Install minimum 2" x 2" wood battens over counter battens running perpendicular to the roof slope, at a maximum spacing of 12-$^{5}/_{8}$" for the Decra Shake, or 14-½ "o.c. for the Decra Tile and Decra Shingle Plus. Attach wood battens to the counter battens with one #9 x 3-1/2" coated all purpose steel exterior wood screw per intersection with counter batten.

Panels fastened to battens with approved No. 8 x 1 ½" long screws driven into the (lower) butt edges course and upper edge of adjacent lower course spaced 12 inches o.c. Four approved screws for each full panel.

Maximum Design Pressure for Field Condition:

-78.5 psf. (See General Limitation #1)

Perimeter and Corner Condition:

Install minimum 1" x 4" wood counter battens over underlayment parallel to and centered over wood trusses spaced maximum 24" o.c. Fasten the counter battens with #16d x 3-1/4" long smooth shank box nails (0.131 diameter shank) spaced ***7" o.c.***

Install minimum 2" x 2" wood battens over counter battens running perpendicular to the roof slope, at a maximum spacing of 12-$^{5}/_{8}$" for the Decra Shake, or 14-½ "o.c. for the Decra Tile and Decra Shingle Plus. Attach wood battens to the counter battens with two #9 x 3-1/2" coated all purpose steel exterior wood screw per intersection with counter batten.

Panels fastened to battens with approved No. 8 x 1 ½" long screws driven into the (lower) butt edges course and upper edge of adjacent lower course spaced 7 inches o.c. Seven approved screws for each full panel.

Maximum Design Pressure for Perimeter And Corner Condition:

-146 psf. (See General Limitation #1)

SYSTEM A-3:	Decra Shake Plus & Decra Shingle Plus (direct to deck)
Deck Type:	Wood, Non-insulated
Deck Description:	$^{19}/_{32}$" or greater plywood or wood plank. For re-roof applications, refer below.
Slope Range:	2:12 or greater (See underlayment below for additional requirements)
Maximum Uplift Pressure:	**The maximum allowable uplift pressure for System A-3 shall be -102 psf (See General Limitations #1).**
Deck Attachment:	In accordance with applicable Building Code, but in no case shall it be less than # 8 x 2 ½" long screws spaced 4" O.C. In reroofing, where the deck is less than $^{19}/_{32}$" thick (Minimum $^{15}/_{32}$") The above attachment method must be in addition to existing attachment.
Underlayment:	Minimum underlayment shall be an ASTM D 226 Type II installed with a minimum 4" side-lap and 6" end-laps. Underlayment shall be fastened with corrosion resistant tin-caps and 12 gauge 1 ¼" annular ring-shank nails, spaced 6" o.c. at all laps and two staggered rows 12" o.c. in the field of the roll. Or, any Miami-Dade County Product Control Approved underlayment having a current NOA. Slopes between 2:12 and 3:12 require additional moisture barrier consisting of two layers of underlayment cemented together or a self-adhering polymer modified bitumen sheet with current NOA such as Grace Ice & Water Shield or Polyglass TU Plus
Fire Barrier Board:	Any approved fire barrier having a current NOA. Or for class A or B fire rating, install minimum ¼" thick Georgia Pacific "Dens Deck" (with current NOA) or minimum 4mm thick of Tritex, RockRoof (with current NOA) or $^{5}/_{8}$" water resistant type X gypsum sheathing with treated core and facer or 1 layer of Elk Versashield (with current NOA).
Eave Termination	Eave metal drip edge shall be installed in a $^{1}/_{8}$" continuous bed of approved ASTM 4586 flashing cement with sealed laps. Eave metal drip edge shall be fastened to deck at 4" o.c. in accordance with RAS 111.
Valleys:	Valley construction shall be as detailed in Decra Roofing Systems Inc current published specifications, and in compliance with the minimum requirements provided in RAS 133.
Metal Panels and Accessories:	Install the Decra Shake Plus or Decra Shingle Plus and accessories in compliance with Decra Roofing Systems Inc current, published installation instructions and details. Flashings, penetrations, valley construction and other details shall be constructed in compliance with the minimum requirements provided in RAS 133.

Install a 1 x 4 inch wood starter batten at the eave fastened to wood deck with #10 x 1-½ inch long corrosion resistant wood screws spaced six inches o.c. Panels fastened to starter strip and wood deck with No. 10 x 1 ½" long corrosion resistant screws driven into the (lower) butt edge course spaced 6 inches o.c for a total of seven screws. And eight additional screws in the back end of each panel fastened to the deck for a total of fifteen screws per each full panel. (See detail drawing herein). On subsequent rows after the first row panels are fastened to each other with #10 x 1-½" long corrosion resistant screws driven into the (lower) butt edge course spaced 6 inches o.c for a total of seven screws. And eight additional screws in the back end of each panel fastened to the deck for a total of fifteen screws per each full panel.

SYSTEM A-4:	Decra Shake, Tile & Shingle Plus (installed on steel battens)
Deck Type:	Wood, Non-insulated
Deck Description:	$^{19}/_{32}$" or greater plywood or wood plank. For re-roof applications, refer below.
Slope Range:	2:12 or greater (See underlayment below for additional requirements)
Maximum Uplift Pressure:	**See Fastening Options Below**

Deck Attachment: In accordance with applicable Building Code, but in no case shall it be less than # 8 x 2-3/8" long ring shank nails spaced 6" O.C. In reroofing, where the deck is less than $^{19}/_{32}$" thick (Minimum $^{15}/_{32}$") The above attachment method must be in addition to existing attachment.

Underlayment: Minimum underlayment shall be an ASTM D 226 Type II installed with a minimum 4" side-lap and 6" end-laps. Underlayment shall be fastened with corrosion resistant tin-caps and 12 gauge 1 ¼" annular ring-shank nails, spaced 6" o.c. at all laps and two staggered rows 12" o.c. in the field of the roll. Or, any Miami-Dade County Product Control Approved underlayment having a current NOA.

Slopes between 2:12 and 3:12 require additional moisture barrier consisting of two layers of underlayment cemented together or a self-adhering polymer modified bitumen sheet with current NOA such as Grace Ice & Water Shield or Polyglass TU Plus

Fire Barrier Board: Any approved fire barrier having a current NOA. Or for class A or B fire rating, install minimum ¼" thick Georgia Pacific "Dens Deck" (with current NOA) or minimum 4mm thick of Tritex, RockRoof (with current NOA) or $^{5}/_{8}$" water resistant type X gypsum sheathing with treated core and facer or 1 layer of Elk Versashield (with current NOA).

Eave Termination Eave metal drip edge shall be installed in a $^{1}/_{8}$" continuous bed of approved ASTM 4586 flashing cement with sealed laps. Eave metal drip edge shall be fastened to deck at 4" o.c. in accordance with RAS 111.

Valleys: Valley construction shall be as detailed in Decra Roofing Systems Inc. current published specifications, and in compliance with the minimum requirements provided in RAS 133.

Metal Panels and Accessories: Install the "Decra Shake, Tile or Shingle Plus" and accessories in compliance with Decra Roofing Systems Inc current, published installation instructions and details. Flashing, penetrations, valley construction and other details shall be constructed in compliance with the minimum requirements provided in RAS 133.

Field Condition:

Install minimum 2-½" x 7/8" steel battens over underlayment, running perpendicular to the roof slope, at a maximum spacing of 12-$^{5}/_{8}$" for the Decra Shake, or 14-½ "o.c. for the Decra Tile and Decra Shingle Plus. Attach steel battens through deck to wood trusses spaced 24" o.c. with two #8 x 2-1/2" hex head steel screws per intersection with wood truss across from each other on the flanges of the steel battens. Also attach the steel battens to the deck with two #8 x 2-1/2" hex head steel screws spaced equally between the wood trusses across from each other on the flanges of the steel battens.

Panels fastened to battens with approved No. 8 x 1 ½" long screws driven into the (lower) butt edges course and upper edge of adjacent lower course spaced 12 inches o.c. ***Four*** approved screws for each full panel.

Maximum Design Pressure for Field Condition:

-59.75 psf. (See General Limitation #1)

Perimeter and Corner Condition:

Install minimum 2-½" x 7/8" steel battens over underlayment, running perpendicular to the roof slope, at a maximum spacing of 12-$^{5}/_{8}$" for the Decra Shake, or 14-½ "o.c. for the Decra Tile and Decra Shingle Plus. Attach steel battens through deck to wood trusses spaced 24" o.c. with two #8 x 2-1/2" hex head steel screws per intersection with wood truss across from each other on the flanges of the steel battens. ***Also attach the steel battens to the deck with three sets of two #8 x 1-1/2" hex head steel screws spaced 6"o.c. between the wood trusses across from each other on the flanges of the steel battens.***

Panels fastened to battens with approved No. 8 x 1 ½" long hex head screws driven into the (lower) butt edges course and upper edge of adjacent lower course spaced 7 inches o.c. ***Seven*** approved screws for each full panel.

Maximum Design Pressure for Perimeter And Corner Condition:

-116.5 psf. (See General Limitation #1)

SYSTEM A-5:	Decra Villa Tile
Deck Type:	Wood, Non-insulated
Deck Description:	$^{19}/_{32}$" or greater plywood or wood plank. For re-roof applications, refer below.
Slope Range:	2:12 or greater (See underlayment below for additional requirements)
Maximum Uplift Pressure:	**See Fastening Options Below**

Deck Attachment: In accordance with applicable Building Code, but in no case shall it be less than # 8 x 2-1/2" ring shank nails spaced 6" o.c.. In reroofing, where the deck is less than $^{19}/_{32}$" thick (Minimum $^{15}/_{32}$") The above attachment method must be in addition to existing attachment.

Underlayment: Minimum underlayment shall be an ASTM D 226 Type II installed with a minimum 4" side-lap and 6" end-laps. Underlayment shall be fastened with corrosion resistant tin-caps and 12 gauge 1 ¼" annular ring-shank nails, spaced 6" o.c. at all laps and two staggered rows 12" o.c. in the field of the roll. Or, any Miami-Dade County Product Control Approved underlayment having a current NOA.

Slopes between 2:12 and 3:12 require additional moisture barrier consisting of two layers of underlayment cemented together or a self-adhering polymer modified bitumen sheet with current NOA such as Grace Ice & Water Shield or Polyglass TU Plus

Fire Barrier Board: Any approved fire barrier having a current NOA. Or for class A or B fire rating, install minimum ¼" thick Georgia Pacific "Dens Deck" (with current NOA) or minimum 4mm thick of Tritex, RockRoof (with current NOA) or $^{5}/_{8}$" water resistant type X gypsum sheathing with treated core and facer or 1 layer of Elk Versashield (with current NOA).

Eave Termination Eave metal drip edge shall be installed in a $^{1}/_{8}$" continuous bed of approved ASTM 4586 flashing cement with sealed laps. Eave metal drip edge shall be fastened to deck at 4" o.c. in accordance with RAS 111.

Valleys: Valley construction shall be as detailed in Decra Roofing Systems Inc. current published specifications, and in compliance with the minimum requirements provided in RAS 133.

Metal Panels and Accessories: Install the "Decra Villa Tile" and accessories in compliance with Decra Roofing Systems Inc current, published installation instructions and details. Flashing, penetrations, valley construction and other details shall be constructed in compliance with the minimum requirements provided in RAS 133.

Field Condition:	Panels fastened to the deck with approved No. 12 x 1 ½" long screws spaced 10 inches o.c. (one screw per shingle fastening tab). ***Four*** approved screws for each full panel. ***Note: Tabs must be put in the down position before installing. (See Detail Drawings for "Villa Tile Installation")***
Maximum Design Pressure for Field Condition:	**-76.5 psf. (See General Limitation #1)**
Perimeter and Corner Condition:	Install minimum 1" x 4" wood battens over underlayment, running perpendicular to the roof slope, at a maximum spacing of 14-$^{1}/_{2}$" o.c. Attach wood battens through deck to wood trusses spaced 24" o.c. with two #8 x 2-1/2" coated all purpose steel exterior wood screw. ***Also attach wood battens to the deck with #8 x 2-1/2" long coated all purpose exterior wood screws, in between the trusses nominally at 10" o.c.*** Panels fastened to battens with approved No. 12 x 1 ½" long hex head screws spaced 10 inches o.c. (one screw per fastening tab) and one screw next to each fastening tab on both sides. ***Twelve*** approved screws for each full panel. Use #8-3/4" long steel pan head zip screws 4" o.c. to fasten shingle courses together.
Maximum Design Pressure for Perimeter And Corner Condition:	**-153 psf. (See General Limitation #1)**

GENERAL LIMITATIONS

1. The maximum designed pressure listed herein shall be applicable to all roof pressure zones (i.e. field, perimeters, and corners). Neither rational analysis, nor extrapolation shall be permitted for enhanced fastening at enhanced pressure zones (i.e. perimeters, extended corners and corners).

2. All panels shall be permanently labeled with the manufacturer's name and/or logo, and the following statement: "Miami-Dade County Product Control Approved."

3. Any modifications to this Notice of Acceptance shall void such approval.

DETAIL DRAWINGS

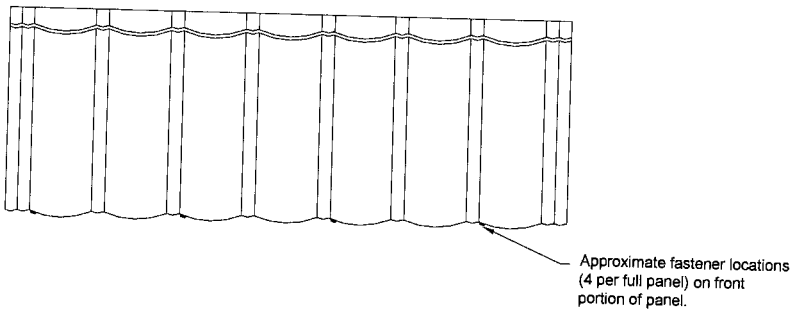

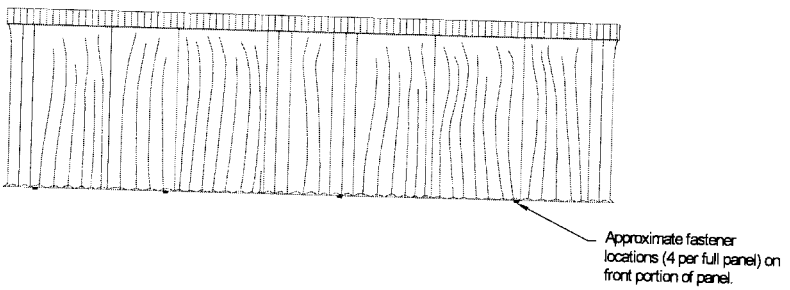

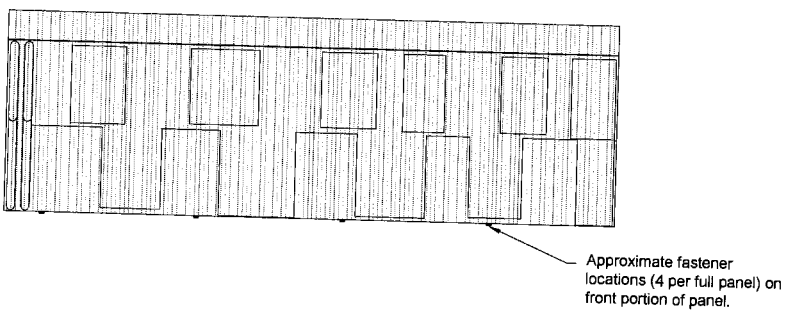

Figure 1.
Fastener Locations
Decra Tile, Shake and Shingle Plus
A-1, A-2 and A-4 Field Conditions

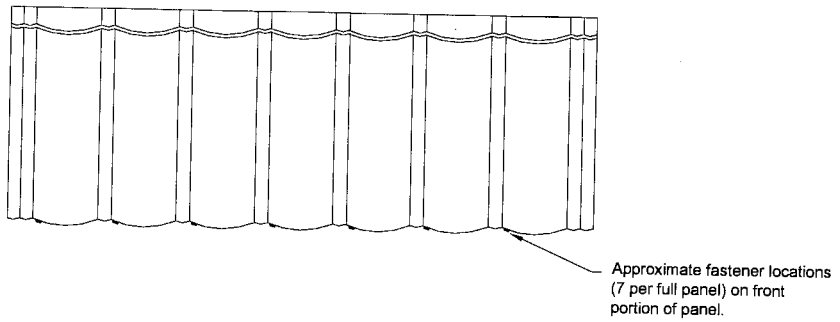

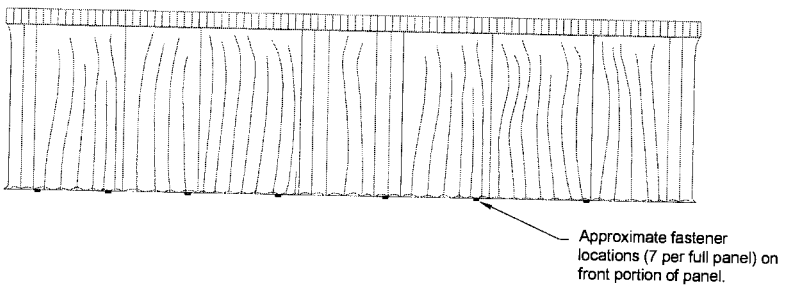

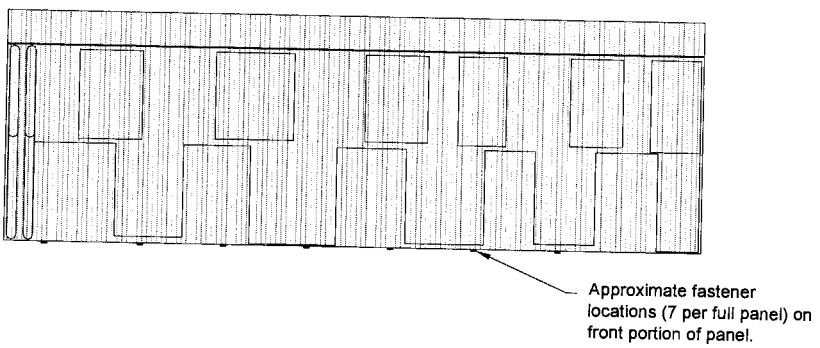

Figure 2.
Fastener Locations
Decra Tile, Shake and Shingle Plus
A-1, A-2 and A-4 Perimeter Conditions

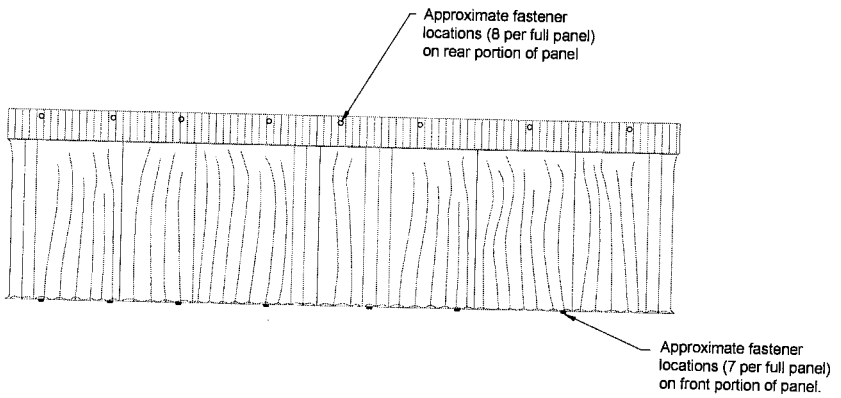

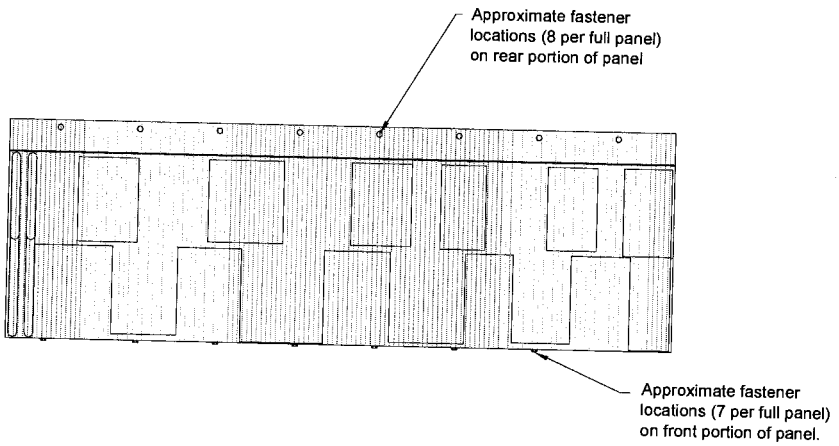

Figure 3.
Fastener Locations
Decra Shake Plus and Shingle Plus
A-3 Deck

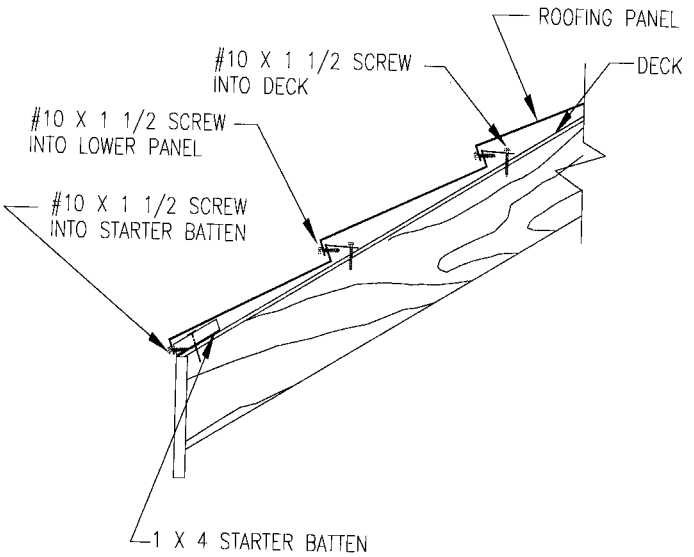

Figure 4.
Fastener Locations
Decra Shake Plus and Shingle Plus
A-3 Deck

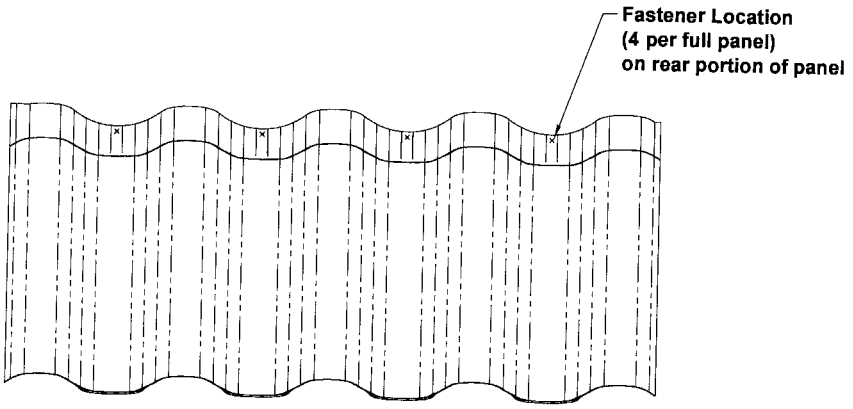

FIELD CONDITION

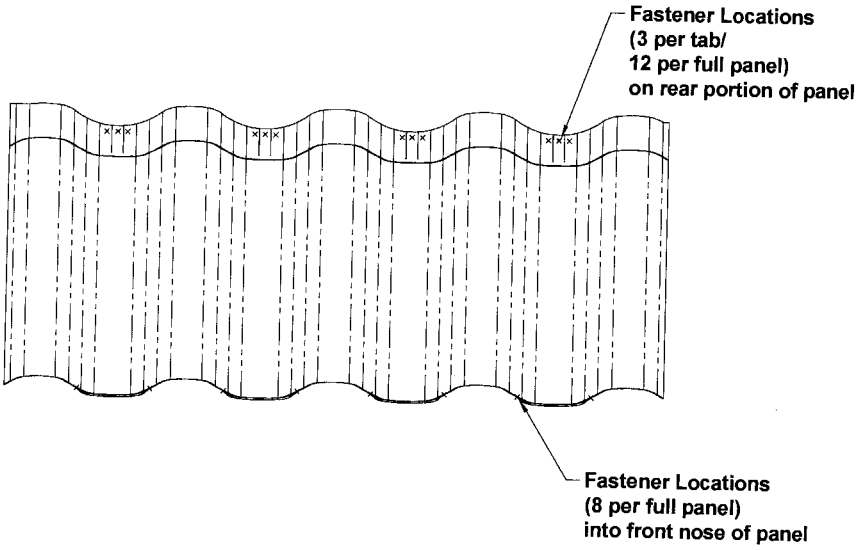

PERIMETER AND CORNER CONDITION

Figure 5.
Fastener Locations
Decra Villa Tile
A-5 Deck

DRAWINGS CONT...
VILLA TILE INSTALLATION DETAIL

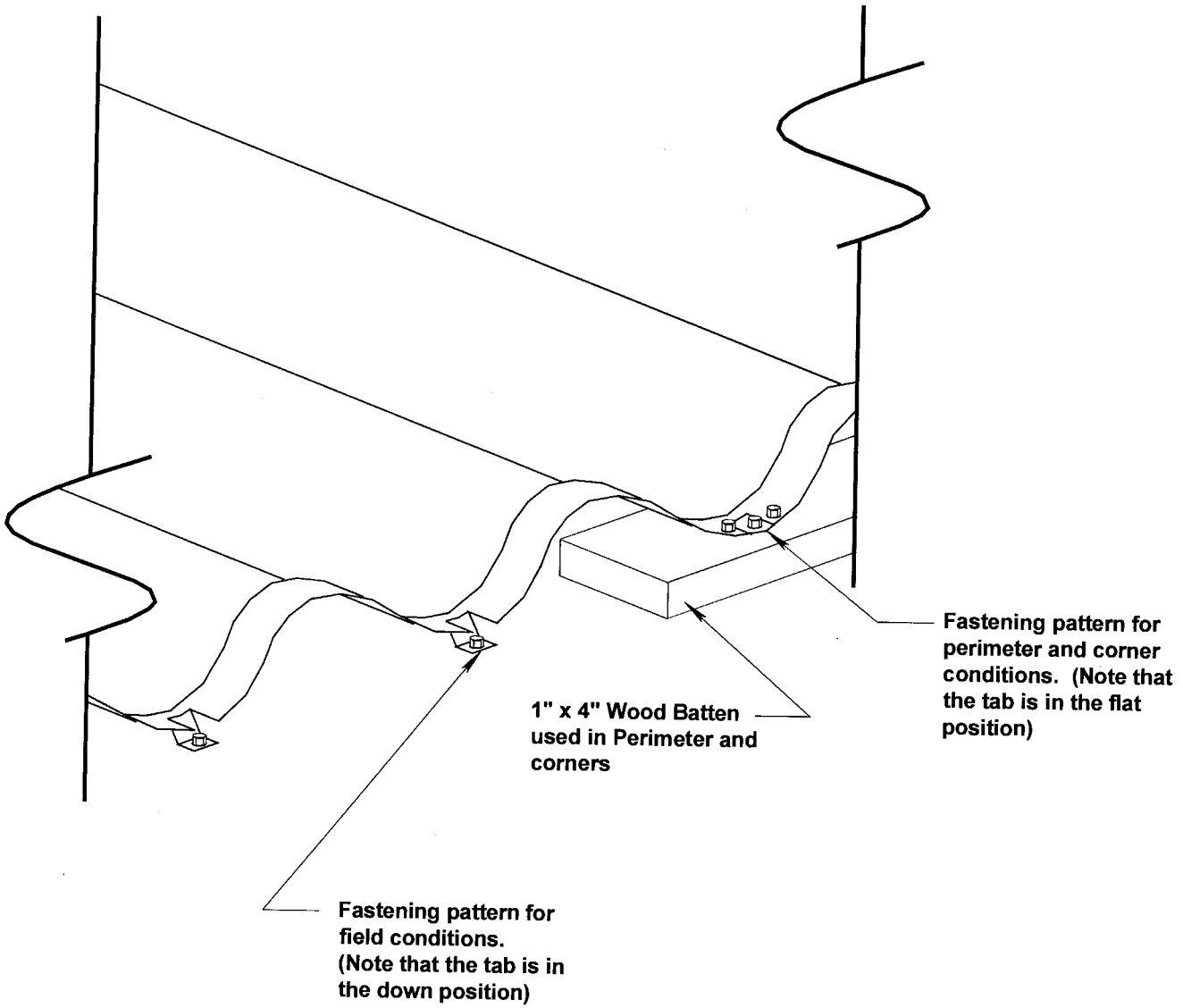

END OF THIS ACCEPTANCE