MIAMI-DADE COUNTY
BUILDING CODE COMPLIANCE OFFICE (BCCO)
PRODUCT CONTROL DIVISION

MIAMI-DADE COUNTY, FLORIDA
METRO-DADE FLAGLER BUILDING
140 WEST FLAGLER STREET, SUITE 1603
MIAMI, FLORIDA 33130-1563
(305) 375-2901 FAX (305) 372-6339
www.maimidade.gov/buildingcode

NOTICE OF ACCEPTANCE (NOA)

Doralum Corporation
7040 N.W. 77 Terrace
Medley, FL 33166

SCOPE:

This NOA is being issued under the applicable rules and regulations governing the use of construction materials. The documentation submitted has been reviewed by Miami-Dade County Product Control Division and accepted by the Board of Rules and Appeals (BORA) to be used in Miami Dade County and other areas where allowed by the Authority Having Jurisdiction (AHJ).

This NOA shall not be valid after the expiration date stated below. The Miami-Dade County Product Control Division (In Miami Dade County) and/or the AHJ (in areas other than Miami Dade County) reserve the right to have this product or material tested for quality assurance purposes. If this product or material fails to perform in the accepted manner, the manufacturer will incur the expense of such testing and the AHJ may immediately revoke, modify, or suspend the use of such product or material within their jurisdiction. BORA reserves the right to revoke this acceptance, if it is determined by Miami-Dade County Product Control Division that this product or material fails to meet the requirements of the applicable building code.

This product is approved as described herein, and has been designed to comply with the Florida Building Code, including the High Velocity Hurricane Zone.

DESCRIPTION: Series 100 Aluminum Storefront System - L.M.I.

APPROVAL DOCUMENT: Drawing No. **W02-92,** titled "Series-100 Aluminum Fixed Lites (L.M.I.)", sheets 1 through 4 of 4, dated 10/09/02, with revision A dated 02/26/08, prepared by Al-Farooq Corporation, signed and sealed by Humayoun Farooq, P.E., bearing the Miami-Dade County Product Control Renewal stamp with the Notice of Acceptance number and expiration date by the Miami-Dade County Product Control Division.

MISSILE IMPACT RATING: Large and Small Missile Impact Resistant

LABELING: Each unit shall bear a permanent label with the manufacturer's name or logo, city, state and following statement: "Miami-Dade County Product Control Approved", unless otherwise noted herein.

RENEWAL of this NOA shall be considered after a renewal application has been filed and there has been no change in the applicable building code negatively affecting the performance of this product.

TERMINATION of this NOA will occur after the expiration date or if there has been a revision or change in the materials, use, and/or manufacture of the product or process. Misuse of this NOA as an endorsement of any product, for sales, advertising or any other purposes shall automatically terminate this NOA. Failure to comply with any section of this NOA shall be cause for termination and removal of NOA.

ADVERTISEMENT: The NOA number preceded by the words Miami-Dade County, Florida, and followed by the expiration date may be displayed in advertising literature. If any portion of the NOA is displayed, then it shall be done in its entirety.

INSPECTION: A copy of this entire NOA shall be provided to the user by the manufacturer or its distributors and shall be available for inspection at the job site at the request of the Building Official.

This NOA **renews NOA # 02-1121.01** and consists of this page 1 and evidence pages E-1 and E-2, as well as approval document mentioned above.

The submitted documentation was reviewed by **Carlos M. Utrera, P.E.**

MIAMI-DADE COUNTY APPROVED

4/15/08

NOTICE OF ACCEPTANCE: EVIDENCE SUBMITTED

A. DRAWINGS

1. Manufacturer's die drawings and sections.
2. Drawing No. **W02-92,** titled "Series-100 Aluminum Fixed Lites (L.M.I.)", sheets 1 through 4 of 4, dated 10/09/02, with revision A dated 02/26/08, prepared by Al-Farooq Corporation, signed and sealed by Humayoun Farooq, P.E.

B. TESTS

1. Test reports on 1) Air Infiltration Test per FBC, TAS 202-94
   2) Uniform Static Air Pressure Test, Loading per FBC, TAS 202-94
   3) Water Resistance Test per FBC, TAS 202-94
   4) Large Missile Impact Test per FBC, TAS 201-94
   5) Cyclic Wind Pressure Loading per FBC, TAS 203-94
   6) Forced Entry Test, per FBC 2411 3.2.1 and TAS 202-94

   along with marked-up drawings and installation diagram of a single hung/fixed vinyl window, prepared by Fenestration Testing Laboratory, Inc., Test Report No. **FTL-2811,** dated 03/21/01, signed and sealed by Antonio Acevedo, P.E.
   "Evidence submitted under NOA # 02-1121.01"

C. CALCULATIONS

1. Anchor verification calculations and structural analysis, complying with FBC-2004, prepared by Al-Farooq Corporation, dated 02/28/08, signed and sealed by Humayoun Farooq, P.E.
   Complies with ASTM E1300-02

D. QUALITY ASSURANCE

1. Miami Dade Building Code Compliance Office (BCCO).

E. MATERIAL CERTIFICATIONS

1. Notice of Acceptance No. **02-1205.03** issued to Security Impact Glass Holding LLC for their "**SAF-GLAS Polycarbonate Laminate**", dated 01/02/03, expiring on 12/16/07.
2. Notice of Acceptance No. **03-0225.10** issued to Glasslam NGI Inc. for their "**Safety-Plus II - Laminated Glass**" dated 08/07/03, expiring on 08/07/08.
3. Notice of Acceptance No. **06-0216.06** issued to Solutia Inc. for their "**Saflex IIIG Clear or colored Interlayer**" dated 05/04/06, expiring on 05/21/11.

4/15/08

Carlos M. Utrera, P.E.
Product Control Examiner
NOA No. 07-1130.04
Expiration Date: April 3, 2013
Approval Date: May 8, 2008

NOTICE OF ACCEPTANCE: EVIDENCE SUBMITTED

F. STATEMENTS

1. Statement letter of conformance issued by Al-Farooq Corporation, dated 01/30/08, signed and sealed by Humayoun Farooq, P.E.
2. Statement letter of no financial interest issued by Al-Farooq Corporation, dated 01/30/08, signed and sealed by Humayoun Farooq, P.E.

G. OTHER

1. Notice of Acceptance No. **02-1121.01**, issued to Doralum Corporation, approved on 04/03/03 and expiring on 04/03/08.

4/15/08

Carlos M. Utrera, P.E.
Product Control Examiner
NOA No. 07-1130.04
Expiration Date: April 3, 2013
Approval Date: May 8, 2008

DESIGN LOAD CAPACITY – PSF									
AVERAGE WIDTH INCHES CL TO CL	FRAME HEIGHT INCHES	GLASS TYPE 'A'				GLASS TYPE 'B' & 'C'			
		ANCHOR TYPE 'A'		ANCHOR TYPE 'B'&'C'		ANCHOR TYPE 'A'		ANCHOR TYPE 'B'&'C'	
		EXT.(+)	INT.(–)	EXT.(+)	INT.(–)	EXT.(+)	INT.(–)	EXT.(+)	INT.(–)
24	72	62.0	81.0	62.0	81.0	62.0	81.0	62.0	81.0
30		62.0	81.0	62.0	81.0	62.0	81.0	62.0	81.0
36		62.0	81.0	62.0	81.0	62.0	81.0	62.0	81.0
42		62.0	77.7	62.0	81.0	62.0	77.7	62.0	81.0
48		62.0	72.3	62.0	78.1	62.0	72.3	62.0	81.0
24	78	62.0	81.0	62.0	81.0	62.0	81.0	62.0	81.0
30		62.0	81.0	62.0	81.0	62.0	81.0	62.0	81.0
36		62.0	77.1	62.0	81.0	62.0	77.1	62.0	81.0
42		62.0	69.5	62.0	80.2	62.0	69.5	62.0	81.0
24	80	62.0	81.0	62.0	81.0	62.0	81.0	62.0	81.0
30		62.0	81.0	62.0	81.0	62.0	81.0	62.0	81.0
36		62.0	74.6	62.0	81.0	62.0	74.6	62.0	81.0
42		62.0	67.2	62.0	73.5	62.0	67.2	62.0	81.0
24	84	62.0	81.0	62.0	81.0	62.0	81.0	62.0	81.0
30		62.0	80.4	62.0	81.0	62.0	80.4	62.0	81.0
36		62.0	70.1	62.0	81.0	62.0	70.1	62.0	81.0
24	90	62.0	81.0	62.0	81.0	62.0	81.0	62.0	81.0
30		62.0	74.0	62.0	81.0	62.0	74.0	62.0	81.0
36		62.0	64.2	62.0	81.0	62.0	64.2	62.0	81.0
24	95–3/4	62.0	81.0	62.0	81.0	62.0	81.0	62.0	81.0
30		62.0	68.7	62.0	81.0	62.0	68.7	62.0	81.0
36		59.5	59.5	62.0	76.5	59.5	59.5	62.0	76.5

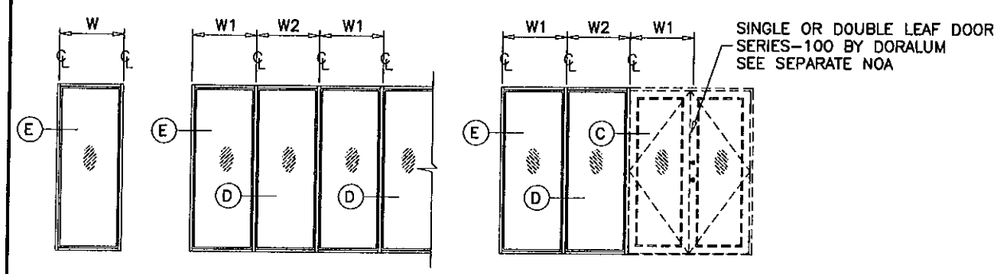

$$\text{AVERAGE WIDTH} = \frac{W1 + W2}{2}$$

APPROVED CONFIGURATIONS

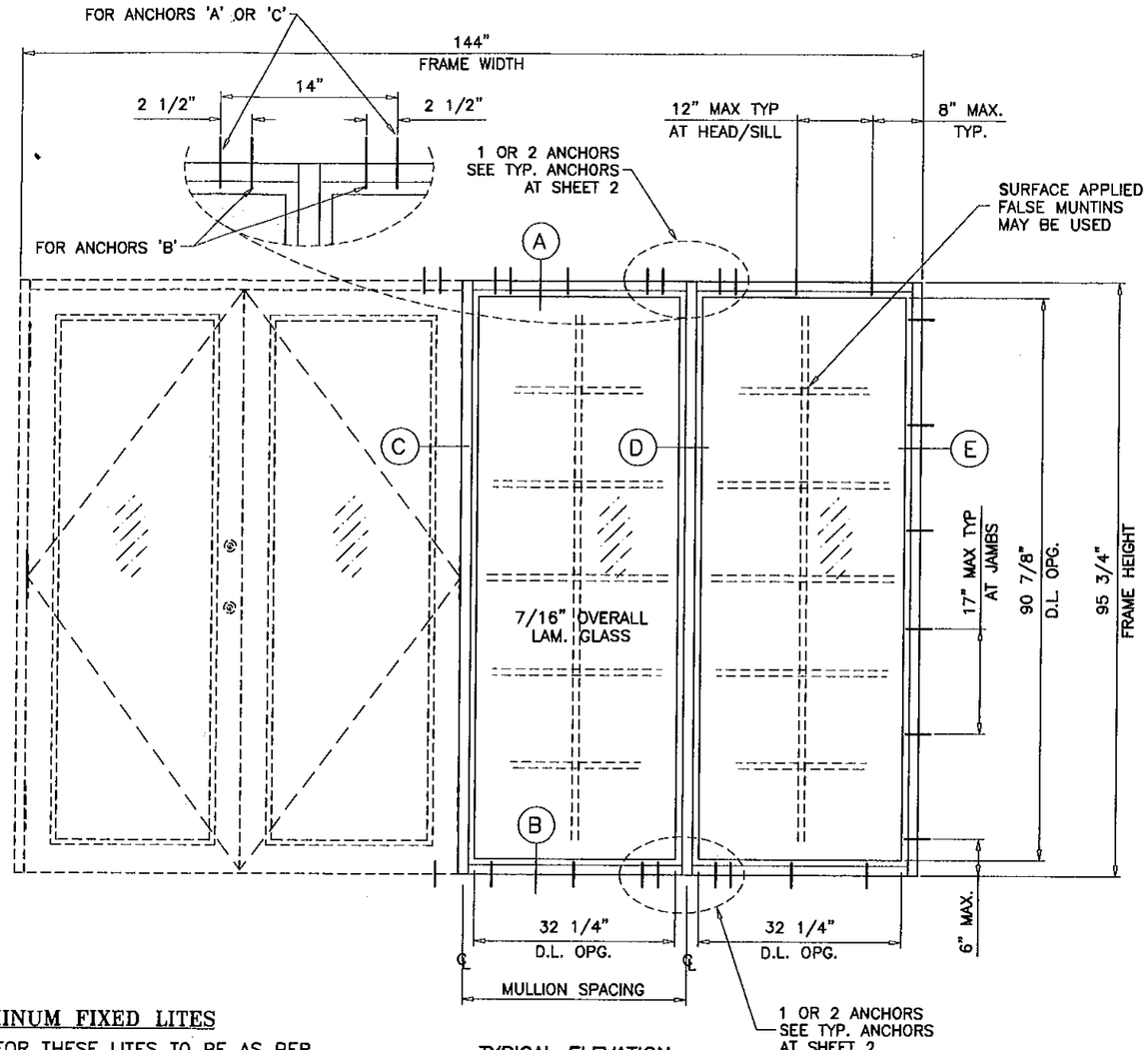

TYPICAL ELEVATION

(XXOO)

TESTED UNIT

SERIES–100 ALUMINUM FIXED LITES

DESIGN LOAD RATING FOR THESE LITES TO BE AS PER CHARTS SHOWN ABOVE.

APPROVAL APPLIES TO SINGLE OR MULTIPLE FIXED LITES. ALSO COMBINATION OF FIXED LITES WITH SERIES–100 ALUMINUM OUT SWING DOORS CARRYING THEIR OWN NOA.

THIS PRODUCT HAS BEEN DESIGNED AND TESTED TO COMPLY WITH THE REQUIREMENTS OF THE FLORIDA BUILDING CODE 2004 EDITION INCLUDING HIGH VELOCITY HURRICANE ZONE (HVHZ).

WOOD BUCKS BY OTHERS, MUST BE ANCHORED PROPERLY TO TRANSFER LOADS TO THE STRUCTURE.

ANCHORS SHALL BE AS LISTED, SPACED AS SHOWN ON DETAILS, ANCHORS EMBEDMENT TO BASE MATERIAL SHALL BE BEYOND WALL DRESSING OR STUCCO.

ANCHORING OR LOADING CONDITIONS NOT SHOWN IN THESE DETAILS ARE NOT PART OF THIS APPROVAL.

A LOAD DURATION INCREASE IN ALLOWABLE STRESS IS USED IN DESIGN OF ANCHORS INTO WOOD ONLY.

MATERIALS INCLUDING BUT NOT LIMITED TO STEEL/METAL SCREWS, THAT COME INTO CONTACT WITH OTHER DISSIMILAR MATERIALS SHALL MEET THE REQUIREMENTS OF 2004 FLORIDA BLDG. CODE SECTION 2003.8.4.

NOTE:
GLASS CAPACITIES ON THIS SHEET ARE BASED ON ASTM E1300–02 (3 SEC. GUSTS) AND FLORIDA BUILDING COMMISSION DECLARATORY STATEMENT DCA05–DEC–219

FIXED LITES ARE RATED FOR LARGE MISSILE IMPACT. SHUTTERS ARE NOT REQUIRED.

Engr: DR. HUMAYOUN FAROOQ
STRUCTURES
FLA. PE # 16557
C.A.N. 3538

FEB 28 2008

PRODUCT RENEWED
as complying with the Florida Building Code
Acceptance No 07-1130.04
Expiration Date 04/03/2013
By
Miami Dade Product Control Division

AL-FAROOQ CORPORATION
ENGINEERS & PRODUCT DEVELOPMENT
1235 S.W. 87 AVE
MIAMI, FLORIDA 33174
TEL. (305) 264-8100 FAX. (305) 262-6978

COMP–ANL\W02–92DAC

SERIES–100 ALUMINUM FIXED LITES (L.M.I.)

DORALUM CORPORATION
7040 N.W. 77 TER.
MEDLEY, FL. 33166
TEL. (305) 884–3922 FAX (305) 884–1464

revisions:

no	date	by	description
A	02.26.08		UPDATED FOR 2004 FBC

date: 10–09–02
scale: 1/2" = 1"
dr. by: HAMID
chk. by:

drawing no.
W02–92

sheet 1 of 4

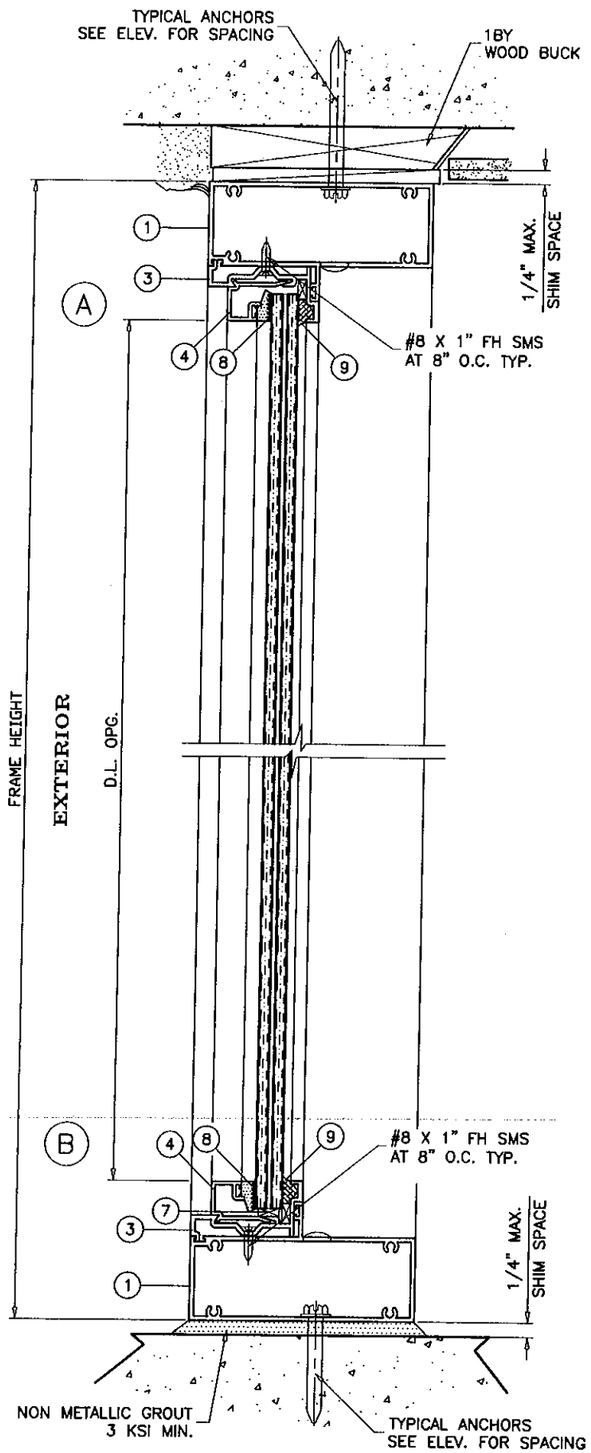

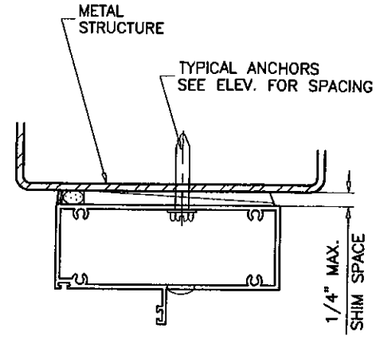

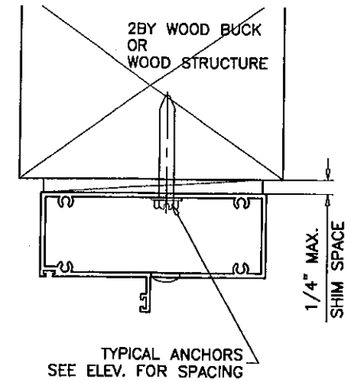

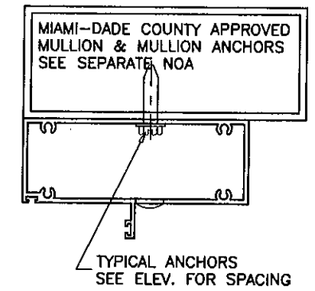

WOOD BUCKS AND METAL STRUCTURE NOT BY DORALUM
MUST SUSTAIN LOADS IMPOSED BY GLAZING SYSTEM
AND TRANSFER THEM TO THE BUILDING STRUCTURE.

TYPICAL ANCHORS: SEE ELEV. FOR SPACING

TYPE 'A'– 1/4" TAPCONS BY 'ELCO' (1) ANCHOR AT EACH SIDE OF MULLION
INTO 2BY WOOD BUCKS OR WOOD STRUCTURES
1–3/8" MIN. PENETRATION INTO WOOD

THRU 1BY BUCKS INTO CONC. OR MASONRY
1–1/4" MIN. EMBED INTO CONC. OR MASONRY

TYPE 'B'– 1/4" TAPCONS BY 'ELCO' (2) ANCHORS AT EACH SIDE OF MULLION
INTO 2BY WOOD BUCKS OR WOOD STRUCTURES
1–3/8" MIN. PENETRATION INTO WOOD

THRU 1BY BUCKS INTO CONC. OR MASONRY
1–1/4" MIN. EMBED INTO CONC. OR MASONRY

TYPE 'C'– 1/4" TAPCONS BY 'ELCO' (1) ANCHOR AT EACH SIDE OF MULLION
DIRECTLY INTO CONC. OR MASONRY
1–1/4" MIN. EMBED INTO CONC. OR MASONRY

TYPE 'C'– #14 SMS OR SELF DRILLING SCREWS (1) ANCHOR AT EACH SIDE OF MULLION
INTO MIAMI–DADE COUNTY APPROVED MULLIONS (MIN. THK. = 1/8")
INTO METAL STRUCTURES
STEEL : 12 GA. MIN. (Fy = 36 KSI MIN.)
ALUMINUM : 1/8" THK. MIN. (6063–T5 MIN.)
(STEEL IN CONTACT WITH ALUMINUM TO BE PLATED OR PAINTED)

ANCHOR EDGE DISTANCES

INTO CONCRETE AND MASONRY = 2–1/2" MIN.
INTO WOOD STRUCTURE = 1" MIN.
INTO METAL STRUCTURE = 5/8" MIN.

SEALANTS:

FRAME CORNERS AND INSTALLATION SCREWS AT SILL
SEALED WITH CLEAR COLORED SEALANT.

Engr: DR. HUMAYOUN FAROOQ
STRUCTURES
FLA. PE # 16557
C.A.N. 3538

FEB 28 2008

PRODUCT RENEWED
as complying with the Florida
Building Code
Acceptance No 07-1130.04
Expiration Date 04/03/2013
By
Miami Dade Product Control
Division

AL-FAROOQ CORPORATION
ENGINEERS & PRODUCT DEVELOPMENT
1235 S.W. 87 AVE
MIAMI, FLORIDA 33174
TEL. (305) 264-8100 FAX. (305) 262-6978
COMP-ANL\W02-92DAC

SERIES–100 ALUMINUM FIXED LITES (L.M.I.)

DORALUM CORPORATION
7040 N.W. 77 TER.
MEDLEY, FL. 33166
TEL. (305) 884-3922 FAX (305) 884-1464

revisions:

no	date	by	description
A	02.26.08		UPDATED FOR 2004 FBC

date: 10-09-02
scale: 3/8" = 1"
dr. by: HAMID
chk. by:

drawing no.
W02–92

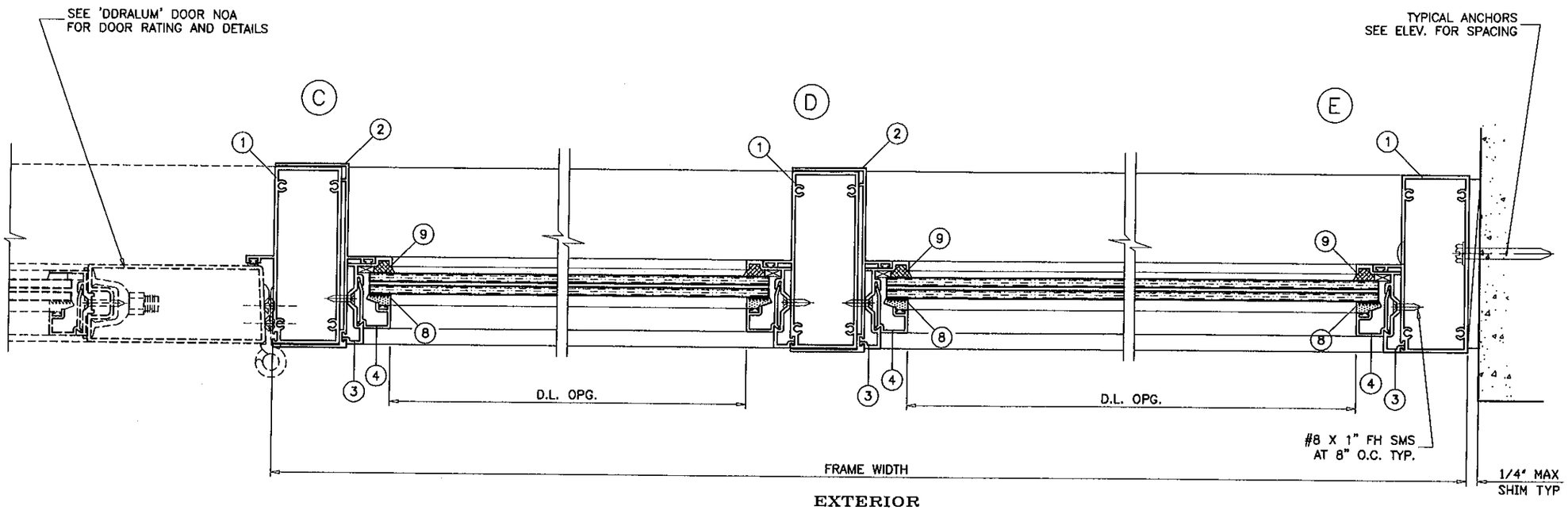

EXTERIOR

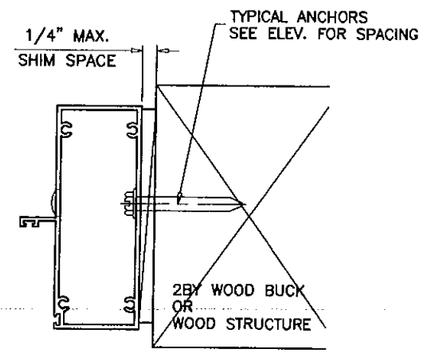

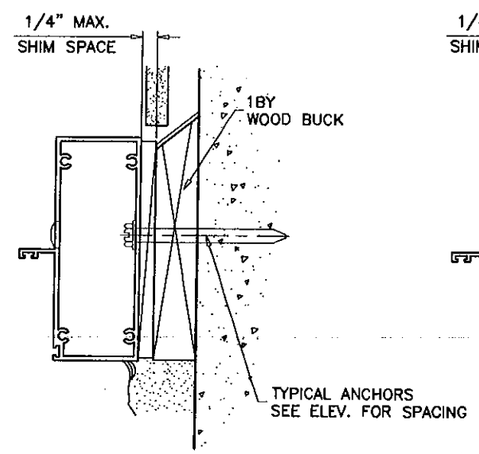

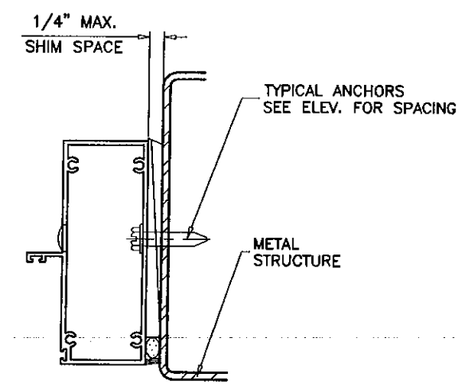

Engr: DR. HUMAYOUN FAROOQ
STRUCTURES
FLA. PE # 16557
C.A.N. 3538

FEB 28 2008

PRODUCT RENEWED
as complying with the Florida Building Code
Acceptance No 07-1130.04
Expiration Date 09/03/2013
By _____
Miami Dade Product Control Division

AL-FAROOQ CORPORATION
ENGINEERS & PRODUCT DEVELOPMENT
1235 S.W. 87 AVE
MIAMI, FLORIDA 33174
TEL. (305) 264-8100 FAX. (305) 262-6978

COMP-ANL\W02-92DAC

SERIES-100 ALUMINUM FIXED LITES (L.M.I.)

DORALUM CORPORATION
7040 N.W. 77 TER.
MEDLEY, FL. 33166
TEL. (305) 884-3922 FAX (305) 884-1464

revisions:

no	date	by	description
A	02.26.08		UPDATED FOR 2004 FBC

date: 10-09-02
scale: 3/8" = 1"
dr. by: HAMID
chk. by:

drawing no.
W02-92

sheet 3 of 4

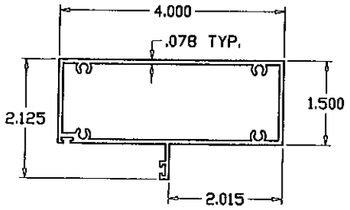

FRAME HEAD/JAMB

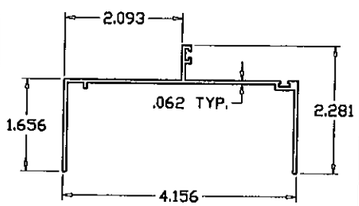

SIDE LITE JAMB

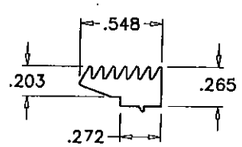

GLAZING VINYL (SCALE 1:1)

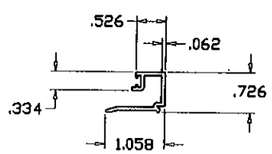

GLASS STOP

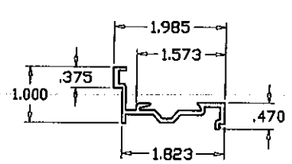

GLAZING ADAPTER

ITEM #	PART #	REQD.	DESCRIPTION	MATERIAL	MANF./SUPPLIER/REMARKS
1	SW-28899	3/DOOR	FRAME HEAD/JAMB	6063-T6	–
2	SW-28897	AS REQD.	SIDELITE JAMB	6063-T6	–
3	DOR-017	AS REQD.	GLAZING ADAPTER	6063-T6	–
4	DOR-019	AS REQD.	GLASS STOP	6063-T6	–
5	–	–	–	–	–
6	#8X3/4" PHSMS	AS REQD.	ASSEMBLY SCREWS		AT ALL FRAME JOINTS
7	–	8/LEAF	1/4" SETTING BLOCK	NYLON	–
8	–	AS REQD.	GLAZING VINYL	VINYL	–
9	SILICONE PLUS	–	SILICONE		DOW CORNING OR EQUIV.

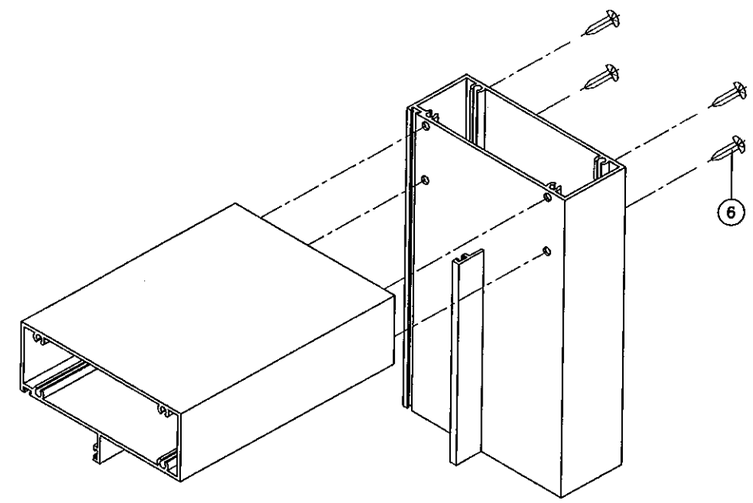

FRAME CORNER

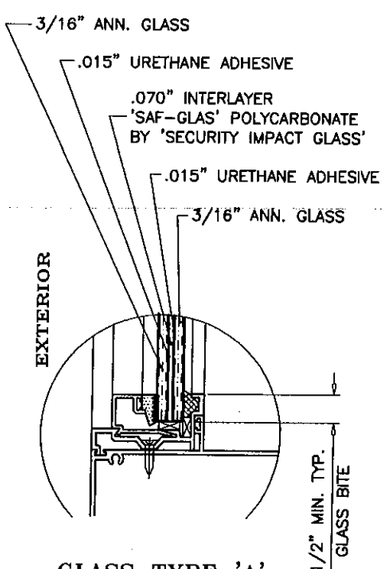

GLASS TYPE 'A'

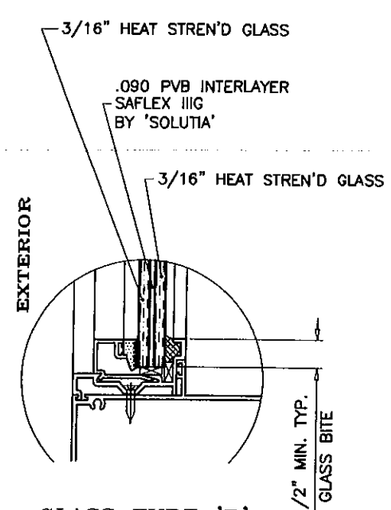

GLASS TYPE 'B'

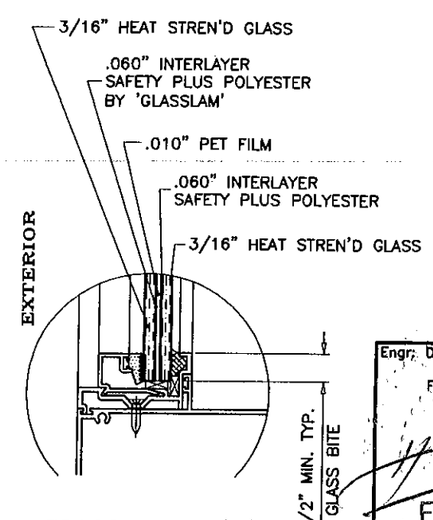

GLASS TYPE 'C'

Engr: DR. HUMAYOUN FAROOQ
STRUCTURES
FLA. PE # 16557
C.A.N. 3538

FEB 28 2008

PRODUCT RENEWED
as complying with the Florida Building Code
Acceptance No 07-1130.04
Expiration Date 04/03/2013
By _____
Miami Dade Product Control Division

AL-FAROOQ CORPORATION
ENGINEERS & PRODUCT DEVELOPMENT
1235 S.W. 87 AVE
MIAMI, FLORIDA 33174
TEL. (305) 264-8100 FAX. (305) 262-6978

COMP-ANL\W02-92DAC

SERIES-100 ALUMINUM FIXED LITES (L.M.I.)

DORALUM CORPORATION
7040 N.W. 77 TER.
MEDLEY, FL. 33166
TEL. (305) 884-3922 FAX (305) 884-1464

revisions:

no	date	by	description
A	02.26.08		UPDATED FOR 2004 FBC

date: 10-09-02
scale: 3/8" = 1"
dr. by: HAMID
chk. by:

drawing no.
W02-92

sheet 4 of 4