MIAMI-DADE COUNTY, FLORIDA
METRO-DADE FLAGLER BUILDING
140 WEST FLAGLER STREET, SUITE 1603
MIAMI, FLORIDA 33130-1563
(305) 375-2901 FAX (305) 372-6339
www.miamidade.gov/buldingcode

BUILDING CODE COMPLIANCE OFFICE (BCCO)
PRODUCT CONTROL DIVISION

NOTICE OF ACCEPTANCE (NOA)

DAB Door Company, Inc.
12195 NW 98th Avenue
Hialeah Gardens, FL 33018

SCOPE:

This NOA is being issued under the applicable rules and regulations governing the use of construction materials. The documentation submitted has been reviewed by Miami-Dade County Product Control Division and accepted by the Board of Rules and Appeals (BORA) to be used in Miami Dade County and other areas where allowed by the Authority Having Jurisdiction (AHJ).

This NOA shall not be valid after the expiration date stated below. The Miami-Dade County Product Control Division (In Miami Dade County) and/or the AHJ (in areas other than Miami Dade County) reserve the right to have this product or material tested for quality assurance purposes. If this product or material fails to perform in the accepted manner, the manufacturer will incur the expense of such testing and the AHJ may immediately revoke, modify, or suspend the use of such product or material within their jurisdiction. BORA reserves the right to revoke this acceptance, if it is determined by Miami-Dade County Product Control Division that this product or material fails to meet the requirements of the applicable building code. This product is approved as described herein, and has been designed to comply with the Florida Building Code including the High Velocity Hurricane Zone.

DESCRIPTION: Sectional Garage Door 18'- 2" Wide.

APPROVAL DOCUMENT: Drawing No. 99-24, titled "Sectional Residential Garage Door", dated 09/22/99 with last revision on 02/28/06, sheets 1 through 3 of 3, prepared by Al-Farooq Corporation, signed and sealed by H. Farooq, P.E., bearing the Miami-Dade County Product Control Renewal stamp with the Notice of Acceptance number and expiration date by the Miami-Dade County Product Control Division.

MISSILE IMPACT RATING: Large and Small Missile Impact

LABELING: Each unit shall bear a permanent label with the manufacturer's name or logo, city, state and following statement: "Miami-Dade County Product Control Approved or MDCPCA", unless otherwise noted herein.

RENEWAL of this NOA shall be considered after a renewal application has been filed and there has been no change in the applicable building code negatively affecting the performance of this product.

TERMINATION of this NOA will occur after the expiration date or if there has been a revision or change in the materials, use, and/or manufacture of the product or process. Misuse of this NOA as an endorsement of any product, for sales, advertising or any other purposes shall automatically terminate this NOA. Failure to comply with any section of this NOA shall be cause for termination and removal of NOA.

LIMITATION: This approval requires the manufacturer to do testing of all coils used to fabricate door panels under this Notice of Acceptance. A minimum of 2 specimens shall be cut from each coil and tensile tested according to ASTM E-8 by a Dade County approved laboratory selected and paid by the manufacturer. Every 3 months, four times a year, the manufacturer shall mail to this office: a copy of the tested reports with confirmation that the specimen were selected from coils at the manufacturer production facilities. And a notarized statement from the manufacturer that only coils with yield strength of 35000 psi or more shall be used to make door panels for Dade County under this Notice of Acceptance

ADVERTISEMENT: The NOA number preceded by the words Miami-Dade County, Florida, and followed by the expiration date may be displayed in advertising literature. If any portion of the NOA is displayed, then it shall be done in its entirety.

INSPECTION: A copy of this entire NOA shall be provided to the user by the manufacturer or its distributors and shall be available for inspection at the job site at the request of the Building Official.

This NOA **renews NOA # 05-0915.11** and consists of this page, evidence page as well as the approval document mentioned above.

The submitted documentation was reviewed by **Carlos M. Utrera, P.E.**

12/14/07

NOA No 07-1203.06
Expiration Date: March 10, 2009
Approval Date: January 3, 2008

DAB Door Company, Inc.

NOTICE OF ACCEPTANCE: EVIDENCE PAGE

A. DRAWINGS

1. Drawing prepared by Al-Farooq Corporation, titled "Sectional Residential Garage Door", Drawing No. 99-24, dated 09/22/99, with last revision on 02/28/06, sheets 1 through 3 of 3, signed and sealed by H. Farooq, P.E.

B. TESTS

1. Test report of large missile impact test per PA 201 and cyclic wind pressure test per PA 203 on " Sectional Residential Garage Door", prepared by Hurricane Engineering & Testing, Inc., report No. HETI 99-825, dated 07/22/99, signed and sealed by H. M. Medina, P.E.
2. Test report of Uniform Static Air Pressure Test Per PA 202 and Force Entry Resistant Test on "Sectional Residential Garage Door", prepared by Hurricane Engineering & Testing, Inc., report No. HETI 99-824, dated 07/22/99, signed and sealed by H. M. Medina, P.E.
   (Evidence Submitted under NOA # 05-0915.11)

C. CALCULATIONS

1. Calculations dated 11/07/99; pages 1 through 4 of 4, prepared by Al-Farooq Corporation, signed and sealed by H. Farooq, P.E.
2. Calculations dated 08/09/05, page 1 through 5 of 5, prepared Al-Farooq Corporation, signed and sealed by H. Farooq, P.E.
   (Evidence Submitted under NOA # 05-0915.11)

D. MATERIAL CERTIFICATIONS

1. Test report of Tensile Test per ASTM E 8, report no. HETI 99-T175, prepared by Hurricane Engineering & Testing, Inc, dated 08/10/99, signed and sealed by H. M. Medina, P.E.
   (Evidence Submitted under NOA # 05-0915.11)

E. QUALITY ASSURANCE

1. Miami Dade Building Code Compliance Office (BCCO).

F. STATEMENTS

1. Letter of Code Compliance prepared by Al-Farooq Corporation, dated 08/22/05 signed and sealed by H. Farooq, P.E.
2. Letter of No financial interest issued by Al-Farooq Corporation on 11/09/99 signed and sealed by H. Farooq PE.
3. Tensile test and Affidavit prepared by DAB Door Company Inc on 01/10/06 signed by R. Berger and notarized by T. Bolanos.
   (Evidence Submitted under NOA # 05-0915.11)

G. OTHER

1. Testing contract letter issued by Hurricane Engineering & Testing, Inc., dated 11/26/2007, signed by Syed Waqar Ali, Ph.D.

12/14/07

Carlos M. Utrera, P.E.
Product Control Examiner
NOA No 07-1203.06
Expiration Date: March, 10, 2009
Approval Date: January 3, 2008

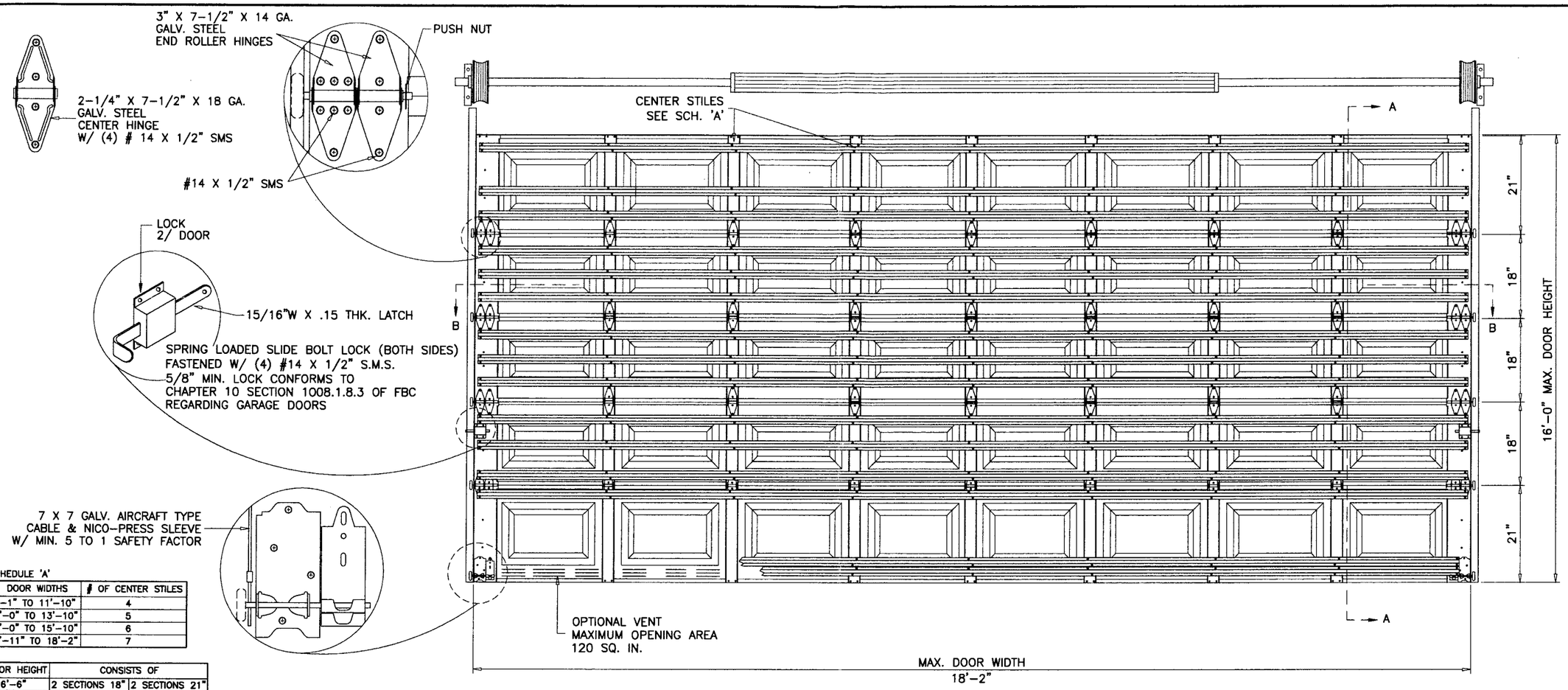

SCHEDULE 'A'

DOOR WIDTHS	# OF CENTER STILES
9'-1" TO 11'-10"	4
12'-0" TO 13'-10"	5
14'-0" TO 15'-10"	6
15'-11" TO 18'-2"	7

DOOR HEIGHT	CONSISTS OF	
6'-6"	2 SECTIONS 18"	2 SECTIONS 21"
6'-9"	1 SECTION 18"	3 SECTIONS 21"
7'	4 SECTIONS 21"	–
7'-3"	–	–
7'-6"	5 SECTIONS 18"	–
7'-9"	4 SECTIONS 18"	1 SECTION 21"
8'	3 SECTIONS 18"	2 SECTIONS 21"
8'-3"	2 SECTIONS 18"	3 SECTIONS 21"
8'-6"	1 SECTION 18"	4 SECTIONS 21"
8'-9"	5 SECTIONS 21"	–
9'	6 SECTIONS 18"	–
9'-3"	5 SECTIONS 18"	1 SECTION 21"
9'-6"	4 SECTIONS 18"	2 SECTIONS 21"
9'-9"	3 SECTIONS 18"	3 SECTIONS 21"
10'	2 SECTIONS 18"	4 SECTIONS 21"
10'-3"	1 SECTION 18"	5 SECTIONS 21"
10'-6"	6 SECTIONS 21"	–
10'-9"	6 SECTIONS 18"	1 SECTION 21"
11'	5 SECTIONS 18"	2 SECTIONS 21"
11'-3"	4 SECTIONS 18"	3 SECTIONS 21"
11'-6"	3 SECTIONS 18"	4 SECTIONS 21"
11'-9"	2 SECTIONS 18"	5 SECTIONS 21"
12'	1 SECTIONS 18"	6 SECTIONS 21"
12'-3"	7 SECTIONS 21"	–
12'-6"	6 SECTIONS 18"	2 SECTIONS 21"
12'-9"	5 SECTIONS 18"	3 SECTIONS 21"
13'	4 SECTIONS 18"	4 SECTIONS 21"
13'-3"	3 SECTIONS 18"	5 SECTIONS 21"
13'-6"	2 SECTIONS 18"	6 SECTIONS 21"
13'-9"	1 SECTION 18"	7 SECTIONS 21"
14'	8 SECTIONS 21"	–
14'-3"	6 SECTIONS 18"	3 SECTIONS 21"
14'-6"	5 SECTIONS 18"	4 SECTIONS 21"
14'-9"	4 SECTIONS 18"	5 SECTIONS 21"
15'	3 SECTIONS 18"	6 SECTIONS 21"
15'-3"	2 SECTIONS 18"	7 SECTIONS 21"
15'-6"	1 SECTION 18"	8 SECTIONS 21"
15'-9"	9 SECTIONS 21"	–
16'	6 SECTIONS 18"	4 SECTIONS 21"

INSIDE ELEVATION

RAISED PANEL EMBOSSED DOOR

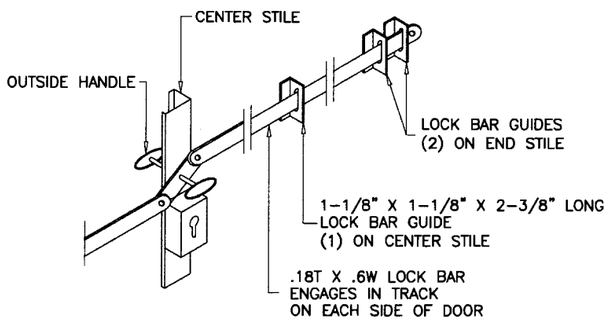

OUTSIDE KEYED LOCK

LOCK BAR LOCKING SHOWN
ALTERNATE TO LOCKS SHOWN ABOVE

DAB DOOR MODEL 824
MAX. SIZE 18'-2" WIDE X 16'-0" HIGH

DESIGN PRESSURE RATING = + 45.0 PSF
– 50.0 PSF

THIS PRODUCT IS RATED FOR LARGE MISSILE IMPACT

GENERAL NOTES

1. THIS PRODUCT HAS BEEN DESIGNED AND TESTED TO COMPLY WITH THE REQUIREMENTS OF THE FLORIDA BUILDING CODE 2004 EDITION INCLUDING HIGH VELOCITY HURRICANE ZONE.
2. ANCHORS SHALL BE AS LISTED, SPACED AS SHOWN ON DETAILS. ANCHOR EMBEDMENT TO BASE MATERIAL SHALL BE BEYOND WALL DRESSING OR STUCCO.
3. ALL BOLTS, NUTS AND WASHERS SHALL BE ZINC PLATED CARBON STEEL.
4. ANCHORING OR LOADING CONDITIONS OTHER THAN THOSE SHOWN IN THESE DETAILS ARE NOT PART OF THIS APPROVAL.
5. A 33% INCREASE IN ALLOWABLE STRESS IS USED IN DESIGN OF WOOD ANCHORS ONLY.

Engr: DR. HUMAYOUN FAROOQ
STRUCTURES
FLA. PE # 16557
C.A.N. 3538

OCT 29 2007

PROCESSED BY
Miami-Dade County Building & Planning
Building Code
Application No. 07-1203.04
Expiration 03/10/2009
By
Miami-Dade County Building Code Compliance Office

AL-FAROOQ CORPORATION
ENGINEERS & PRODUCT DEVELOPMENT
1235 S.W. 87 AVE
MIAMI, FLORIDA 33174
TEL. (305) 264-8100 FAX. (305) 262-6978

GARAGE\99-24DAB

SECTIONAL RESIDENTIAL GARAGE DOOR

DAB DOORS INC.
12195 N.W. 98 TH. AVE.
HIALEAH GARDENS, FL. 33018
TEL. (305) 556 - 6624

revisions:

no	date	by	description
A	1.14.99		GENERAL REVISION
B	02.01.03		UPDATED FOR FBC
C	8.11.05	H	UPDATED FOR 2004 FBC
D	02.28.06		REV. PER BCCO COMMENTS

date: 09-22-99
scale: 1/2"=1'-0"
dr. by: HAMID
chk. by:

drawing no.
99-24

sheet 1 of 3

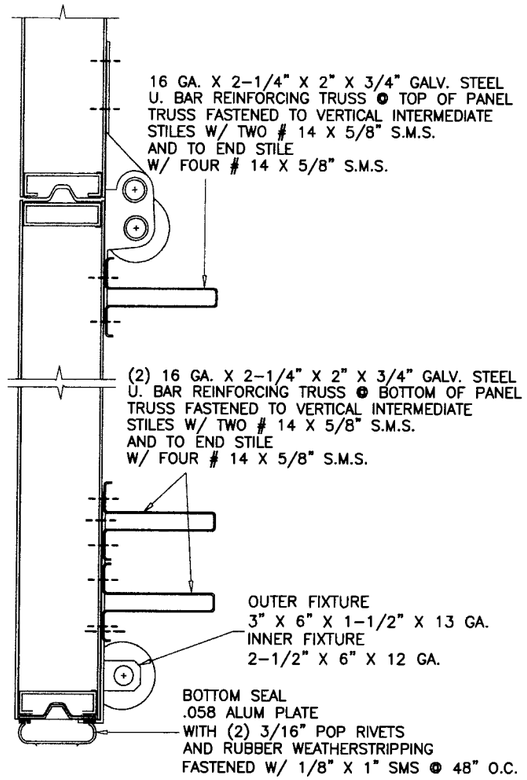

1ST SECTION (BOTTOM)

REINFORCING

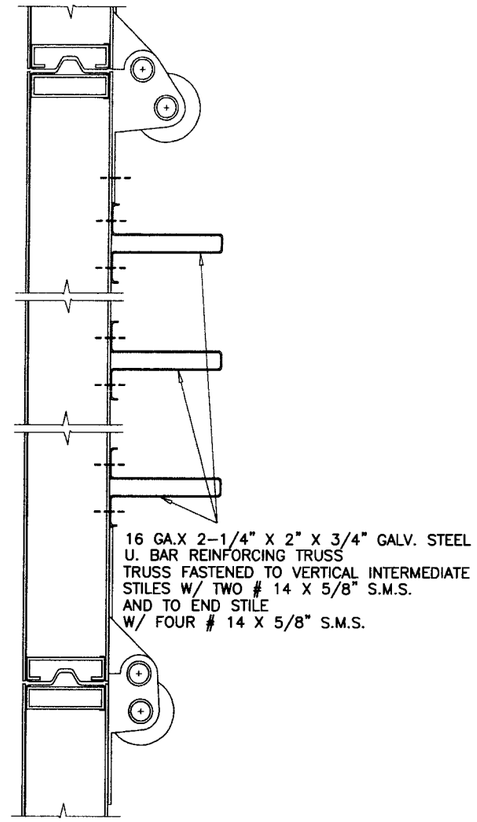

INTERMEDIATE SECTIONS

REINFORCING

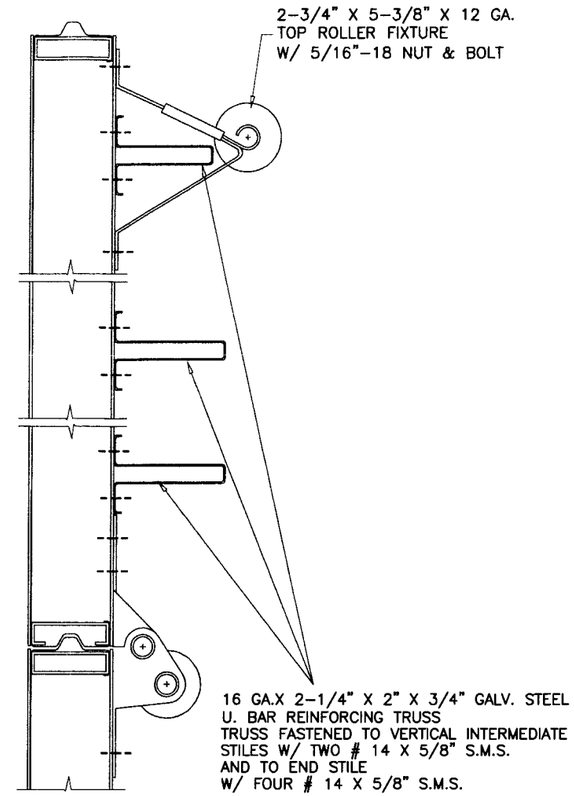

TOP SECTION

REINFORCING

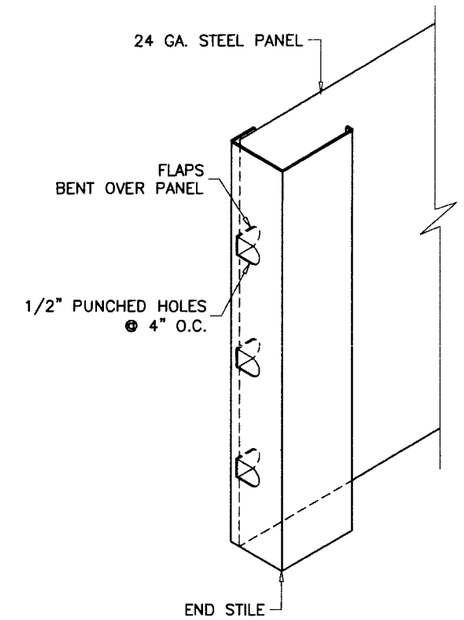

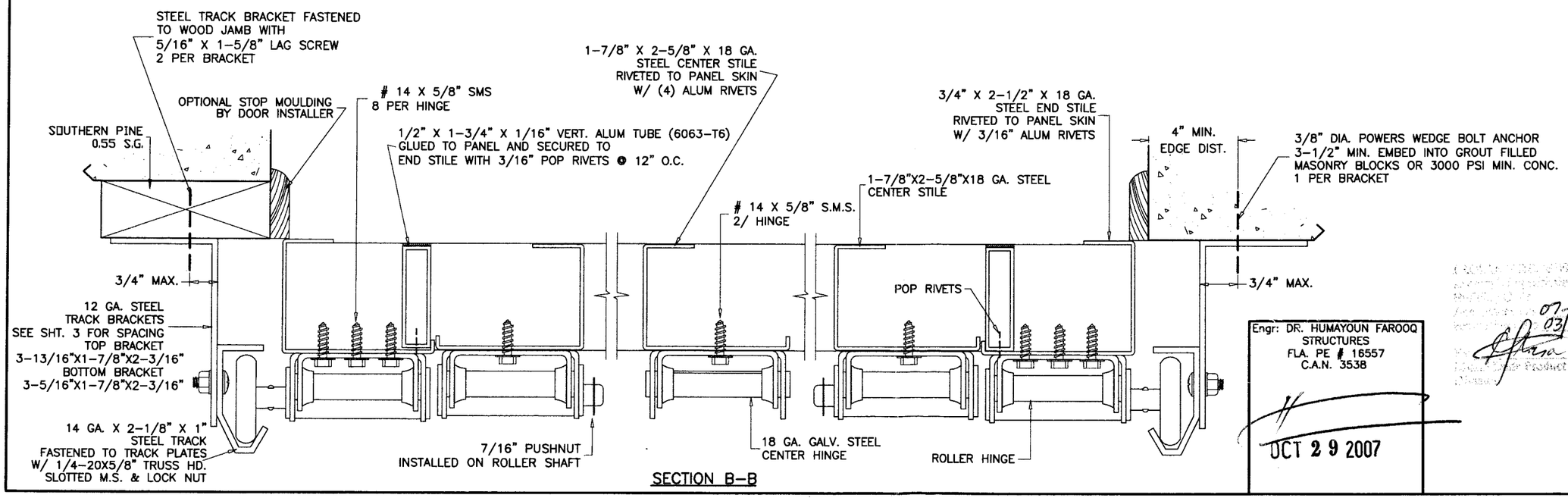

SECTION B-B

Engr: DR. HUMAYOUN FAROOQ
STRUCTURES
FLA. PE # 16557
C.A.N. 3538

OCT 29 2007

07-1203.06
03/10/2009

AL-FAROOQ CORPORATION
ENGINEERS & PRODUCT DEVELOPMENT
1235 S.W. 87 AVE
MIAMI, FLORIDA 33174
TEL. (305) 264-8100 FAX. (305) 262-6978

GARAGE\99-24DAB

SECTIONAL RESIDENTIAL GARAGE DOOR

DAB DOORS INC.
12195 N.W. 98 TH. AVE.
HIALEAH GARDENS, FL. 33018
TEL. (305) 556 - 6624

revisions:

no	date	by	description
C	8.11.05	H	ANCHORS REV.
D	02.28.06		REV. PER BCCO COMMENTS

date: 09-22-99

scale: -

dr. by: HAMID

chk. by:

drawing no.
99-24

sheet 2 of 3

DOOR HEIGHT	* SECTION HEIGHTS					BRACKET PLACEMENTS							
	1ST	2ND	3RD	4TH	5TH	B1	B2	B3	B4	B5	B6	B7	B8
6'-0"	18"	18"	18"	18"	N/A	1"	11-3/4"	23"	34"	45"	56"	67"	–
6'-6"	21"	18"	18"	21"	N/A	1"	11-3/4"	23"	34"	45"	56"	67"	–
7'-0"	21"	21"	21"	21"	N/A	1"	11-3/4"	23"	34"	45"	56"	67"	78-1/4"
7'-6"	18"	18"	18"	18"	18"	1"	11-3/4"	23"	34"	45"	56"	67"	78-1/4"
8'-0"	21"	18"	18"	18"	21"	1"	11-3/4"	23"	34"	45"	56"	67"	78-1/4"

*–SECTIONS ARE NUMBERED STARTING AT THE BOTTOM
FOR DOORS MORE THAN 8 FT. HIGH, USE ADDITIONAL TRACK BRACKETS AT 10" O.C.

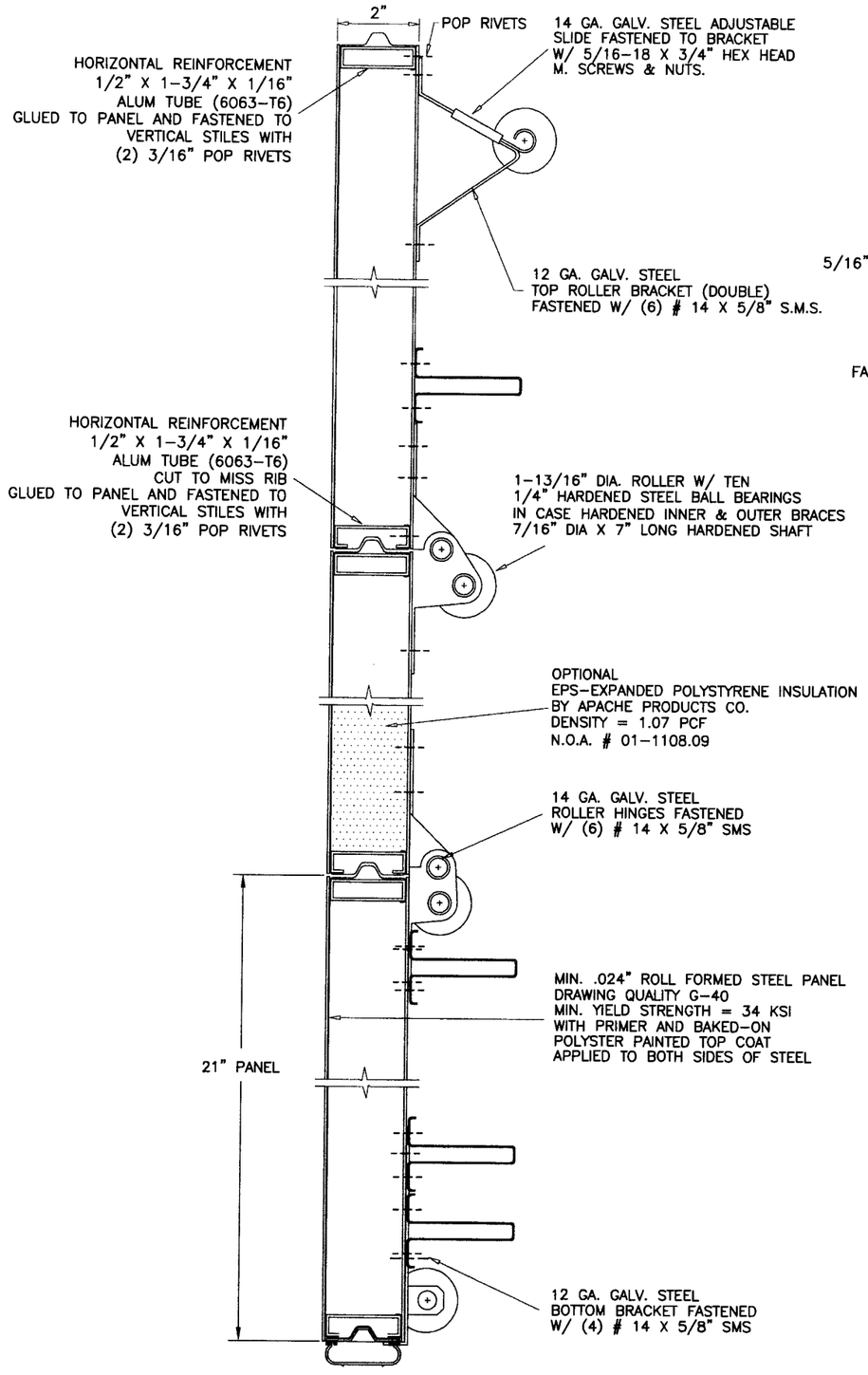

SECTION A–A

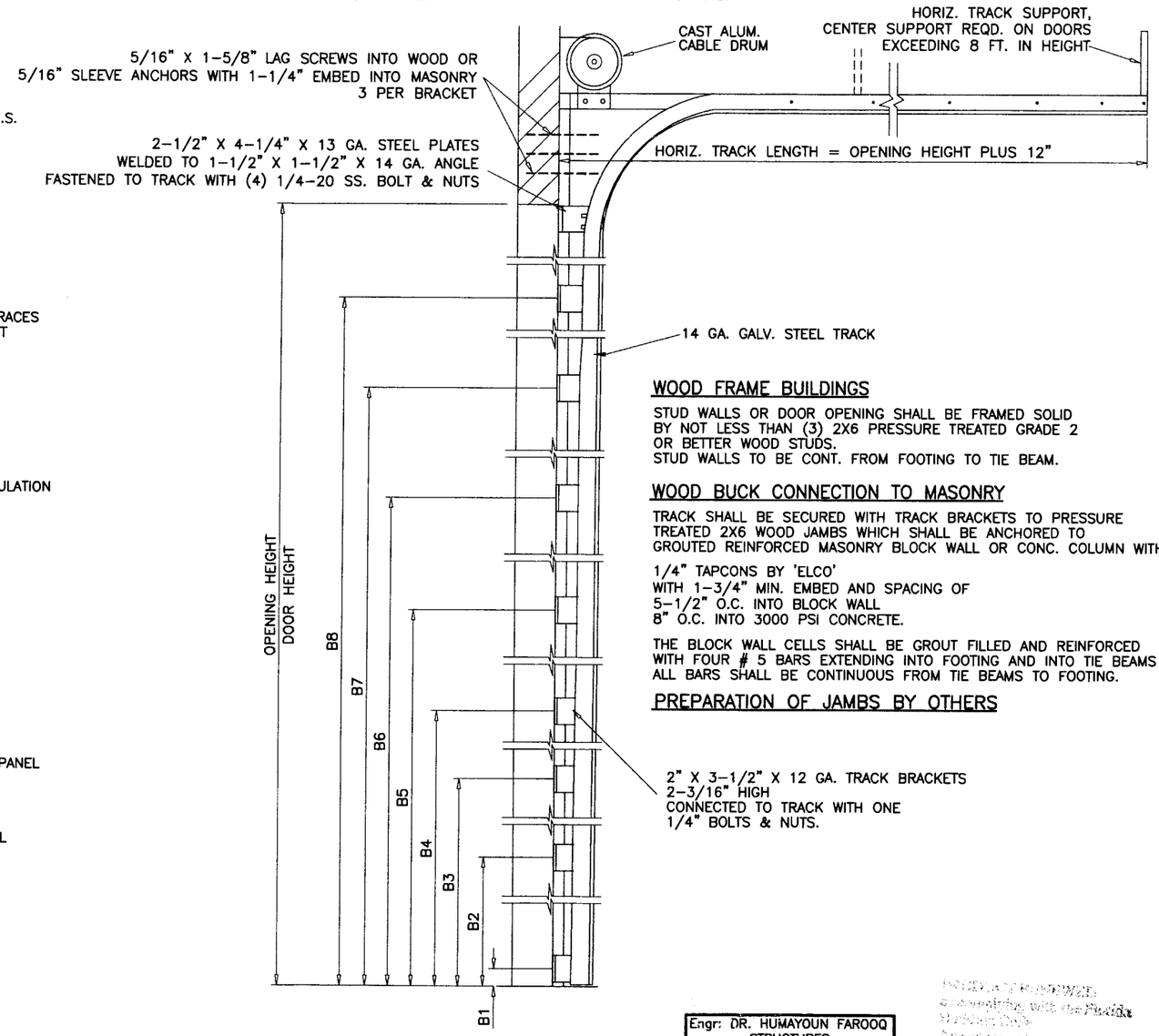

TRACK CONFIGURATION

WOOD FRAME BUILDINGS

STUD WALLS OR DOOR OPENING SHALL BE FRAMED SOLID BY NOT LESS THAN (3) 2X6 PRESSURE TREATED GRADE 2 OR BETTER WOOD STUDS.
STUD WALLS TO BE CONT. FROM FOOTING TO TIE BEAM.

WOOD BUCK CONNECTION TO MASONRY

TRACK SHALL BE SECURED WITH TRACK BRACKETS TO PRESSURE TREATED 2X6 WOOD JAMBS WHICH SHALL BE ANCHORED TO GROUTED REINFORCED MASONRY BLOCK WALL OR CONC. COLUMN WITH

1/4" TAPCONS BY 'ELCO'
WITH 1-3/4" MIN. EMBED AND SPACING OF
5-1/2" O.C. INTO BLOCK WALL
8" O.C. INTO 3000 PSI CONCRETE.

THE BLOCK WALL CELLS SHALL BE GROUT FILLED AND REINFORCED WITH FOUR # 5 BARS EXTENDING INTO FOOTING AND INTO TIE BEAMS ALL BARS SHALL BE CONTINUOUS FROM TIE BEAMS TO FOOTING.

PREPARATION OF JAMBS BY OTHERS

Engr: DR. HUMAYOUN FAROOQ
STRUCTURES
FLA. PE # 16557
C.A.N. 3538

OCT 2 9 2007

AL-FAROOQ CORPORATION
ENGINEERS & PRODUCT DEVELOPMENT
1235 S.W. 87 AVE
MIAMI, FLORIDA 33174
TEL. (305) 264-8100 FAX. (305) 262-6978

GARAGE\99-24DAB

SECTIONAL RESIDENTIAL GARAGE DOOR

DAB DOORS INC.
12195 N.W. 98 TH. AVE.
HIALEAH GARDENS, FL. 33018
TEL. (305) 556 - 6624

revisions:

no	date	by	description
C	8.11.05	H	ANCHOR SPACING REV.
D	02.28.06		REV. PER BCCO COMMENTS

date: 09-22-99
scale: –
dr. by: HAMID
chk. by:

drawing no. 99-24

sheet 3 of 3