MIAMI-DADE

BUILDING CODE COMPLIANCE OFFICE (BCCO)
PRODUCT CONTROL DIVISION

MIAMI-DADE COUNTY, FLORIDA
METRO-DADE FLAGLER BUILDING
140 WEST FLAGLER STREET, SUITE 1603
MIAMI, FLORIDA 33130-1563
(305) 375-2901 FAX (305) 375-2908

NOTICE OF ACCEPTANCE (NOA)

Clay Forever, LLC.
6801 NW 77th Avenue
Miami, FL 33166

SCOPE:

This NOA is being issued under the applicable rules and regulations governing the use of construction materials. The documentation submitted has been reviewed by Miami-Dade County Product Control Division and accepted by the Board of Rules and Appeals (BORA) to be used in Miami Dade County and other areas where allowed by the Authority Having Jurisdiction (AHJ).

This NOA shall not be valid after the expiration date stated below. The Miami-Dade County Product Control Division (In Miami Dade County) and/or the AHJ (in areas other than Miami Dade County) reserve the right to have this product or material tested for quality assurance purposes. If this product or material fails to perform in the accepted manner, the manufacturer will incur the expense of such testing and the AHJ may immediately revoke, modify, or suspend the use of such product or material within their jurisdiction. BORA reserves the right to revoke this acceptance, if it is determined by Miami-Dade County Product Control Division that this product or material fails to meet the requirements of the applicable building code.

This product is approved as described herein, and has been designed to comply with the Florida Building Code including the High Velocity Hurricane Zone of the Florida Building Code.

DESCRIPTION: Altusa Flat Clay Roof Tile

LABELING: Each unit shall bear a permanent label with the manufacturer's name or logo, city, state and following statement: "Miami-Dade County Product Control Approved", unless otherwise noted herein.

RENEWAL of this NOA shall be considered after a renewal application has been filed and there has been no change in the applicable building code negatively affecting the performance of this product.

TERMINATION of this NOA will occur after the expiration date or if there has been a revision or change in the materials, use, and/or manufacture of the product or process. Misuse of this NOA as an endorsement of any product, for sales, advertising or any other purposes shall automatically terminate this NOA. Failure to comply with any section of this NOA shall be cause for termination and removal of NOA.

ADVERTISEMENT: The NOA number preceded by the words Miami-Dade County, Florida, and followed by the expiration date may be displayed in advertising literature. If any portion of the NOA is displayed, then it shall be done in its entirety.

INSPECTION: A copy of this entire NOA shall be provided to the user by the manufacturer or its distributors and shall be available for inspection at the job site at the request of the Building Official.

This renews NOA #05-0901.09 and consists of pages 1 through 5.
The submitted documentation was reviewed by Alex Tigera.

ROOFING ASSEMBLY APPROVAL

Category: Roofing

Sub-Category: Roofing Tiles

Material: Clay

1. SCOPE

This renews roofing system using **Altusa Flat Clay Roof Tiles**, as manufactured by **Interceramic** in Venezuela and distributed by **Clay Forever, LLC.,** and described in Section 2 of this Notice of Acceptance. For locations where the pressure requirements, as determined by applicable Building Code does not exceed the design pressure values obtained by calculations in compliance with RAS 127 using the values listed in section 4 herein. The attachment calculations shall be done as a moment based system.

2. PRODUCT DESCRIPTION

Manufactured by Applicant	Dimensions	Test Specifications	Product Description
Altusa Flat Clay Roof Tile	L = 14.6" W = 11" ½" thick nominal	TAS 112	Flat profile clay roof tile. For direct deck or batten nail-on, mortar set or adhesive set applications.
Trim Pieces	Length: varies Width: varies varying thickness	TAS 112	Accessory trim, clay roof pieces for use at hips, rakes, ridges and valley terminations. Manufactured for each tile profile.

2.1 SUBMITTED EVIDENCE:

Test Agency	Test Identifier	Test Name/Report	Date
The Center for Applied Engineering, Inc.	257987-A	Static Uplift Testing PA 101 (Mortar Set)	05/19/97
The Center for Applied Engineering, Inc.	257987-B	Static Uplift Testing PA 101 (Adhesive Set)	05/19/97
The Center for Applied Engineering, Inc.	257987-C	Static Uplift Testing PA 101 (2 Screws)	05/19/97
The Center for Applied Engineering, Inc.	257987-D	Static Uplift Testing PA 101 (2 Screws)	05/19/97
IBA Consultants, Inc.	2397-91	Physical Properties ASTM C 1167	01/10/06
Walker Engineering, Inc.	Calculations	Aerodynamic Multiplier	March 1999

3. LIMITATIONS

3.1 Fire classification is not part of this acceptance.

3.2 For mortar or adhesive set tile applications, a static field uplift test shall be performed in accordance with RAS 106.

3.3 Applicant shall retain the services of a Miami-Dade County Certified Laboratory to perform quarterly test in accordance with TAS 112, appendix 'A'. Such testing shall be submitted to the Building Code Compliance Office for review.

3.4 Minimum underlayment shall be in compliance with the applicable Roofing Applications Standards listed section 4.1 herein.

3.5 30/90 hot mopped underlayment applications may be installed perpendicular to the roof slope unless stated otherwise by the underlayment material manufacturers published literature.

3.6 This acceptance is for wood deck applications. Minimum deck requirements shall be in compliance with applicable building code.

3.7 May be installed on slopes 7:12 and greater.

4. INSTALLATION

4.1 Clay Forever, LLC., 'Altusa Flat Clay Roof Tile and its components shall be installed in strict compliance with Roofing Application Standard RAS 118, RAS 119, and RAS 120.

4.2 Data For Attachment Calculations

Table 1: Average Weight (W) and Dimensions (l x w)

Tile Profile	Weight-W (lbf)	Length-l (ft)	Width-w (ft)
Flat Tile	6.1	1.22	.96

Table 2: Aerodynamic Multipliers - λ (ft^3)

Tile Profile	λ (ft^3) Batten Application	λ (ft^3) Direct Deck Application
Flat Tile	0.200	0.217

Table 3: Restoring Moments due to Gravity - M_g (ft-lbf)

Tile Profile	2":12"		3":12"		4":12"		5":12"		6":12"		7":12" or greater	
	Battens	Direct Deck	Battens	Direct Deck	Battens	Direct Deck	Battens	Direct Deck	Battens	Direct Deck	Battens	Direct Deck
Flat Tile	3.86	4.60	3.81	4.51	3.78	4.47	3.68	4.36	3.56	4.22	3.49	4.13

Table 3: Attachment Resistance Expressed as a Moment - M_f (ft-lbf) for Nail-On Systems				
Tile Profile	**Fastener Type**	**Direct Deck (min 15/32" plywood)**	**Direct Deck (min. 19/32" plywood)**	**Battens**
Flat Tile	2-10d Ring Shank Nails	30.9	38.1	17.2
	1-10d Smooth or Screw Shank Nail	7.3	9.8	4.9
	2-10d Smooth or Screw Shank Nails	14.0	18.8	7.4
	1-#8 Screw	30.8	30.8	18.2
	2-#8 Screws	51.7	51.7	24.4
	1-10d Smooth or Screw Shank Nail (Field Clip)	24.3	24.3	24.2
	1-10d Smooth or Screw Shank Nail (Eave Clip)	19.0	19.0	22.1
	2-10d Smooth or Screw Shank Nails (Field Clip)	35.5	35.5	34.8
	2-10d Smooth or Screw Shank Nails (Eave Clip)	31.9	31.9	32.2
	2-10d Ring Shank Nails[1]	50.3	65.5	48.3

1 Installation with a 4" tile headlap and fasterners are located a min. of 2½" from head of tile.

Table 4: Attachment Resistance Expressed as a Moment M_f (ft-lbf) for Two Patty Adhesive Set Systems		
Tile Profile	**Tile Application**	**Minimum Attachment Resistance**
Flat Tile	Adhesive[2]	31.3[3]

2 See manufactures component approval for installation requirements.

3 Flexible Products Company TileBond Average weight per patty 13.9 grams.
Polyfoam Product, Inc. Average weight per patty 8 grams.

Table 4B: Attachment Resistance Expressed as a Moment - M_f (ft-lbf) for Mortar Set Systems		
Tile Profile	**Tile Application**	**Attachment Resistance**
Flat Tile	Mortar Set	58.4[6]

5 Quickcrete Roof Tile Mortar #1140

5. LABELING

All tiles shall bear the imprint or identifiable marking of the manufacturer's name or logo as seen below, or following statement: "Miami-Dade County Product Control Approved".

ALTUSA FLAT TILE MADE IN VENEZUELA

LABEL FOR ALTUSA FLAT CLAY ROOF TILE
(LOCATED ON THE TOPSIDE OF TILE)

6. BUILDING PERMIT REQUIREMENTS

6.1 Application for building permit shall be accompanied by copies of the following:

6.1.1 This Notice of Acceptance.

6.1.2 Any other documents required by the Building Official or applicable building code in order to properly evaluate the installation of this system.

PROFILE DRAWINGS
ALTUSA FLAT CLAY ROOF TILE

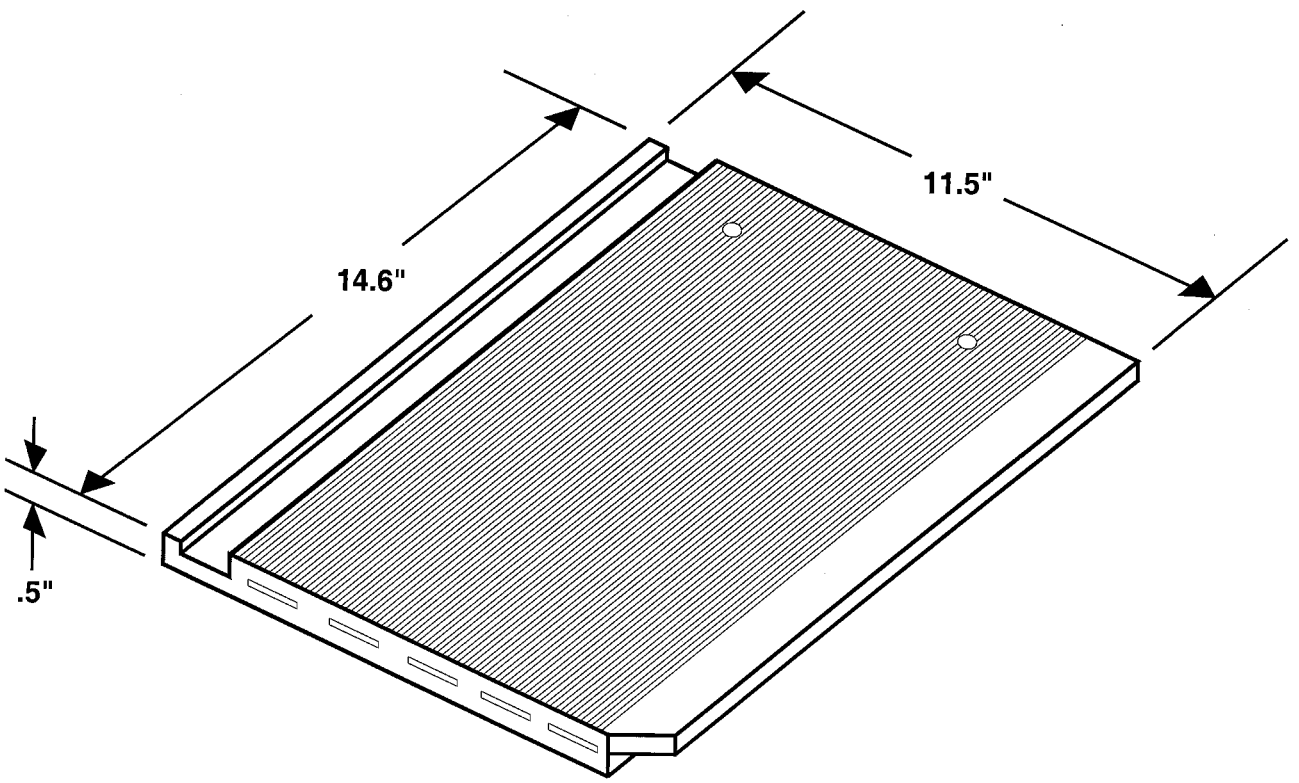

END OF THIS ACCEPTANCE