MIAMI-DADE COUNTY
BUILDING CODE COMPLIANCE OFFICE (BCCO)
PRODUCT CONTROL DIVISION

MIAMI-DADE COUNTY, FLORIDA
METRO-DADE FLAGLER BUILDING
140 WEST FLAGLER STREET, SUITE 1603
MIAMI, FLORIDA 33130-1563
(305) 375-2901 FAX (305) 372-6339
www.maimidade.gov/buildingcode

NOTICE OF ACCEPTANCE (NOA)

Jeld-Wen, Inc (OR)
3737 Lakeport Blvd.
Klamath Falls, OR 97601

SCOPE:

This NOA is being issued under the applicable rules and regulations governing the use of construction materials. The documentation submitted has been reviewed by Miami-Dade County Product Control Division and accepted by the Board of Rules and Appeals (BORA) to be used in Miami Dade County and other areas where allowed by the Authority Having Jurisdiction (AHJ).

This NOA shall not be valid after the expiration date stated below. The Miami-Dade County Product Control Division (In Miami Dade County) and/or the AHJ (in areas other than Miami Dade County) reserve the right to have this product or material tested for quality assurance purposes. If this product or material fails to perform in the accepted manner, the manufacturer will incur the expense of such testing and the AHJ may immediately revoke, modify, or suspend the use of such product or material within their jurisdiction. BORA reserves the right to revoke this acceptance, if it is determined by Miami-Dade County Product Control Division that this product or material fails to meet the requirements of the applicable building code.

This product is approved as described herein, and has been designed to comply with the Florida Building Code, including the High Velocity Hurricane Zone.

DESCRIPTION:

Series "Jeld-Wen Custom Collection" Aluminum Clad Wood Operable Casement Window - L.M.I.

APPROVAL DOCUMENT: Drawing No. **07-JWN-0004**, titled "Series Custom Collection Operable Casement Window Large Missile Impact Resistant", sheets 1 through 7 of 7, dated 10/17/07 with the latest revision dated 10/07/08, prepared by Engineering Express, signed and sealed by Frank L. Bennardo, P.E., bearing the Miami-Dade County Product Control Approval stamp with the Notice of Acceptance number and Approval date by the Miami-Dade County Product Control Division.

MISSILE IMPACT RATING: Large and Small Missile Impact Resistant

LABELING: Each unit shall bear a permanent label with the manufacturer's name or logo, city, state and following statement: "Miami-Dade County Product Control Approved", unless otherwise noted herein.

RENEWAL of this NOA shall be considered after a renewal application has been filed and there has been no change in the applicable building code negatively affecting the performance of this product.

TERMINATION of this NOA will occur after the expiration date or if there has been a revision or change in the materials, use, and/or manufacture of the product or process. Misuse of this NOA as an endorsement of any product, for sales, advertising or any other purposes shall automatically terminate this NOA. Failure to comply with any section of this NOA shall be cause for termination and removal of NOA.

ADVERTISEMENT: The NOA number preceded by the words Miami-Dade County, Florida, and followed by the expiration date may be displayed in advertising literature. If any portion of the NOA is displayed, then it shall be done in its entirety.

INSPECTION: A copy of this entire NOA shall be provided to the user by the manufacturer or its distributors and shall be available for inspection at the job site at the request of the Building Official.

This NOA consists of this page 1 and evidence pages E-1 and E-2, as well as approval document mentioned above.

The submitted documentation was reviewed by **Jaime D. Gasçon, P.E.**

MIAMI-DADE COUNTY APPROVED

J. Gascon
10/22/08

Jeld-Wen, Inc (OR)

NOTICE OF ACCEPTANCE: EVIDENCE SUBMITTED

A. DRAWINGS

1. Manufacturer's die drawings and sections.
2. Drawing No **07-JWN-0004**, titled "Series Custom Collection Operable Casement Window Large Missile Impact Resistant", sheets 1 through 7 of 7, dated 10/17/07 with the latest revision dated 10/07/08, prepared by Engineering Express, signed and sealed by Frank L. Bennardo, P.E.

B. TESTS

1. Test reports on: 1) Air Infiltration Test, per FBC, TAS 202-94
   2) Uniform Static Air Pressure Test, Loading per FBC TAS 202-94
   3) Water Resistance Test, per FBC, TAS 202-94
   4) Large Missile Impact Test per FBC, TAS 201-94
   5) Cyclic Wind Pressure Loading per FBC, TAS 203-94
   6) Forced Entry Test, per FBC 2411 3.2.1, TAS 202-94

   Along with marked-up drawings and installation diagram of Casement Window, prepared by National Certified Testing Laboratories, Inc., Test Report No. **NCTL 210-3438-1**, dated 06/30/07, signed and sealed by Gerald J. Ferrara, P.E.

C. CALCULATIONS

1. Anchor verification calculations and structural analysis, complying with FBC-2004, prepared by Engineering Express, dated 11/01/07 and 10/07/08, signed and sealed by Frank L. Bennardo, P.E.
   Complies with ASTM E1300-02

D. QUALITY ASSURANCE

1. Miami Dade Building Code Compliance Office (BCCO).

E. MATERIAL CERTIFICATIONS

1. Notice of Acceptance No. **07-1116.04** issued to E.I. DuPont DeNemours & Co., Inc. for their "**DuPont Sentry Glass ® Plus**" dated 01/03/08, expiring on 01/14/12.

F. STATEMENTS

1. Statement letter of conformance, dated December 10, 2007, signed and sealed by Frank L. Bennardo, P.E.
2. Statement letter of no financial interest, dated December 130, 2007, signed and sealed by Frank L. Bennardo, P.E.
3. Laboratory compliance letter for Test Report No. **NCTL 210-3438-1**, issued by National Certified Testing Laboratories, Inc., dated July 30, 2007, signed and sealed by Gerald J. Ferrara, P.E.

Jaime D. Gasçon, P.E.
Chief, Product Control Division
NOA No. 07-1218.07
Expiration Date: November 13, 2013
Approval Date: November 13, 2008

NOTICE OF ACCEPTANCE: EVIDENCE SUBMITTED

F. STATEMENTS (CONTINUED)

4. Laboratory addendum letter of the galvanized strap and permanent reading at the sill for Test Report No. **NCTL 210-3438-1**, issued by National Certified Testing Laboratories, Inc., dated September 08, 2008, signed and sealed by Gerald J. Ferrara, P.E.
5. Laboratory addendum letter of the acrylic sealant of the interior glazing leg for Test Report No. **NCTL 210-3438-1**, issued by National Certified Testing Laboratories, Inc., dated September 08, 2008, signed and sealed by Gerald J. Ferrara, P.E.

G. OTHERS

1. None

Jaime D. Gasçon, P.E.
Chief, Product Control Division
NOA No. 07-1218.07
Expiration Date: November 13, 2013
Approval Date: November 13, 2008

CUSTOM COLLECTION OPERABLE CASEMENT WINDOW

LARGE MISSILE IMPACT RESISTANT

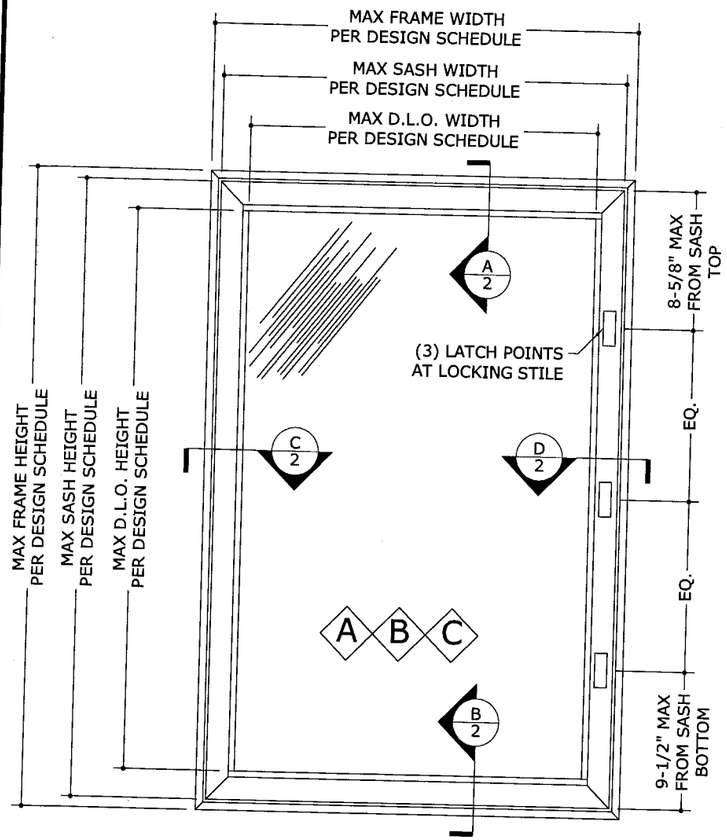

NOTE: MAXIMUM FRAME DIMENSIONS DO NOT INCLUDE INTEGRAL NAILING FIN.

1/1 TYPICAL ELEVATION

N.T.S. EXTERIOR ELEV

DESIGN SCHEDULE

FRAME HEIGHT	SASH HEIGHT	D.L.O. HEIGHT	18"	20"	24"	28"	30"	32"	36"	FRAME WIDTH
			16-1/8"	18-1/8"	22-1/8"	26-1/8"	28-1/8"	30-1/8"	34-1/8"	SASH WIDTH
			13"	15"	19"	23"	25"	27"	31"	D.L.O. WIDTH
18"	17-1/4"	12-1/2"	+65/-90	+65/-90	+65/-90	+65/-90	+65/-90	+65/-90	+65/-75	MAXIMUM ALLOWABLE DESIGN PRESSURES (PSF)
20"	19-1/4"	14-1/2"	+65/-90	+65/-90	+65/-90	+65/-90	+65/-90	+65/-90	+65/-75	
24"	23-1/4"	18-1/2"	+65/-90	+65/-90	+65/-90	+65/-90	+65/-90	+65/-90	+65/-75	
30"	29-1/4"	24-1/2"	+65/-90	+65/-90	+65/-90	+65/-90	+65/-90	+65/-90	+65/-75	
32"	31-1/4"	26-1/2"	+65/-90	+65/-90	+65/-90	+65/-90	+65/-90	+65/-90	+65/-75	
36"	35-1/4"	30-1/2"	+65/-90	+65/-90	+65/-90	+65/-90	+65/-90	+65/-90	+65/-75	
40"	39-1/4"	34-1/2"	+65/-90	+65/-90	+65/-90	+65/-90	+65/-90	+65/-90	+65/-75	
42"	41-1/4"	36-1/2"	+65/-90	+65/-90	+65/-90	+65/-90	+65/-90	+65/-90	+65/-75	
48"	47-1/4"	42-1/2"	+65/-90	+65/-90	+65/-90	+65/-90	+65/-90	+65/-90	+65/-75	
54"	53-1/4"	48-1/2"	+65/-90	+65/-90	+65/-90	+65/-90	+65/-90	+65/-90	+65/-75	
56"	55-1/4"	50-1/2"	+65/-75	+65/-75	+65/-75	+65/-75	+65/-75	+65/-75	+65/-75	
60"	59-1/4"	54-1/2"	+65/-75	+65/-75	+65/-75	+65/-75	+65/-75	+65/-75	+65/-75	
64"	63-1/4"	58-1/2"	+65/-75	+65/-75	+65/-75	+65/-75	+65/-75	+65/-75	+65/-75	
66"	65-1/4"	60-1/2"	+65/-75	+65/-75	+65/-75	+65/-75	+65/-75	+65/-75	+65/-75	
72"	71-1/4"	66-1/2"	+65/-75	+65/-75	+65/-75	+65/-75	+65/-75	+65/-75	+65/-75	

GLAZING TYPE A

5/16" LAMINATED, LMI
FOR USE AT ANY HEIGHT ABOVE GRADE

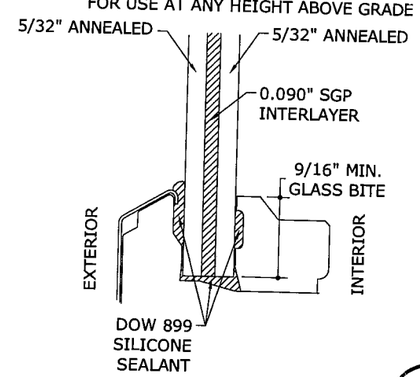

GLAZING TYPE B

1" INSULATED LAMINATED, LMI
FOR USE AT ANY HEIGHT ABOVE GRADE

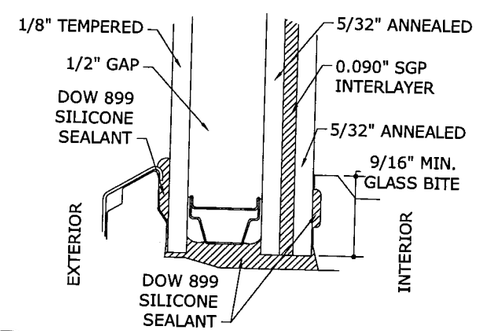

GLAZING TYPE C

1" INSULATED LAMINATED, LMI
NOT FOR USE ABOVE 30' ABOVE GRADE

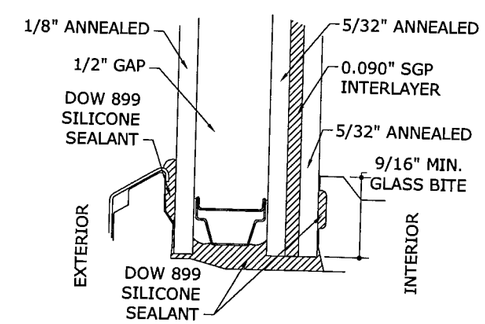

2/1 GLAZING DETAILS

N.T.S. VERT SECTION

GENERAL NOTES

1. THE SYSTEM DESCRIBED HEREIN HAS BEEN DESIGNED AND TESTED IN ACCORDANCE WITH THE 2004 FLORIDA BUILDING CODE WITH 2006 SUPPLEMENTS, FOR USE WITHIN AND OUTSIDE THE HIGH VELOCITY HURRICANE ZONE, PER TAS 201 / 202 / 203 & ASTM E1300-02 STANDARDS.
2. NO 33-1/3% INCREASE IN ALLOWABLE STRESS HAS BEEN USED IN THE DESIGN OF THIS SYSTEM. WIND LOAD DURATION FACTOR Cd=1.6 HAS BEEN USED FOR WOOD ANCHOR DESIGN.
3. POSITIVE AND NEGATIVE DESIGN PRESSURES CALCULATED FOR USE WITH THIS SYSTEM SHALL BE DETERMINED BY OTHERS ON A JOB-SPECIFIC BASIS IN ACCORDANCE WITH THE GOVERNING CODE.
4. THE SYSTEM DETAILED HEREIN IS GENERIC AND DOES NOT PROVIDE INFORMATION FOR A SPECIFIC SITE. FOR SITE CONDITIONS DIFFERENT FROM THE CONDITIONS DETAILED HEREIN, A LICENSED ENGINEER OR REGISTERED ARCHITECT SHALL PREPARE SITE SPECIFIC DOCUMENTS FOR USE IN CONJUNCTION WITH THIS DOCUMENT.
5. PERMIT HOLDER SHALL VERIFY THE ADEQUACY OF THE EXISTING STRUCTURE TO WITHSTAND SUPERIMPOSED LOADS. WOOD BUCKS (BY OTHERS) SHALL BE ANCHORED PROPERLY TO TRANSFER LOADS TO THE EXISTING STRUCTURE.
6. ALL WOOD COMPONENTS OF THIS PRODUCT SHALL BE PRESSURE TREATED WESTERN PINE OR WESTERN WOODS WITH G=0.36 OR GREATER DENSITY, UNLESS NOTED OTHERWISE.
7. UNITS GLAZED WITH 5/16" LAMINATED GLASS (5/32" ANNEALED / 0.090" SGP INTERLAYER / 5/32" ANNEALED, LAMINATED BY CARDINAL) ARE IMPACT RESISTANT AND DO NOT REQUIRE IMPACT RESISTANT SHUTTERS.
8. UNITS GLAZED WITH 1" INSULATED LAMINATED GLASS (1/8" TEMPERED + 1/2" GAP + 5/32" ANNEALED / 0.090" SGP INTERLAYER / 5/32" ANNEALED, LAMINATED BY CARDINAL) ARE LARGE MISSILE IMPACT RESISTANT AND DO NOT REQUIRE IMPACT RESISTANT SHUTTERS.
9. UNITS GLAZED WITH 1" INSULATED LAMINATED GLASS (1/8" ANNEALED + 1/2" GAP + 5/32" ANNEALED / 0.090" SGP INTERLAYER / 5/32" ANNEALED, LAMINATED BY CARDINAL) ARE LARGE MISSILE IMPACT RESISTANT AND DO NOT REQUIRE IMPACT RESISTANT SHUTTERS.
10. PLASTIC COMPONENTS USED WITHIN THE HVHZ MUST MEET ALL APPLICABLE FIRE/SMOKE/UV PERFORMANCE REQUIREMENTS AS SET FORTH IN THE ABOVE-NOTED BUILDING CODE.
11. ALL STEEL IN CONTACT WITH ALUMINUM SHALL BE PAINTED OR PLATED AS PRESCRIBED IN THE ABOVE-NOTED BUILDING CODE.

Approved as complying with the Florida Building Code
Date 11/13/2008
NOA# 07-1218.07
Miami Dade Product Control Division
By

FRANK L. BENNARDO, P.E.
PE0046549
10/07/2008

ENGINEERING EXPRESS®
160 SW 12th AVENUE, #106
DEERFIELD BEACH, FL 33442
PH: (954) 354-0660 FAX: (954) 354-0443
WWW.ENGEXP.COM
CERT OF AUTH #9885
A FRANK L. BENNARDO, P.E., INC. INNOVATION

JELD-WEN
3737 LAKEPORT BOULEVARD
KLAMATH FALLS, OREGON 97601
PHONE: (541) 850 - 2606

CUSTOM COLLECTION OPERABLE CASEMENT WINDOW
LARGE MISSILE IMPACT RESISTANT
MIAMI-DADE NOTICE OF ACCEPTANCE

REMARKS	DRWN	CHKD	DATE
INIT ISSUE	KL	CL	10/17/07
REV. PER BCCO COMMENT	KL	CL	09/03/08
REV. ANCHOR PER COMMENT	KL	CL	10/07/08

07-JWN-0004

SCALE: - 01

PAGE DESCRIPTION:

1 / 7

10/07/2008 - 2:37pm keithl F:\01 Project Files\Jeld-Wen (JWN)\2007\07-JWN-0004 Custom Wood - Clad Casement, Operable, LMI (NOA)\07-JWN-0004_01g Custom Wood - Clad Casement, Operable, LMI (NOA).dwg

FRANK L. BENNARDO, P.E.
PE0046549

10/07/2008

ENGINEERING EXPRESS®
160 SW 12th AVENUE, #106
DEERFIELD BEACH, FL 33442
PH: (954) 354-0660 FAX: (954) 354-0443
WWW.ENGEXP.COM
CERT OF AUTH #9885
A FRANK L. BENNARDO, P.E., INC. INNOVATION

A/2 TYPICAL HEAD ASSEMBLY

N.T.S. VERT SECTION

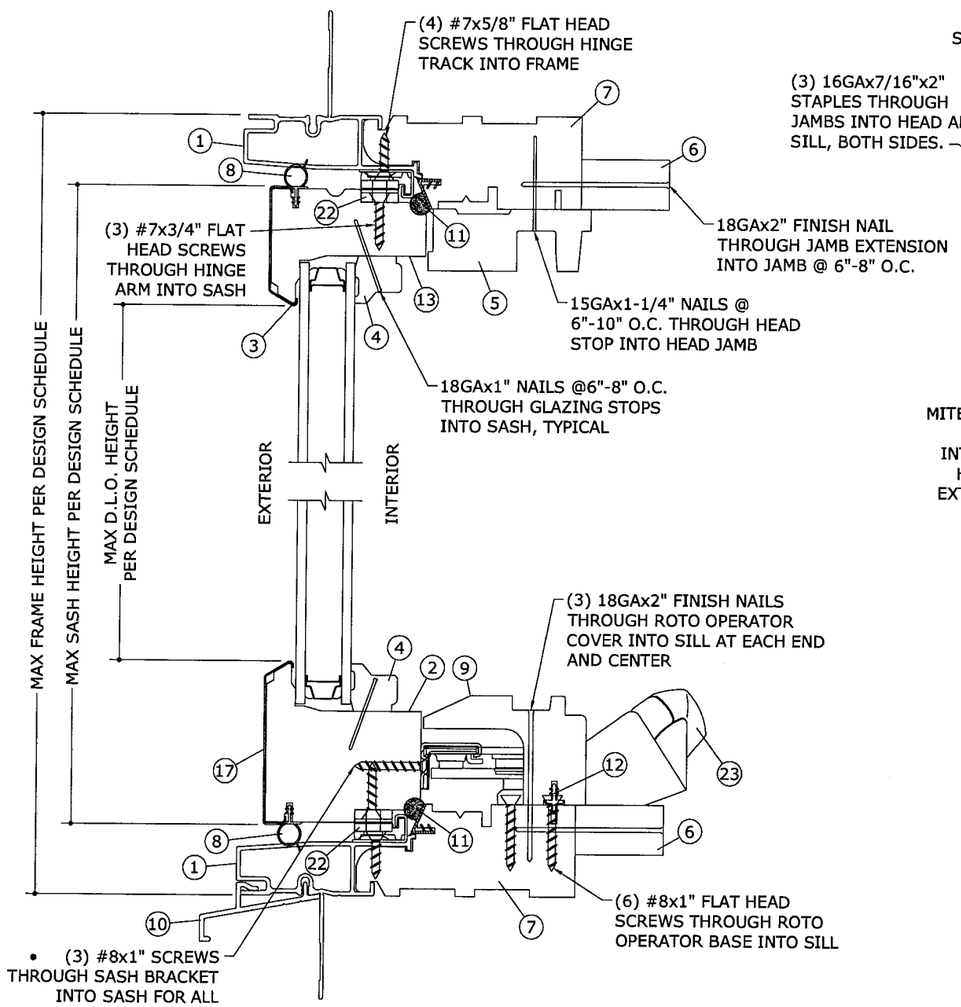

B/2 TYPICAL SILL ASSEMBLY

N.T.S. VERT SECTION

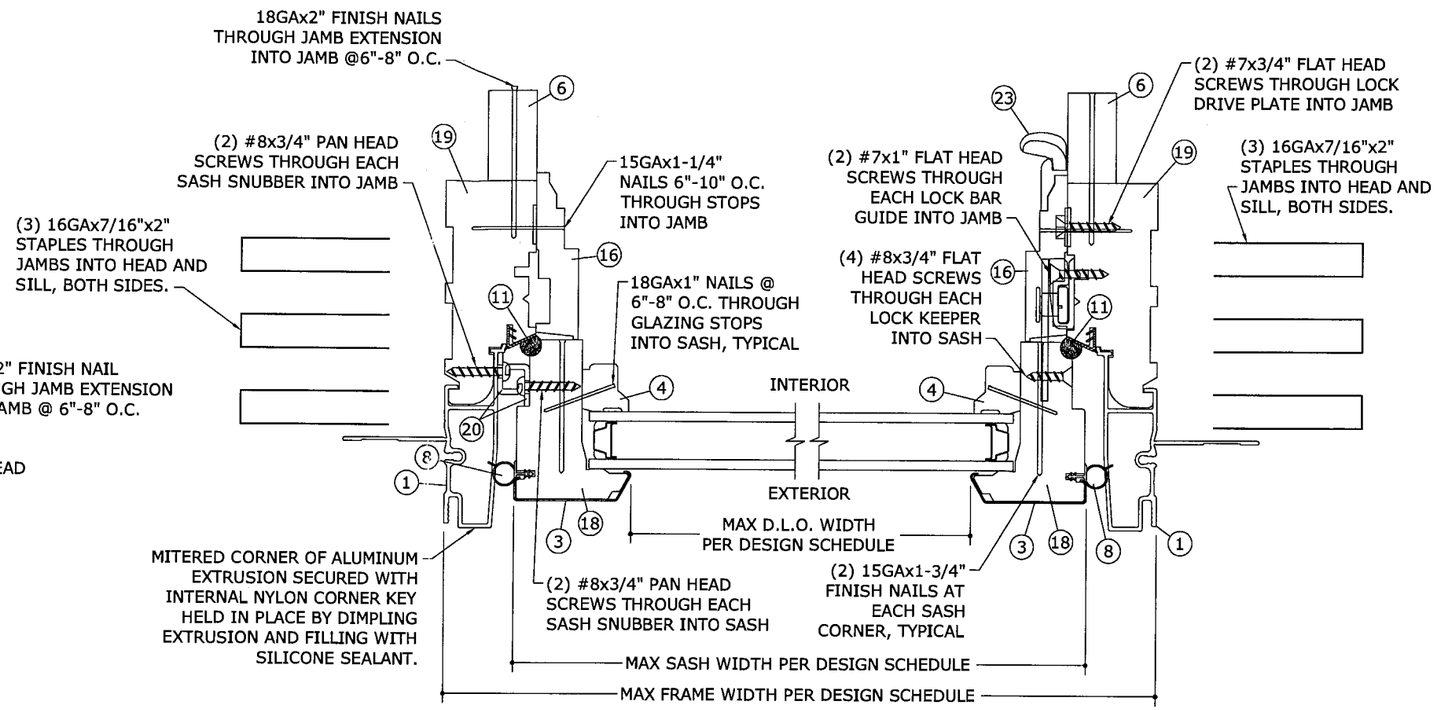

C/2 TYPICAL JAMB ASSEMBLY AT HINGE

N.T.S. HORIZ SECTION

D/2 TYPICAL JAMB ASSEMBLY AT LOCK

N.T.S. HORIZ SECTION

Approved as complying with the Florida Building Code
Date 11/13/2008
NOA# 07-1218.07
Miami Dade Product Control Division
By

JELD-WEN
3737 LAKEPORT BOULEVARD
KLAMATH FALLS, OREGON 97601
PHONE: (541) 850 - 2606

CUSTOM COLLECTION OPERABLE CASEMENT WINDOW
LARGE MISSILE IMPACT RESISTANT
MIAMI-DADE NOTICE OF ACCEPTANCE

REMARKS	DRWN	CHKD	DATE
INIT ISSUE	KL	CL	10/17/07
REV. PER BCCO COMMENT	KL	CL	09/03/08
REV. ANCHOR PER COMMENT	KL	CL	10/07/08
-	-	-	-
-	-	-	-

07-JWN-0004
SCALE: - 01
PAGE DESCRIPTION:
-
-

7

2

10/07/2008 - 2:37pm keithl F:\01 Project Files\Jeld-Wen (JWN)\2007\07-JWN-0004 Custom Wood - Clad Casement, Operable, LMI (NOA)\07-JWN-0004_01g Custom Wood - Clad Casement, Operable, LMI (NOA).dwg

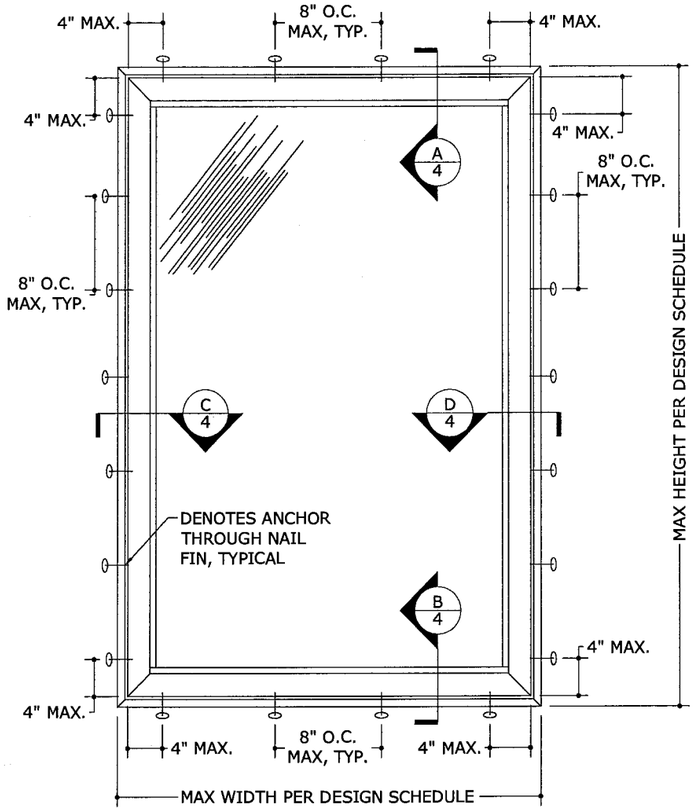

1/3 ANCHOR ELEVATION FOR INSTALLATION WITH NAIL FIN

N.T.S. EXTERIOR ELEV

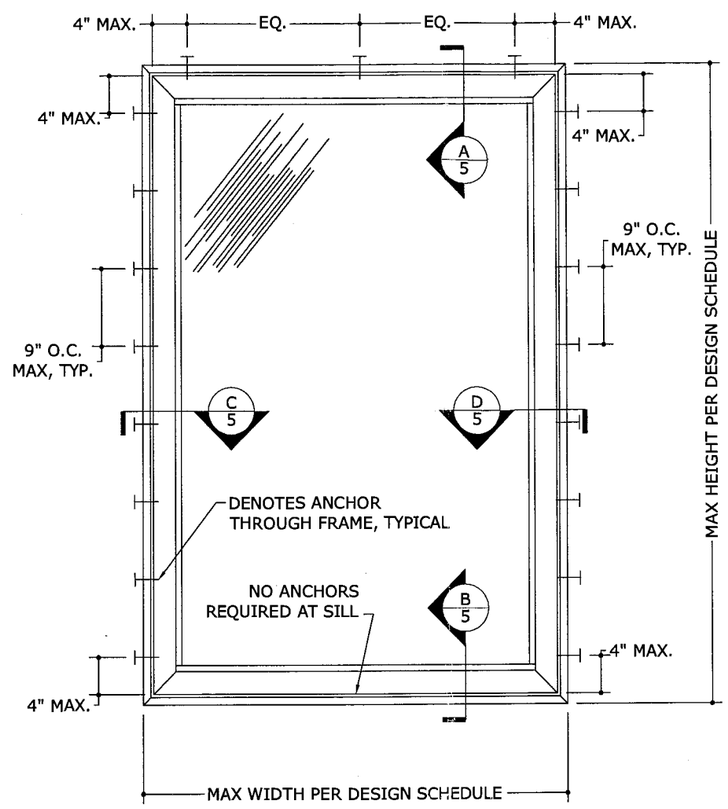

2/3 ANCHOR ELEVATION FOR INSTALLATION THROUGH FRAME

N.T.S. EXTERIOR ELEV

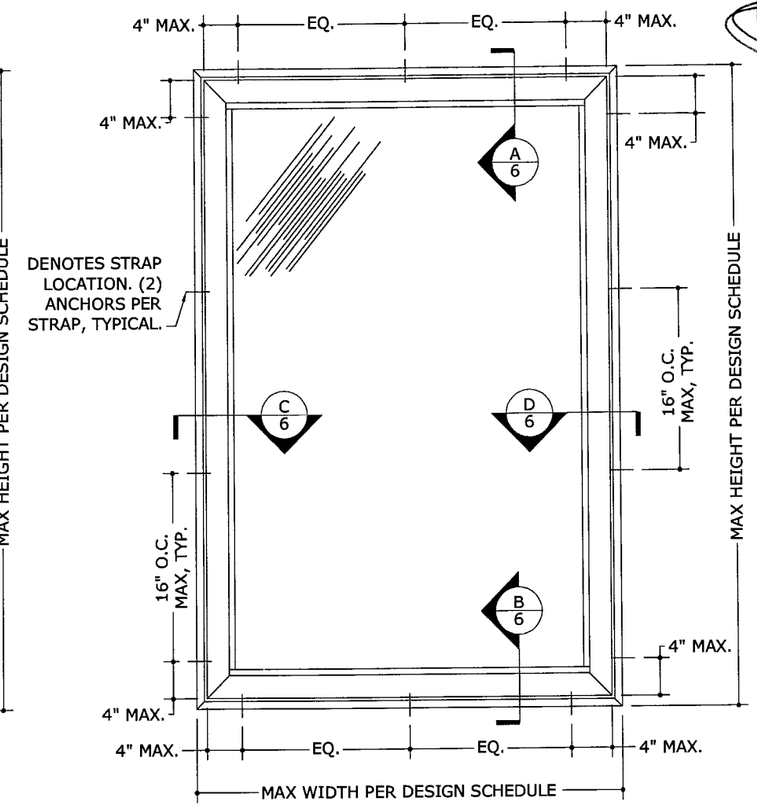

3/3 ANCHOR ELEVATION FOR INSTALLATION WITH STRAP

N.T.S. EXTERIOR ELEV

ANCHOR SCHEDULE:

TO HOLLOW BLOCK OR 3192 PSI MIN CONCRETE HOST STRUCTURE:

- 1/4" TAPCONS (ELCO OR ITW) THRU 1X OR 2X WOOD BUCKS OR DIRECTLY INTO MASONRY / CONCRETE WITH 1-3/4" MIN. EMBEDMENT.

TO WOOD BUCK OR HOST STRUCTURE (G=0.55 MIN WOOD):

- 1/4" TAPCONS (ELCO OR ITW) WITH 1-1/2" MIN. THREAD PENETRATION.
- #14 WOOD SCREWS WITH 1-1/2" MIN. THREAD PENETRATION.
- 1/4" LAG SCREWS WITH 1-1/2" MIN. THREAD PENETRATION.

ANCHOR NOTES:

1. SEE ANCHOR ELEVATIONS FOR ANCHOR LOCATIONS AND/OR SPACING.
2. ANCHORS SHALL BE INSTALLED IN ACCORDANCE WITH MANUFACTURERS' RECOMMENDATIONS.
3. TAPCONS MAY BE MANUFACTURED BY ELCO OR ITW.
4. ENSURE MINIMUM 2-1/2" EDGE DISTANCE FOR ALL ANCHORS INTO CONCRETE AND INTO HOLLOW BLOCK.
5. WHERE ANCHORS FASTEN TO NARROW FACE OF STUD FRAMING, ANCHOR SHALL BE LOCATED IN CENTER OF NOMINAL 2x (MIN) WOOD STUD (i.e. 3/4" EDGE DISTANCE IS ACCEPTABLE FOR ANCHORS TO WOOD FRAMING).
6. WOOD HOST STRUCTURE SHALL BE "SOUTHERN PINE" G=0.55 OR GREATER DENSITY.
7. MINIMUM EMBEDMENT SHALL BE AS NOTED IN ANCHOR SCHEDULE. MINIMUM EMBEDMENT AND EDGE DISTANCE EXCLUDES STUCCO, FOAM, BRICK, AND OTHER WALL FINISHES.
8. ANCHOR SCHEDULE APPLIES TO ALL PRODUCTS CERTIFIED HEREIN.
9. WHERE EXISTING STRUCTURE IS WOOD FRAMING, EXISTING CONDITIONS MAY VARY. FIELD VERIFY THAT FASTENERS ARE INTO ADEQUATE WOOD FRAMING MEMBERS, NOT INTO PLYWOOD.
11. WOOD BUCKS (BY OTHERS) SHALL BE ANCHORED PROPERLY TO TRANSFER LOADS TO THE EXISTING STRUCTURE.

Approved as complying with the Florida Building Code
Date 11/13/2008
NOA# 07-1218.07
Miami-Dade Product Control Division
By

FRANK L. BENNARDO, P.E.
PE0046549
10/07/2008

ENGINEERING EXPRESS®
160 SW 12th AVENUE, #106
DEERFIELD BEACH, FL 33442
PH: (954) 354-0660 FAX: (954) 354-0443
WWW.ENGEXP.COM
CERT OF AUTH #9885
A. FRANK L. BENNARDO, P.E., INC. INNOVATION

JELD-WEN
3737 LAKEPORT BOULEVARD
KLAMATH FALLS, OREGON 97601
PHONE: (541) 850 - 2606

CUSTOM COLLECTION OPERABLE CASEMENT WINDOW
LARGE MISSILE IMPACT RESISTANT
MIAMI-DADE NOTICE OF ACCEPTANCE

REMARKS	DRWN	CHKD	DATE
INIT. ISSUE	KL	CL	10/17/07
REV. PER BCCO COMMENT	KL	CL	09/03/08
REV. ANCHOR PER COMMENT	KL	CL	10/07/08
-	-	-	-
-	-	-	-

07-JWN-0004

SCALE: - 01

PAGE DESCRIPTION:
-
-

7

3

10/07/2008 - 2:38pm keithl F:\01 Project Files\Jeld-Wen (JWN)\2007\07-JWN-0004 Custom Wood - Clad Casement, Operable, LMI (NOA)\07-JWN-0004_01g Custom Wood - Clad Casement, Operable, LMI (NOA).dwg

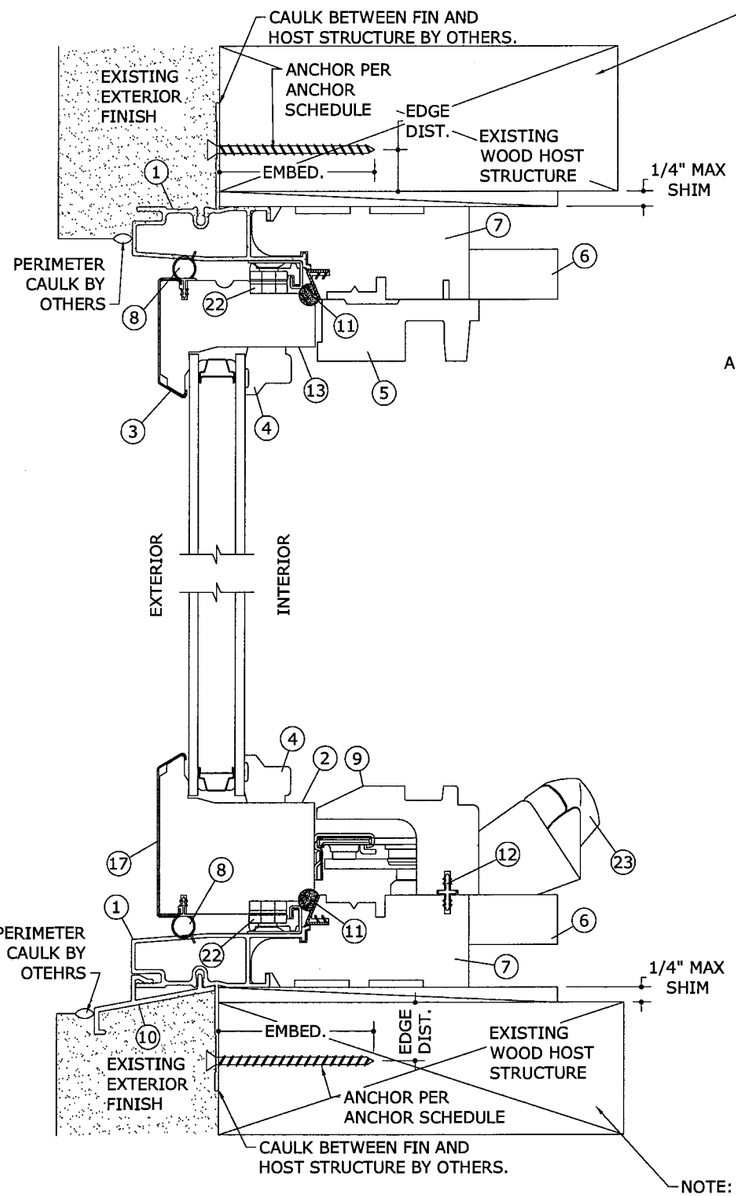

A 4 INSTALLATION WITH FIN AT FRAME HEAD
N.T.S. VERT SECTION

B 4 INSTALLATION WITH FIN AT FRAME SILL
N.T.S. VERT SECTION

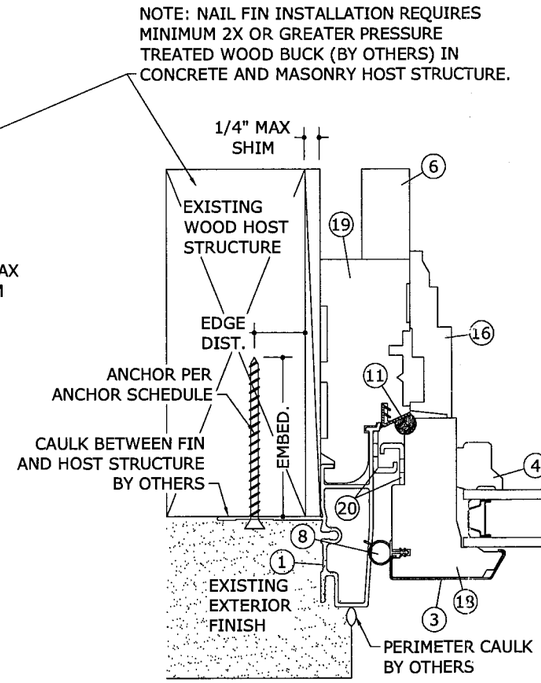

C 4 INSTALLATION WITH FIN AT FRAME JAMB
N.T.S. HORIZ SECTION

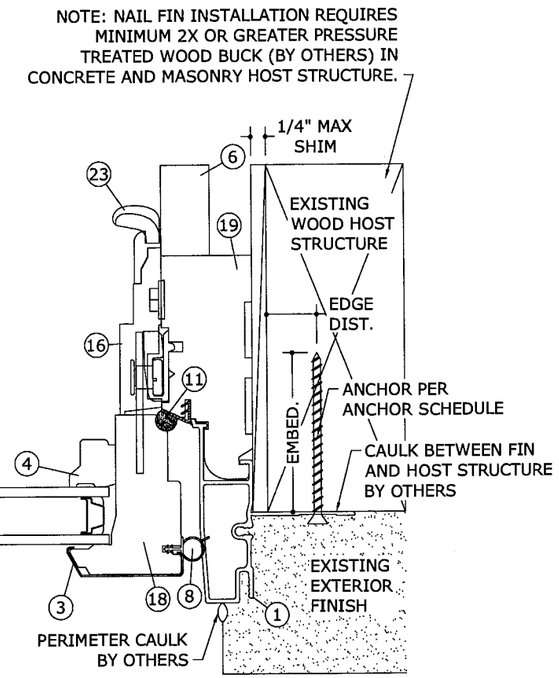

D 2 INSTALLATION WITH FIN AT FRAME JAMB
N.T.S. HORIZ SECTION

NOTE: SEE ANCHOR SCHEDULE AND ANCHOR NOTES FOR REQUIRED EDGE DISTANCES AND EMBEDMENTS.

NOTE: NAIL FIN INSTALLATION REQUIRES MINIMUM 2X OR GREATER PRESSURE TREATED WOOD BUCK (BY OTHERS) IN CONCRETE AND MASONRY HOST STRUCTURE.

Approved as complying with the Florida Building Code
Date 11/13/2008
NOA# 07-1218.07
Miami Dade Product Control Division
By

FRANK L. BENNARDO, P.E.
PE0046549
10/07/2008

ENGINEERING EXPRESS®
160 SW 12th AVENUE, #106
DEERFIELD BEACH, FL 33442
PH: (954) 354-0660 FAX: (954) 354-0443
WWW.ENGEXP.COM
CERT OF AUTH #9885
A FRANK L. BENNARDO, P.E., INC. INNOVATION

JELD-WEN
3737 LAKEPORT BOULEVARD
KLAMATH FALLS, OREGON 97601
PHONE: (541) 850 - 2606

CUSTOM COLLECTION OPERABLE CASEMENT WINDOW
LARGE MISSILE IMPACT RESISTANT
MIAMI-DADE NOTICE OF ACCEPTANCE

REMARKS	DRWN	CHKD	DATE
INIT ISSUE	KL	CL	10/17/07
REV. PER BCCO COMMENT	KL	CL	09/03/08
REV. ANCHOR PER COMMENT	KL	CL	10/07/08
-	-	-	-
-	-	-	-

07-JWN-0004
SCALE: - 01
PAGE DESCRIPTION:
-
-

7

4

F:\01 Project Files\Jeld-Wen (JWN)\2007\07-JWN-0004 Custom Wood - Clad Casement, Operable, LMI (NOA)\07-JWN-0004_01g Custom Wood - Clad Casement, Operable, LMI (NOA).dwg
10/07/2008 - 2:38pm keithl

A/5 INSTALLATION THROUGH FRAME HEAD

N.T.S. VERT SECTION

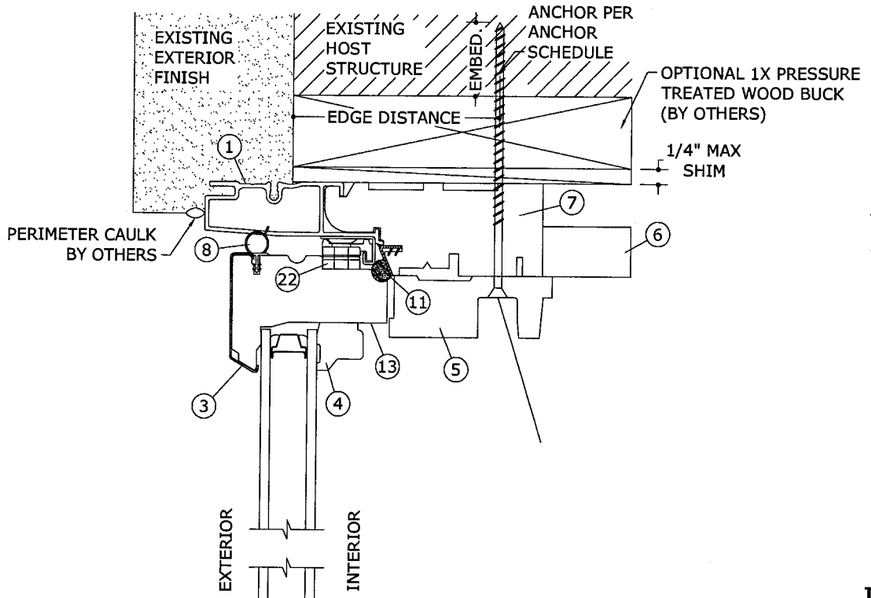

C/5 INSTALLATION THROUGH FRAME JAMB

N.T.S. HORIZ SECTION

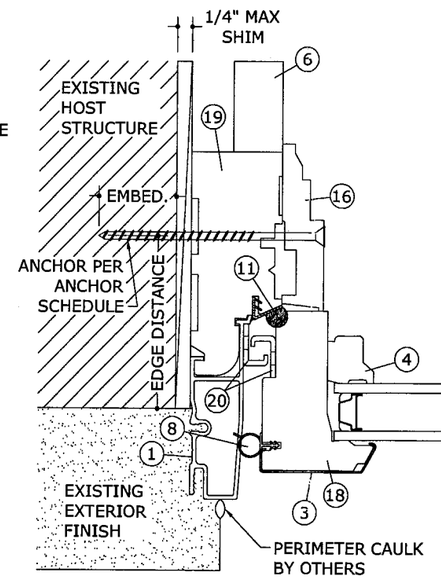

D/5 INSTALLATION THROUGH FRAME JAMB

N.T.S. HORIZ SECTION

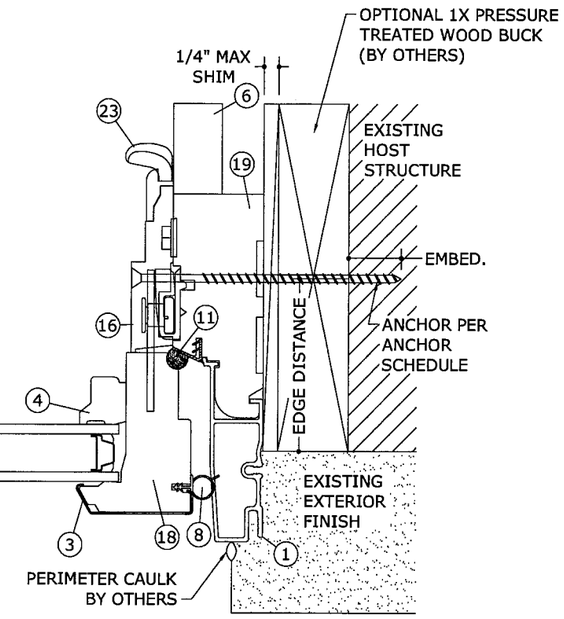

NOTE: SEE ANCHOR SCHEDULE AND ANCHOR NOTES FOR REQUIRED EDGE DISTANCES AND EMBEDMENTS.

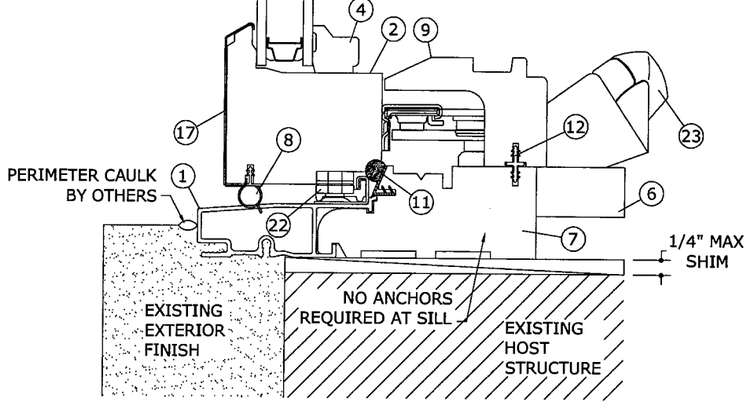

B/5 INSTALLATION THROUGH FRAME SILL

N.T.S. VERT SECTION

Approved as complying with the Florida Building Code
Date 11/13/2008
NOA# 07-1218.07
Miami Dade Product Control Division
By

FRANK L. BENNARDO, P.E.
PE0046549
10/07/2008

ENGINEERING EXPRESS®
160 SW 12th AVENUE, #106
DEERFIELD BEACH, FL 33442
Ph: (954) 354-0660 Fax: (954) 354-0443
WWW.ENGEXP.COM
CERT OF AUTH #9885
A. FRANK L. BENNARDO, P.E., INC. INNOVATION

JELD-WEN
3737 LAKEPORT BOULEVARD
KLAMATH FALLS, OREGON 97601
PHONE: (541) 850 - 2606

CUSTOM COLLECTION OPERABLE CASEMENT WINDOW
LARGE MISSILE IMPACT RESISTANT
MIAMI-DADE NOTICE OF ACCEPTANCE

REMARKS	DRWN	CHKD	DATE
INIT ISSUE	KL	CL	10/17/07
REV. PER BCCO COMMENT	KL	CL	09/03/08
REV. ANCHOR PER COMMENT	KL	CL	10/07/08
-	-	-	-
-	-	-	-

07-JWN-0004

SCALE: - 01

PAGE DESCRIPTION:
-
-

7

5

F:\01 Project Files\Jeld-Wen (JWN)\2007\07-JWN-0004 Custom Wood - Clad Casement, Operable, LMI (NOA)\07-JWN-0004_01g Custom Wood - Clad Casement, Operable, LMI (NOA).dwg
10/07/2008 - 2:38pm keithl

F:\01 Project Files\Jeld-Wen (JWN)\2007\07-JWN-0004 Custom Wood - Clad Casement, Operable, LMI (NOA)\07-JWN-0004_01g Custom Wood - Clad Casement, Operable, LMI (NOA).dwg
10/07/2008 - 2:38pm keithl

A/6 INSTALLATION WITH STRAP AT FRAME HEAD

N.T.S. VERT SECTION

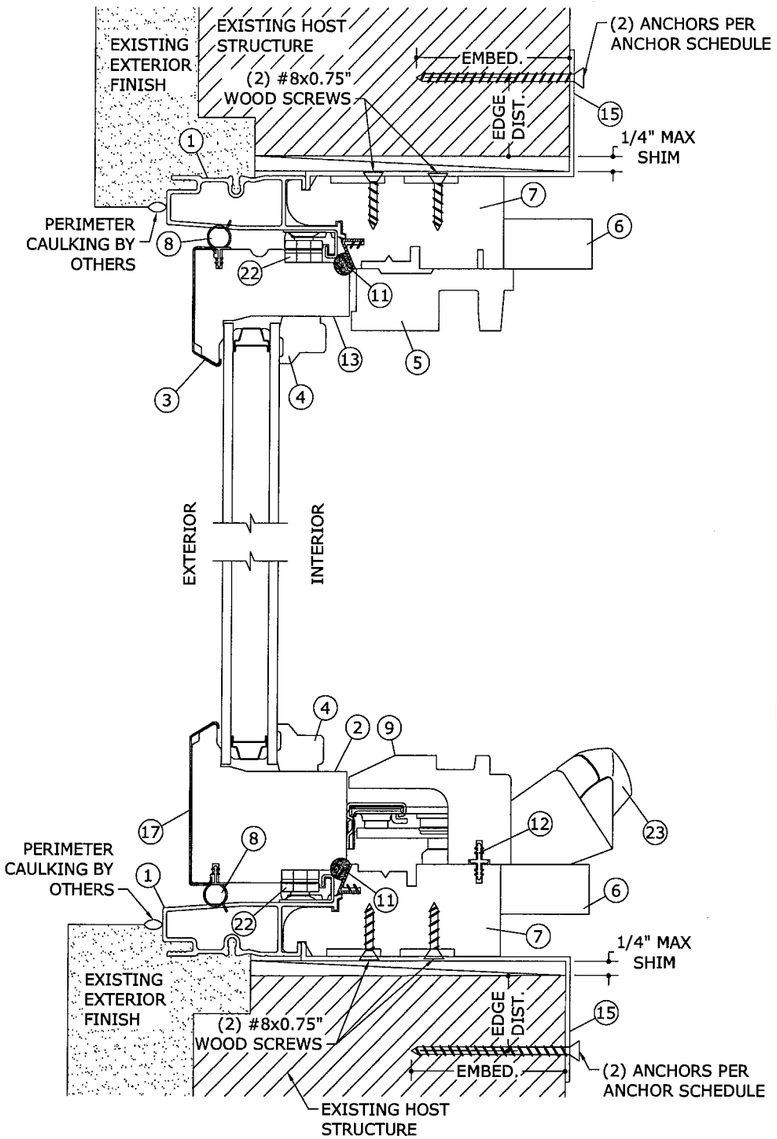

B/6 INSTALLATION WITH STRAP AT FRAME SILL

N.T.S. VERT SECTION

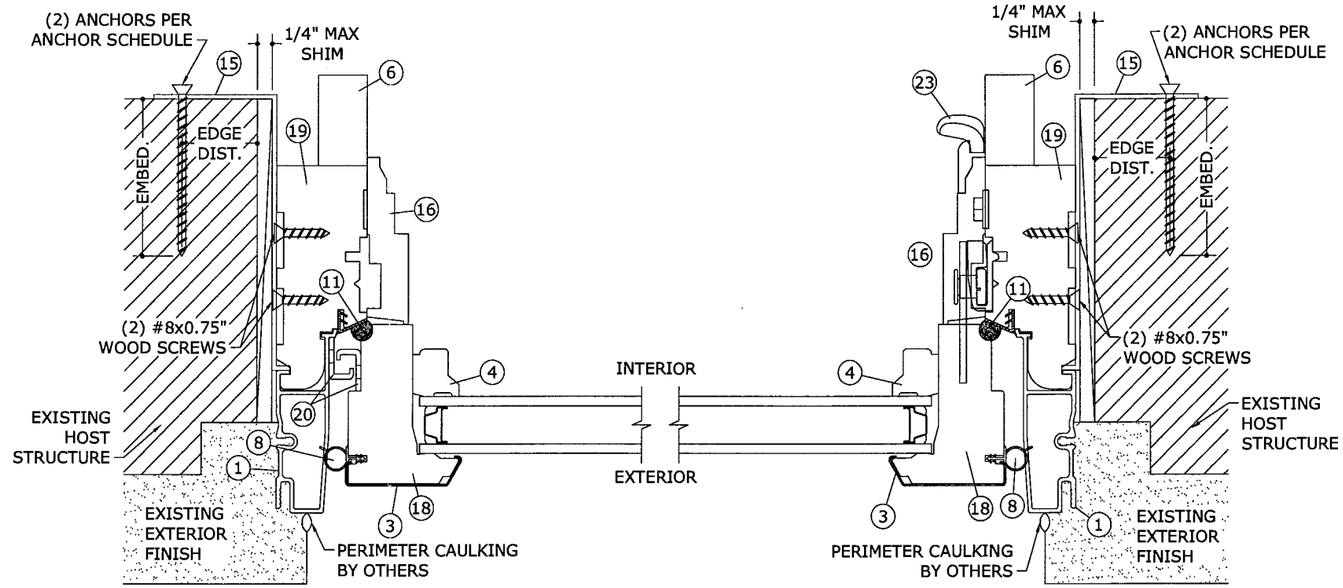

C/6 INSTALLATION WITH STRAP AT FRAME JAMB

N.T.S. HORIZ SECTION

D/6 INSTALLATION WITH STRAP AT FRAME JAMB

N.T.S. HORIZ SECTION

NOTE: SEE ANCHOR SCHEDULE AND ANCHOR NOTES FOR REQUIRED EDGE DISTANCES AND EMBEDMENTS.

Approved as complying with the Florida Building Code
Date 11/13/2008
NOA# 07-1218.07
Miami Dade Product Control Division
By

FRANK L. BENNARDO, P.E.
PE0046549
10/07/2008

ENGINEERING EXPRESS®
160 SW 12th AVENUE, #106
DEERFIELD BEACH, FL 33442
Ph: (954) 354-0660 Fax: (954) 354-0443
WWW.ENGEXP.COM
CERT OF AUTH #9865
A FRANK L. BENNARDO, P.E., INC. INNOVATION

JELD-WEN
3737 LAKEPORT BOULEVARD
KLAMATH FALLS, OREGON 97601
PHONE: (541) 850 - 2606

CUSTOM COLLECTION OPERABLE CASEMENT WINDOW
LARGE MISSILE IMPACT RESISTANT
MIAMI-DADE NOTICE OF ACCEPTANCE

REMARKS	DRWN	CHKD	DATE
INIT ISSUE	KL	CL	10/17/07
REV. PER BCCO COMMENT	KL	CL	09/03/08
REV. ANCHOR PER COMMENT	KL	CL	10/07/08
-	-	-	-
-	-	-	-

07-JWN-0004

SCALE: - 01

PAGE DESCRIPTION:
-
-

7

6

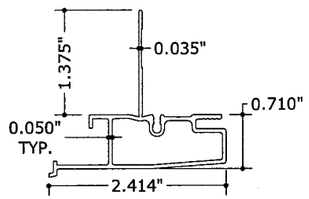

1 NAIL FIN
6" = 1'-0" 6063-T5 ALUM.

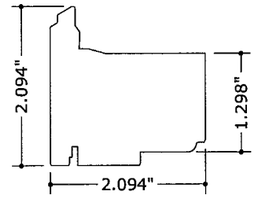

2 SASH BOTTOM RAIL
6" = 1'-0" WOOD

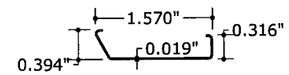

3 STILE AND TOP RAIL CLADDING
6" = 1'-0" 3105-H15 ALUM.

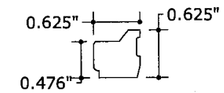

4 GLAZING STOP
6" = 1'-0" WOOD

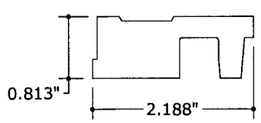

5 HEAD STOP
6" = 1'-0" WOOD

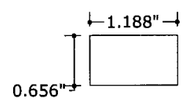

6 JAMB EXTENDER
6" = 1'-0" WOOD

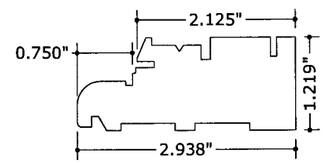

7 FRAME HEAD AND SILL
6" = 1'-0" WOOD

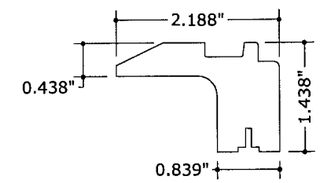

9 OPERATOR COVER
6" = 1'-0" WOOD

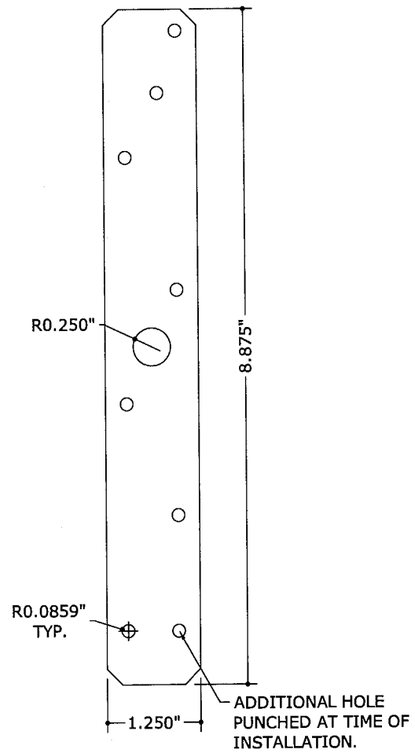

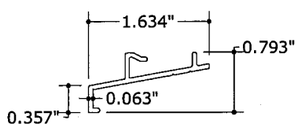

10 EXTRUDED SILL NOSE
6" = 1'-0" 6063-T5 ALUM.

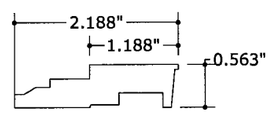

16 SIDE STOP
6" = 1'-0" WOOD

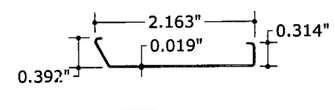

17 BOTTOM RAIL CLADDING
6" = 1'-0" 3105-H15 ALUM.

15 13GA GALVANIZED INSTALLATION STRAP
6" = 1'-0" STEEL

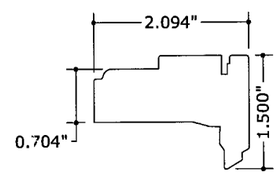

18 SASH STILE
6" = 1'-0" WOOD

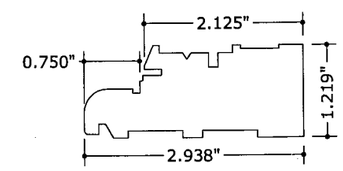

19 FRAME JAMB
6" = 1'-0" WOOD

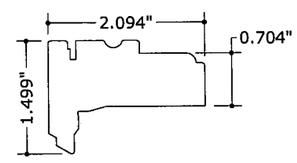

13 SASH TOP RAIL
6" = 1'-0" WOOD

BILL OF MATERIALS

ITEM	PART #	DESCRIPTION	MATERIAL	REMARKS
1	VH-53638	EXTRUDED FRAME CLADDING	6063-T5	
2	CA0148RA	SASH BOTTOM RAIL	WOOD	PRESSURE TREATED AURALAST®
3	1A16047-01	STILE AND TOP RAIL CLADDING	3105-H15	ROLL FORMED
4	CA0278SP	GLAZING STOP	WOOD	PRESSURE TREATED AURALAST®
5	CA0282SP	HEAD STOP	WOOD	PRESSURE TREATED AURALAST®
6	CA260AJE	JAMB EXTENDER	WOOD	PRESSURE TREATED AURALAST®
7	CA0151HJ	FRAME SILL & HEAD	WOOD	PRESSURE TREATED AURALAST®
8	50468A	SASH WEATHERSTRIP	PVC	BY INTEK
9	CA01420C	OPERATOR COVER	WOOD	PRESSURE TREATED AURALAST®
10	VS-53646	EXTRUDED SILL NOSE	6063-T5	
11	12261	FRAME WEATHERSTRIP	PVC	BY AMESBURY
12	30263B	OPERATOR COVER FASTENING STRIP	PVC	BY INTEK
13	CA0147RA	SASH TOP RAIL	WOOD	PRESSURE TREATED AURALAST®
14	MAXIM	ROTO OPERATING HARDWARE	STEEL	BY TRUTH
15		GALVANIZED INSTALLATION STRAP	STEEL	13 GA
16	CA0274SP	SIDE STOP	WOOD	PRESSURE TREATED AURALAST®
17	1A15047-04	BOTTOM RAIL CLADDING	3105-H15	ROLL FORMED
18	CA0157ST	SASH STILE	WOOD	PRESSURE TREATED AURALAST®
19	CA0174SJ	FRAME JAMB	WOOD	PRESSURE TREATED AURALAST®
20	21642.92	SNUBBERS	STEEL	BY TRUTH
21		SILICONE SEALANT	SILICONE	DOW CORNING 899
22		HINGE	SS	
23		LOCK SYSTEM		BY ASHLAND HARDWARE SYSTEMS

Approved as complying with the Florida Building Code
Date 11/13/2008
NOA# 07-1218.07
Miami Dade Product Control Division
By

FRANK L. BENNARDO, P.E.
PE0046549
10/07/2008

ENGINEERING EXPRESS®
160 SW 12th AVENUE, #106
DEERFIELD BEACH, FL 33442
PH: (954) 354-0660 FAX: (954) 354-0443
WWW.ENGEXP.COM
CERT OF AUTH #9885
A. FRANK L. BENNARDO, P.E., INC. INNOVATION

JELD-WEN
3737 LAKEPORT BOULEVARD
KLAMATH FALLS, OREGON 97601
PHONE: (541) 850 - 2606

CUSTOM COLLECTION OPERABLE CASEMENT WINDOW
LARGE MISSILE IMPACT RESISTANT
MIAMI-DADE NOTICE OF ACCEPTANCE

REMARKS	DRWN	CHKD	DATE
INIT ISSUE	KL	CL	10/17/07
REV. PER BCCO COMMENT	KL	CL	09/03/08
REV. ANCHOR PER COMMENT	KL	CL	10/07/08
-	-	-	-
-	-	-	-

07-JWN-0004
SCALE: - 01
PAGE DESCRIPTION:
-
-

F:\01 Project Files\Jeld-Wen (JWN)\2007\07-JWN-0004 Custom Wood - Clad Casement, Operable, LMI (NOA)\07-JWN-0004_01g Custom Wood - Clad Casement, Operable, LMI (NOA).dwg
10/07/2008 - 2:38pm keithl