MIAMI-DADE COUNTY
BUILDING CODE COMPLIANCE OFFICE (BCCO)
PRODUCT CONTROL DIVISION

MIAMI-DADE COUNTY, FLORIDA
METRO-DADE FLAGLER BUILDING
140 WEST FLAGLER STREET, SUITE 1603
MIAMI, FLORIDA 33130-1563
(305) 375-2901 FAX (305) 375-2908
www.buildingcodeonline.com

# NOTICE OF ACCEPTANCE (NOA)

**Sargent & Greenleaf, Inc.**
**One Security Drive**
**Nicholasville, KY 40356**

**SCOPE:**

This NOA is being issued under the applicable rules and regulations governing the use of construction materials. The documentation submitted has been reviewed by the BCCO and accepted by the Building Code and Product Review Committee (BCPRC) to be used in Miami Dade County and other areas where allowed by the Authority Having Jurisdiction (AHJ).

This NOA shall not be valid after the expiration date stated below. The BCCO (In Miami Dade County) and/or the AHJ (in areas other than Miami Dade County) reserve the right to have this product or material tested for quality assurance purposes. If this product or material fails to perform in the accepted manner, the manufacturer will incur the expense of such testing and the AHJ may immediately revoke, modify, or suspend the use of such product or material within their jurisdiction. BCPRC reserves the right to revoke this acceptance, if it is determined by BCCO that this product or material fails to meet the requirements of the applicable building code.

This product is approved as described herein, and has been designed to comply with the Florida Building Code, including the High Velocity Hurricane Zone.

**DESCRIPTION: Series "ARM-A-DOR" Panic Exit Device-Component Approval**

**APPROVAL DOCUMENT:** Drawing No. **A100-INS**, Sheets 1 through 2 of 2, titled "ARM-A-DOR Panic Device," prepared by manufacturer, dated 03/09/99 and last revised on Jan 11, 2008, signed and sealed by Warren W. Schaefer, P.E., bearing the Miami-Dade County Product Control Renewal stamp with the Notice of Acceptance number and expiration date by the Miami-Dade County Product Control Division.

**MISSILE IMPACT RATING: Large and Small Missile Impact**

**Limitation:** Max Design Pressure = +/- **85 PSF**, Single Steel Door (48" x 86" max panel) application
Electrical installation under separate approval, to be reviewed by appropriate Bldg. official.

**LABELING:** Each unit shall bear a permanent label with the manufacturer's name or logo, city, state and following statement: "Miami-Dade County Product Control Approved", unless otherwise noted herein.

**RENEWAL** of this NOA shall be considered after a renewal application has been filed and there has been no change in the applicable building code negatively affecting the performance of this product.

**TERMINATION** of this NOA will occur after the expiration date or if there has been a revision or change in the materials, use, and/or manufacture of the product or process. Misuse of this NOA as an endorsement of any product, for sales, advertising or any other purposes shall automatically terminate this NOA. Failure to comply with any section of this NOA shall be cause for termination and removal of NOA.

**ADVERTISEMENT:** The NOA number preceded by the words Miami-Dade County, Florida, and followed by the expiration date may be displayed in advertising literature. If any portion of the NOA is displayed, then it shall be done in its entirety.

**INSPECTION:** A copy of this entire NOA shall be provided to the user by the manufacturer or its distributors and shall be available for inspection at the job site at the request of the Building Official.

This NOA **renews # 07-0618.20** consists of this page 1 and evidence pages E-1 as well as approval document mentioned above.
The submitted documentation was reviewed by **Ishaq I. Chanda, P.E.**

MIAMI-DADE COUNTY APPROVED

**NOA No 07-1219.12**
**Expiration Date: March 09, 2012**
**Approval Date: February 07, 2008**


2/7/18

Sargent & General, Inc

## NOTICE OF ACCEPTANCE: EVIDENCE SUBMITTED

**A. DRAWINGS** (transferred from file # **07-0618.20**)

1. Manufacturer's die drawings and sections.
2. Drawing No. **A100-INS**, Sheets 1 through 2 of 2, titled "ARM-A-DOR Panic Device," prepared by manufacturer, dated 03/09/99 and last revised on Jan 11, 2008, signed & sealed by Warren W. Schaefer, P.E.

**B. TESTS**

1. Test reports on 1) Uniform Static Air Pressure Test, Loading per FBC, TAS 202-94
   2) Water infiltration test per FBC, TAS 202-94 (Not performed)
   2) Large Missile Impact Test per FBC, TAS 201-94
   3) Cyclic Wind Pressure Loading per FBC, TAS 203-94
   4) Forced Entry Test, per FBC 2411.3.2.1 and TAS 202-94

   Along with installation diagrams of a Panic exit devices, prepared by Hurricane Testing Laboratory, Test Report No(s). T116-0601-07, dated 06/27/07, signed and sealed by Vinu J. Abraham, P.E.
2. Test reports : Tests conducted under SFBC protocols PA 201, 202 &202-94, now termed as FBC, TAS 201, 202, 203-94
   1) Uniform Static Air Pressure Test, Loading per FBC, TAS 202-94
   2) Large Missile Impact Test per FBC, TAS 201-94
   3) Cyclic Wind Pressure Loading per FBC, TAS 203-94
   4) Forced Entry Test, per FBC 2411.3.2.1 and TAS 202-94

   Along with installation diagrams of a Panic exit devices, prepared by Hurricane Testing Laboratory, Test Report No(s).**HTL 96097(HTL-0116-1205-96)**, dated 12/10/96, signed and sealed by Timothy S. Marshall, P.E.

**C. CALCULATIONS:** (transferred from file # **07-0618.20**)

1. Structural calculation of door components performed by W .W. Schaefer Engineering & Consulting, P.A., dated 1/27/97, signed and sealed by Warren W. Schaefer, P.E.

**D. QUALITY ASSURANCE**

1. Miami Dade Building Code Compliance Office (BCCO)

**E. MATERIAL CERTIFICATIONS**

1. None

**F. STATEMENTS**

1. Statement letter of conformance and "No financial interest" dated Dec. 06, 2007, signed and sealed by Warren W. Schaefer, P.E.
2. Statement letter issued by Sargent & Greenleaf dated 12/15/07 that product has not changed, signed by Ed Miller.
3. Statement letter of Lab compliance, as part of above test reports.

**G. OTHER**

1. This NOA renews # 07-0618.20, expiring March 09, 2007. Ishaq I. Chanda

**Ishaq I. Chanda, P.E.**
**Product Control Examiner**
**NOA No 07-1219.12**
**Expiration Date: March 17, 2012**
**Approval Date: February 07, 2008**

| Sym | EAF | Revision | Date | Drawn | Check | App. |
|---|---|---|---|---|---|---|
| A | 12654 | NEW DRAWING | 3-9-99 | GL | | |

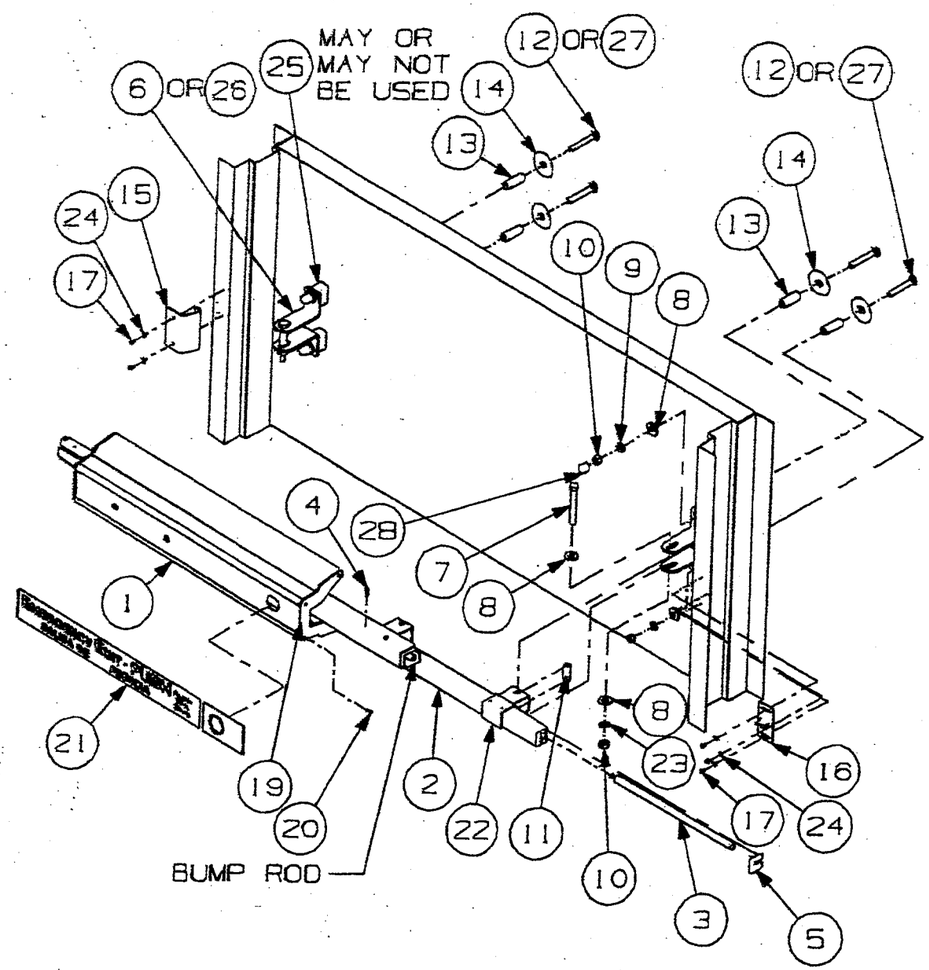


48.00 WIDTH UNIT SHOWN

| ITEM | QTY | DESCRIPTION |
|---|---|---|
| NA | 2 | 9-VOLT ALKALINE BATTERY |
| 1 | 1 | LOCK ASSEMBLY |
| 2 | 1 | TAILPIECE |
| 3 | 1 | EXTENSION ROD (AUTO UNITS ONLY) |
| 4 | 8 | THREAD-FORMING SCREW (#6-3/8" LG) |
| 5 | 1 | END CAP (FOR TAILPIECE) |
| 6 | 4 | DOOR BRACKET (3 1/2" X 2") |
| 7 | 2 | HEX HEAD BOLT (3/8" X 2 1/2" LG) |
| 8 | 8 | FLAT WASHER (3/8") |
| 9 | 4 | STAR LOCK WASHER (3/8") |
| 10 | 6 | HEX NUT (3/8"-16) |
| 11 | 2 | SUPPORT SLEEVE (1 1/4" LG) |
| 12 | 4 | CARRIAGE BOLT (3/8" X 2 1/2" LG) |
| 13 | 4 | SUPPORT TUBE (1 5/8" LG) |
| 14 | 4 | BOLT WASHER |
| 15 | 1 | STRIKE PLATE |
| 16 | 1 | RELEASE BRACKET (AUTO UNITS ONLY) |
| 17 | 5 | SELF-TAPPING SCREW (#10 X 3/4" LG) |
| NA | 1 | DRILL TEMPLATE |
| 19 | 2 | END CAP (FOR PUSH BAR) |
| 20 | 8 | SCREW (#6 X 3/4" LG) |
| 21 | 1 | EMERGENCY LABEL |
| 22 | 1 | EXTENSION COLLAR |
| 23 | 2 | SPLIT LOCK WASHER (3/8") |
| 24 | 5 | STAR LOCK WASHER (#10) |
| 25 | 4 | DOOR SPACER |
| 26 | 4 | DOOR BRACKET (1 1/2" X 2") |
| 27 | 4 | CARRIAGE BOLT (3/8" X 3 1/2" LG) |
| 28 | 4 | CAP (GRAY) |

| MODEL NUMBER | DESCRIPTION |
|---|---|
| A101-001 | AUTOMATIC LOCK ASSEMBLY |
| A102-001 | MANUAL LOCK ASSEMBLY |
| A101-002 | AUTOMATIC LOCK ASSEMBLY WITH ALARM |
| A102-002 | MANUAL LOCK ASSEMBLY WITH ALARM |

A100-INS

SK-6354-A

PRODUCT RENEWED
as complying with the Florida
Building Code
Acceptance No 07-1219.12
Expiration Date MAR 09, 2012
By Ishaq I. Chanda
Miami-Dade Product Control
Division

W.W. SCHAEFER ENGINEERING
& CONSULTING, P.A. (CA #6809)
8895 N. MILITARY TRAIL; SUITE
C-204
PALM BEACH GARDENS, FL 33410

JAN 11 2008

WARREN W. SCHAEFER, P.E.
STRUCTURAL ENGINEER
FLORIDA REG. #PE0044135

CRITICAL TO QUALITY SYMBOLS

- (E) ENGINEERING CRITICAL FOR COMPONENT FUNCTION
- (E-) ENGINEERING CRITICAL (AOL ONLY)
- (P) PROCESS CRITICAL FOR MANUFACTURE OR ASSEMBLY
- (P-) PROCESS CRITICAL (AOL ONLY)
- (Q) CRITICAL TO QUALITY

STANLEY SARGENT AND GREENLEAF
SARGENT AND GREENLEAF
1 SECURITY DRIVE,
NICHOLASVILLE, KY 40356

Tolerances
Unless Otherwise Specified:
FLATNESS WITHIN .005 PER INCH
CONCENTRICITY WITHIN .005 T.I.R.
BREAK ALL CORNERS .010
ANGLES ±0° 30'
DECIMAL .X ±.020, ±.50 MM
.XX ±.010, ±.25 MM
.XXX ±.005, ±.13 MM

Do Not Scale Drawing
DIMENSIONS GIVEN ABOUT CENTERLINE TO BE SYMMETRICAL WITHIN TOLERANCE.

Inch
Millimeter
Inch/Millimeter

Material: SEE CHART

Drawn: GL | Date: 3-9-99 | Scale: -----
Checked | Eng | Approved

Part Name: ARM-A-DOR PANIC DEVICE INSTALLATION DRAWING

Part Number: A100-INS

B

Sheet 1 of 2

| Sym | ECO | Revision | Date | Drawn | Check | Acp. |
|---|---|---|---|---|---|---|
| -- | ----- | SEE SHEET 1 OF 2 | 3-10-99 | GL | | |

A100-INS

PRODUCT RENEWED
as complying with the Florida
Building Code
Acceptance No 07-1219.12
Expiration Date MARCH 09, 2012
By Ishaq I. Chanda
Miami-Dade Product Control
Division

36.00 WIDTH UNIT SHOWN

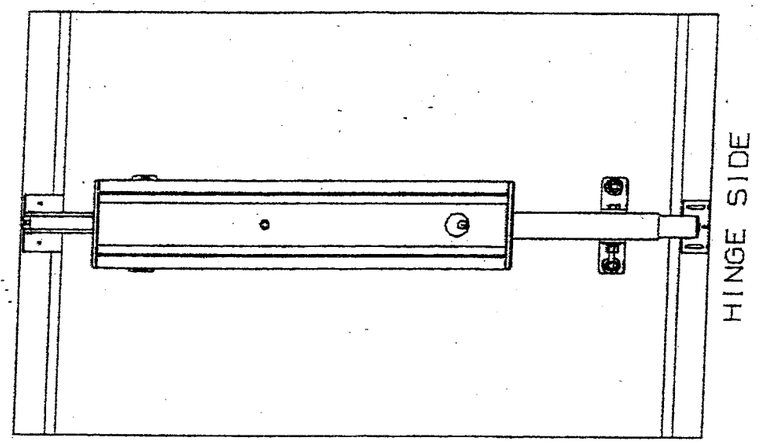


36.00 WIDTH UNIT SHOWN

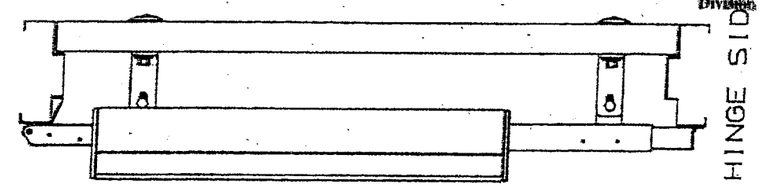


W.W. SCHAEFER ENGINEERING
& CONSULTING, P.A. (CA #6809)
8895 N. MILITARY TRAIL; SUITE
C-204
PALM BEACH GARDENS, FL 33410

JAN 11 2008

WARREN W. SCHAEFER, P.E.
STRUCTURAL ENGINEER
FLORIDA REG. #PE0044135

FOR DOOR JAMB WIDTH ABOVE 40.00, USE EXTENSION COLLAR AS SHOWN

48.00 WIDTH UNIT SHOWN

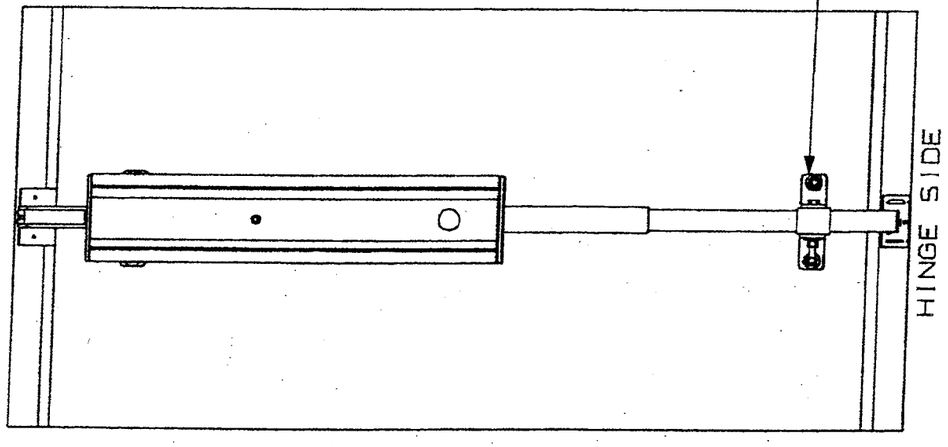


ELEVATION (FRONT) VIEW

48.00 WIDTH UNIT SHOWN

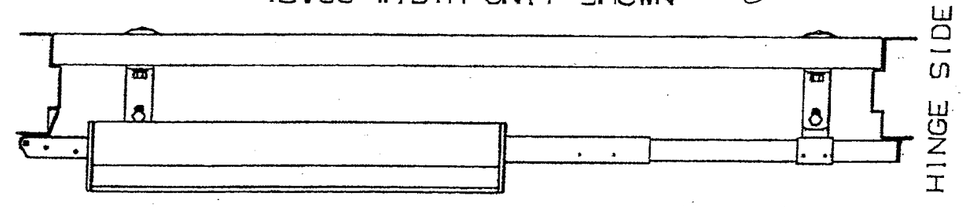


CROSS SECTION (TOP) VIEW

Sargent & Greenleaf, Inc.
1 Security Drive, Nicholasville, Kentucky 40356

**Tolerances**
Unless Otherwise Specified:
FLATNESS WITHIN .005 PER INCH
CONCENTRICITY WITHIN .005 T.I.R.
BREAK ALL CORNERS .010
ANGLES ±0° 30'
DECIMAL .X ±.020, ±.50 MM
.XX ±.010, ±.25 MM
.XXX ±.005, ±.13 MM

Do Not Scale Drawing
DIMENSIONS GIVEN ABOUT CENTERLINE TO BE SYMMETRICAL WITHIN TOLERANCE.

Material

Part Name: ARM-A-DOR PANIC DEVICE INSTALLATION DRAWING

Inch / Millimeter — Inch/Millimeter

| Drawn | Date | Scale |
|---|---|---|
| GL | 3-10-99 | ----- |
| Checked | Eng | Approved |

Part Number: A100-INS

B

Sheet 2 of 2