MIAMI-DADE COUNTY

BUILDING CODE COMPLIANCE OFFICE (BCCO)
PRODUCT CONTROL DIVISION

MIAMI-DADE COUNTY, FLORIDA
METRO-DADE FLAGLER BUILDING
140 WEST FLAGLER STREET, SUITE 1603
MIAMI, FLORIDA 33130-1563
(305) 375-2901 FAX (305) 375-2908
www.buldingcodeonline.com

NOTICE OF ACCEPTANCE (NOA)

NR Architectural Products
4348 Westroads Drive
West Palm Beach, FL 33407

SCOPE:
This NOA is being issued under the applicable rules and regulations governing the use of construction materials. The documentation submitted has been reviewed by Miami-Dade County Product Control Division and accepted by the Board of Rules and Appeals (BORA) to be used in Miami Dade County and other areas where allowed by the Authority Having Jurisdiction (AHJ).
This NOA shall not be valid after the expiration date stated below. The Miami-Dade County Product Control Division (In Miami Dade County) and/or the AHJ (in areas other than Miami Dade County) reserve the right to have this product or material tested for quality assurance purposes. If this product or material fails to perform in the accepted manner, the manufacturer will incur the expense of such testing and the AHJ may immediately revoke, modify, or suspend the use of such product or material within their jurisdiction. BORA reserves the right to revoke this acceptance, if it is determined by Miami-Dade County Product Control Division that this product or material fails to meet the requirements of the applicable building code.
This product is approved as described herein, and has been designed to comply with the Florida Building Code, including the High Velocity Hurricane Zone.

DESCRIPTION: Series 6000 Aluminum Window Wall System – S.M.I.

APPROVAL DOCUMENT: Drawing No. **W07-77**, titled "NRAP Fixed Window Wall Sys. Series 6000. (S.M.I.)", sheets 1 through 10 of 10, dated 08/27/07 with revision A dated 03/26/08, prepared by Al-Farooq Corporation, signed and sealed by Humayoun Farooq, P.E., bearing the Miami-Dade County Product Control Approval stamp with the Notice of Acceptance number and approval date by the Miami-Dade County Product Control Division.

MISSILE IMPACT RATING: Small Missile Impact Resistant

LABELING: Each unit shall bear a permanent label with the manufacturer's name or logo, city, state and following statement: "Miami-Dade County Product Control Approved", unless otherwise noted herein.

RENEWAL of this NOA shall be considered after a renewal application has been filed and there has been no change in the applicable building code negatively affecting the performance of this product.

TERMINATION of this NOA will occur after the expiration date or if there has been a revision or change in the materials, use, and/or manufacture of the product or process. Misuse of this NOA as an endorsement of any product, for sales, advertising or any other purposes shall automatically terminate this NOA. Failure to comply with any section of this NOA shall be cause for termination and removal of NOA.

ADVERTISEMENT: The NOA number preceded by the words Miami-Dade County, Florida, and followed by the expiration date may be displayed in advertising literature. If any portion of the NOA is displayed, then it shall be done in its entirety.

INSPECTION: A copy of this entire NOA shall be provided to the user by the manufacturer or its distributors and shall be available for inspection at the job site at the request of the Building Official.
This NOA consists of this page 1 and evidence page E-1, as well as approval document mentioned above.
The submitted documentation was reviewed by **Manuel Perez, P.E.**

MIAMI-DADE COUNTY APPROVED

NR Architectural Products

NOTICE OF ACCEPTANCE: EVIDENCE SUBMITTED

A. DRAWINGS

1. Manufacturer's die drawings and sections.
2. Drawing No **W07-77**, Sheets 1 through 10 of 10, titled "NRAP Fixed Window Wall Sys. Series 6000 (S.M.I.)", dated 08/27/07 with revision A dated 03/26/08, prepared by Al-Farooq Corporation, signed and sealed by Humayoun Farooq, P.E.

B. TESTS

1. Test reports on: 1) Air Infiltration Test, per FBC, TAS 202-94
   2) Uniform Static Air Pressure Test, Loading per FBC TAS 202-94
   3) Water Resistance Test, per FBC, TAS 202-94
   4) Large Missile Impact Test per FBC, TAS 201-94
   5) Cyclic Wind Pressure Loading per FBC, TAS 203-94

   along with marked-up drawings and installation diagram of an aluminum window wall system, prepared by Hurricane Test Laboratory, LLC, Test Report No. **HTL- 0242-0217-05,** Specimens M8, M9, M12a, M13 & M14 and **HTL-0242-0310-07,** Specimens M8a & M8b, dated 5/11/07, signed and sealed by Vinu J. Abraham, P.E.

C. CALCULATIONS

1. Anchor verification calculations and structural analysis, complying with FBC-2004, prepared by Al-Farooq Corporation, dated 11/14/07 and revised on 03/31/08, signed and sealed by Humayoun Farooq, P.E.
   Complies with ASTM E1300-02

D. QUALITY ASSURANCE

1. Miami Dade Building Code Compliance Office (BCCO).

E. MATERIAL CERTIFICATIONS

1. Notice of Acceptance No. **05-1208.02** issued to E.I. DuPont DeNemours & Co., Inc. for their "**DuPont Butacite PVB Interlayer**" dated 01/05/06, expiring on 12/11/10.
2. Notice of Acceptance No. **06-0216.06** issued to Solutia Inc. for their "**Saflex IIIG Clear or colored Interlayer**" dated 05/04/06, expiring on 05/21/11.

F. STATEMENTS

1. Statement letter of conformance, dated November 14, 2007, signed and sealed by Humayoun Farooq, P.E.
2. Statement letter of no financial interest, dated November 14, 2007, signed and sealed by Humayoun Farooq, P.E.
3. Laboratory compliance letter for Test Reports No. **HTL- 0242-0217-05,** Specimens M8, M9, M12a, M13 & M14 and **HTL-0242-0310-07,** Specimens M8a & M8b, issued by Hurricane Test Laboratory, Inc., dated May 11, 2007, signed and sealed by Vinu J. Abraham, P.E.

G. OTHER

1. None.

Manuel Perez, P.E.
Product Control Examiner
NOA No. 07-1219.15
Expiration Date: April 24, 2013
Approval Date: April 24, 2008

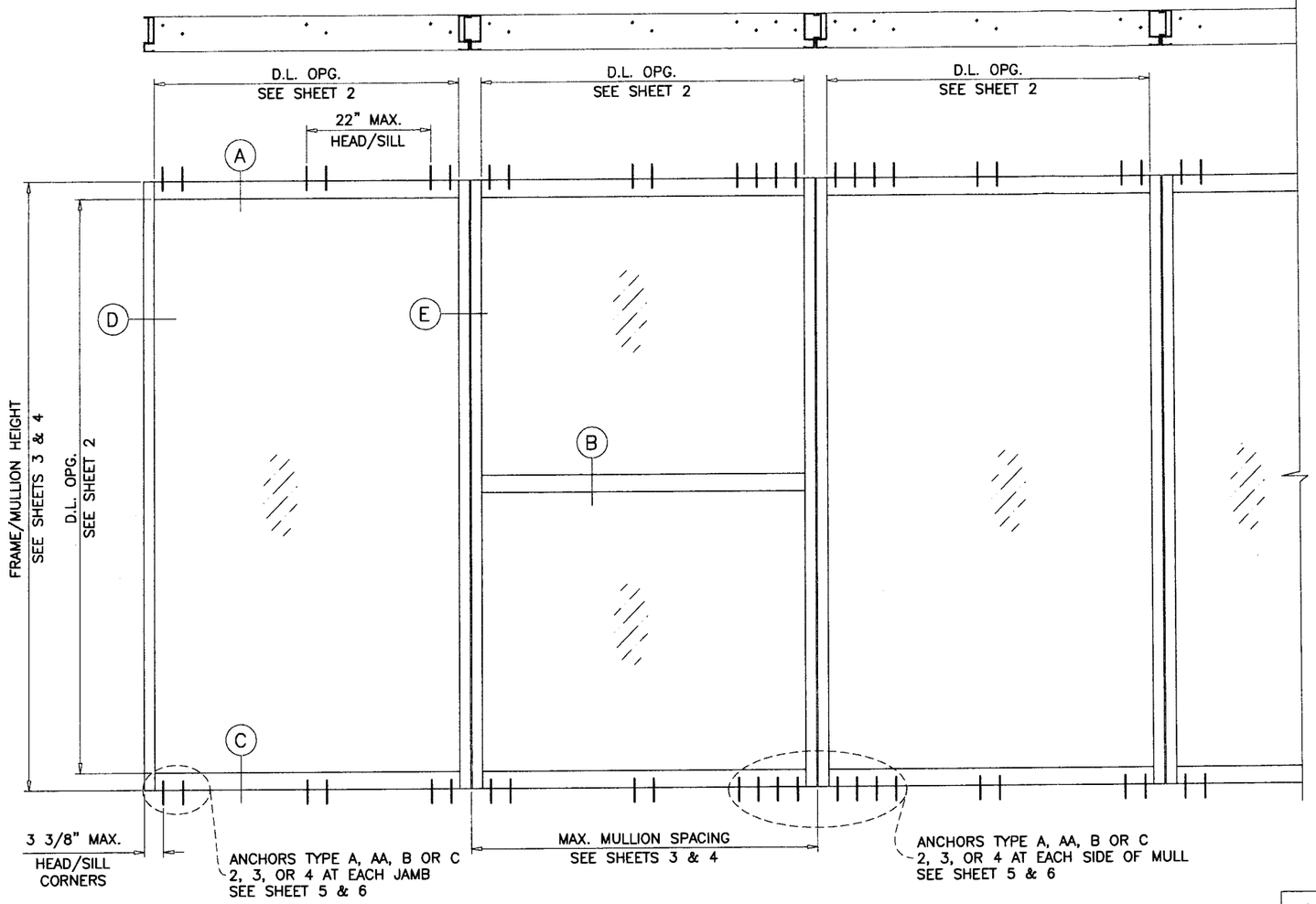

TYPICAL ELEVATIONS

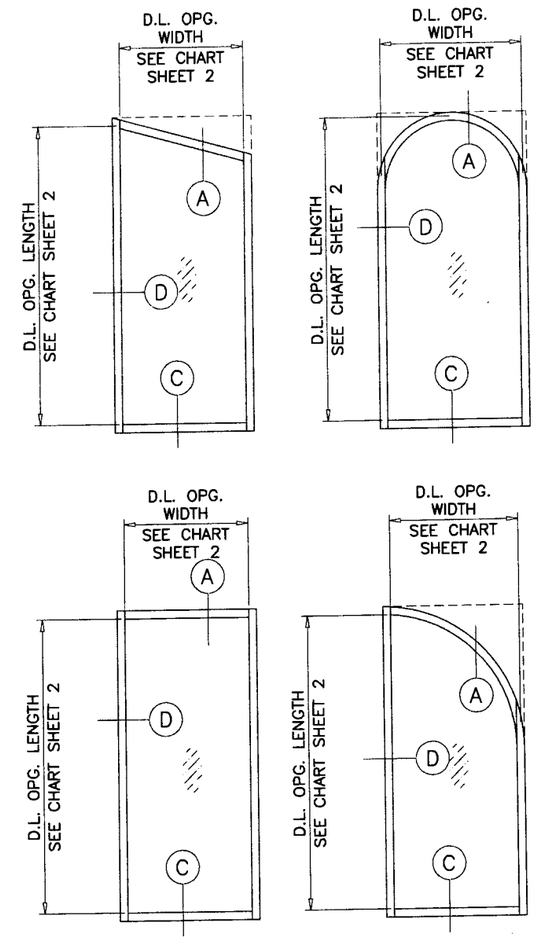

ALLOWABLE LOADS FOR ALTERNATE SHAPES AS SHOWN ABOVE OR SIMILAR CAN BE VERIFIED BY INSCRIBING PICTURE WINDOW SHAPE WITHIN SQUARE OR RECTANGLE AS SHOWN IN DOTTED LINES AND OBTAINING ALLOWABLE LOADS FROM THOSE SHAPES.

NRAP FIXED WINDOW WALL SYSTEM SERIES 6000

THIS SYSTEM IS RATED FOR SMALL MISSILE IMPACT.
MIAMI–DADE COUNTY APPROVED IMPACT RESISTANT SHUTTERS REQUIRED FOR INSTALLATIONS UP TO 30 FT. OF GRADE.
SHUTTERS NOT REQD. FOR INSTALLATIONS ABOVE 30 FT. OF GRADE.

CODE REQUIREMENTS FOR SAFEGUARDS MUST BE OBSERVED.

THIS PRODUCT HAS BEEN DESIGNED AND TESTED TO COMPLY WITH THE REQUIREMENTS OF THE FLORIDA BUILDING CODE 2004/2007 EDITION INCLUDING HIGH VELOCITY HURRICANE ZONE (HVHZ).

WOOD BUCKS BY OTHERS, MUST BE ANCHORED PROPERLY TO TRANSFER LOADS TO THE STRUCTURE.

ANCHORS SHALL BE AS LISTED, SPACED AS SHOWN ON DETAILS, ANCHORS EMBEDMENT TO BASE MATERIAL SHALL BE BEYOND WALL DRESSING OR STUCCO.

ANCHORING OR LOADING CONDITIONS NOT SHOWN IN THESE DETAILS ARE NOT PART OF THIS APPROVAL.

A LOAD DURATION INCREASE IN ALLOWABLE STRESS IS USED IN DESIGN OF ANCHORS INTO WOOD ONLY.

MATERIALS INCLUDING BUT NOT LIMITED TO STEEL/METAL SCREWS, THAT COME INTO CONTACT WITH OTHER DISSIMILAR MATERIALS SHALL MEET THE REQUIREMENTS OF 2004 FLORIDA BLDG. CODE SECTION 2003.8.4.

INSTRUCTIONS:

USE CHARTS AS FOLLOWS.

STEP 1 DETERMINE DESIGN WIND LOAD REQUIREMENT BASED ON WIND VELOCITY, BLDG. HEIGHT, WIND ZONE USING APPLICABLE ASCE 7 STANDARD.

STEP 2 SEE CHARTS ON SHEET 2 FOR DESIGN LOAD CAPACITY OF DESIRED GLASS SIZE.

STEP 3 CHECK MULLION CAPACITY FOR A GIVEN SPACING AND HEIGHT USING CHARTS ON SHEETS 3 & 4 THE CAPACITY SHOULD EXCEED THE DESIGN LOAD.

STEP 4 USING CHARTS ON SHEET 5 & 6 SELECT ANCHOR OPTION WITH DESIGN RATING MORE THAN DESIGN LOAD SPECIFIED IN STEP 1 ABOVE.

STEP 5 THE LOWEST VALUE RESULTING FROM STEPS 2, 3 AND 4 SHALL APPLY TO ENTIRE SYSTEM.

LAMINATED GLASS
SMALL MISSILE IMPACT

Engr: DR. HUMAYOUN FAROOQ
STRUCTURES
FLA. PE # 16557
C.A.N. 3538

APR 0 1 2008

Approved as complying with the Florida Building Code
Date APRIL 24 2008
NOA# 07-1219.15
Miami Dade Product Control Division
By Manuel Perez

AL-FAROOQ CORPORATION
ENGINEERS & PRODUCT DEVELOPMENT
1235 S.W. 87 AVE
MIAMI, FLORIDA 33174
TEL. (305) 264-8100 FAX. (305) 262-6978
STORE\W07-77NR

NRAP FIXED WINDOW WALL SYS. SERIES 6000 (S.M.I.)

NR ARCHITECTURAL PRODUCTS
4348 WESTROADS DRIVE
WEST PALM BEACH, FL. 33407
TEL. (561) 844-1121 FAX. (561) 844-6131

revisions:			
no	date	by	description
A	03.26.08		ANCHORS REV.

date: 08-27-07
scale: 1/2"=1'-0"
dr. by: HAMID
chk. by:

drawing no.
W07-77

GLASS LOAD CAPACITY - PSF		
NOMINAL DIMS.		LAM. GLASS
D.L.O. WIDTH	D.L.O. HEIGHT	EXT.(+)/INT.(-)
32-1/4"	78"	140.0
38-1/4"		140.0
44-1/4"		140.0
50-1/4"		140.0
56-1/4"		140.0
62-1/4"		137.5
68-1/4"		133.7
32-1/4"	84"	140.0
38-1/4"		140.0
44-1/4"		140.0
50-1/4"		140.0
56-1/4"		136.6
62-1/4"		132.5
68-1/4"		124.4
32-1/4"	90"	140.0
38-1/4"		140.0
44-1/4"		140.0
50-1/4"		139.0
56-1/4"		131.9
62-1/4"		122.9
68-1/4"		115.2
32-1/4"	96"	140.0
38-1/4"		140.0
44-1/4"		140.0
50-1/4"		131.2
56-1/4"		122.7
62-1/4"		113.7
32-1/4"	102"	140.0
38-1/4"		140.0
44-1/4"		139.5
50-1/4"		126.5
56-1/4"		114.7
62-1/4"		106.7
32-1/4"	108"	140.0
38-1/4"		140.0
44-1/4"		133.3
50-1/4"		119.4
56-1/4"		107.6
32-1/4"	113"	140.0
38-1/4"		140.0
44-1/4"		128.9
50-1/4"		114.4
56-1/4"		102.5
57-1/2"		100.9
32-1/4"	120"	140.0
38-1/4"		140.0
44-1/4"		126.3
32-1/4"	125"	140.0
38-1/4"		140.0
44-1/4"		122.4

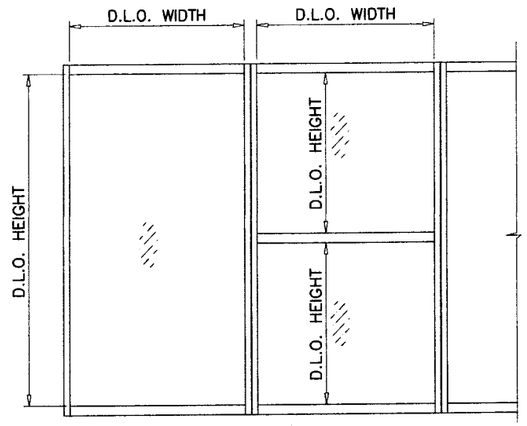

D.L.O. WIDTH = PANEL WIDTH - 3.75"
D.L.O. HEIGHT = PANEL HEIGHT - 6.0"

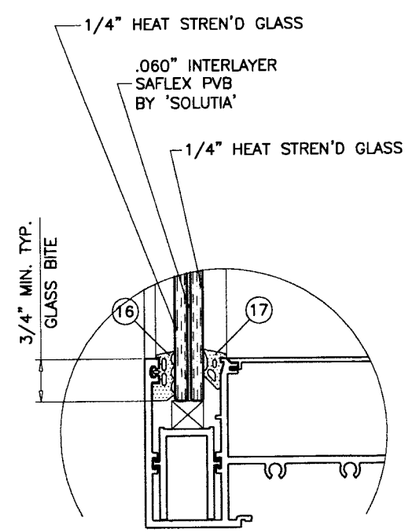

GLASS TYPE 'A'

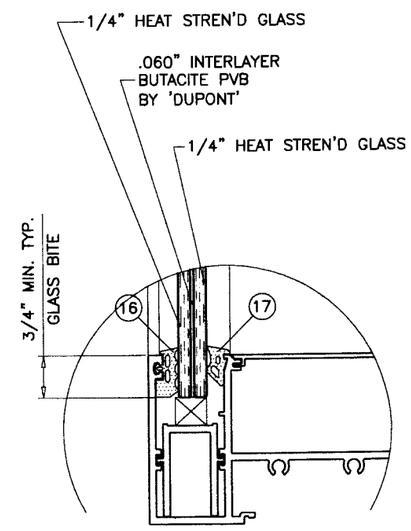

GLASS TYPE 'B'

GLAZING OPTIONS

NOTE:
GLASS CAPACITIES ON THIS SHEET ARE BASED ON ASTM E1300-02 (3 SEC. GUSTS).

Engr: DR. HUMAYOUN FAROOQ
STRUCTURES
FLA. P.E. # 16557
C.A.N. 3538

APR 01 2008

Approved as complying with the Florida Building Code
Date APRIL 24 2008
NOA# 07-1219.15
Miami Dade Product Control Division
By Manuel Perez

AL-FAROOQ CORPORATION
ENGINEERS & PRODUCT DEVELOPMENT
1235 S.W. 87 AVE
MIAMI, FLORIDA 33174
TEL. (305) 264-8100 FAX. (305) 262-6978
STORE\W07-77NR

NRAP FIXED WINDOW WALL SYS. SERIES 6000 (S.M.I.)

NR ARCHITECTURAL PRODUCTS
4348 WESTROADS DRIVE
WEST PALM BEACH, FL. 33407
TEL. (561) 844-1121 FAX. (561) 844-6131

revisions:			
no	date	by	description
A	03.26.08		NO CHANGE THIS SHEET

date: 08-27-07
scale: -
dr. by: HAMID
chk. by:

drawing no. W07-77

MULLION LOAD CAPACITY - PSF
MULLIONS WITHOUT INTERMEDIATE HORIZONTALS

NOMINAL DIMS.		JAMB 'J1'		MULL 'M1'		MULL 'M2'		JAMB 'J2' MULL 'M3'		MULL 'M4'		JAMB 'J3'	
WIDTH (W)	FRAME HEIGHT	EXT.(+)	INT.(−)	EXT.(+)	INT.(−)	EXT.(+)	INT.(−)	EXT.(+)	INT.(−)	EXT.(+)	INT.(−)	EXT.(+)	INT.(−)
36"	84"	120.0	140.0	120.0	140.0	120.0	140.0	120.0	140.0	102.0	102.0	120.0	140.0
42"		120.0	140.0	120.0	140.0	120.0	140.0	120.0	140.0	102.0	102.0	120.0	140.0
48"		120.0	140.0	120.0	140.0	120.0	140.0	120.0	140.0	102.0	102.0	120.0	140.0
54"		120.0	140.0	120.0	140.0	120.0	140.0	120.0	140.0	102.0	102.0	120.0	140.0
60"		120.0	140.0	120.0	140.0	120.0	140.0	120.0	140.0	102.0	102.0	120.0	140.0
66"		120.0	140.0	120.0	140.0	120.0	140.0	120.0	140.0	102.0	102.0	120.0	140.0
72"		120.0	140.0	120.0	140.0	120.0	140.0	120.0	140.0	102.0	102.0	120.0	140.0
36"	90"	120.0	140.0	120.0	140.0	120.0	140.0	120.0	140.0	102.0	102.0	120.0	140.0
42"		120.0	140.0	120.0	140.0	120.0	140.0	120.0	140.0	102.0	102.0	120.0	140.0
48"		120.0	140.0	120.0	140.0	120.0	140.0	120.0	140.0	102.0	102.0	120.0	140.0
54"		120.0	140.0	120.0	140.0	120.0	140.0	120.0	140.0	102.0	102.0	120.0	140.0
60"		120.0	140.0	120.0	140.0	120.0	140.0	120.0	140.0	102.0	102.0	120.0	140.0
66"		120.0	140.0	120.0	140.0	120.0	140.0	120.0	140.0	102.0	102.0	120.0	140.0
72"		120.0	140.0	120.0	140.0	120.0	140.0	120.0	140.0	102.0	102.0	120.0	140.0
36"	96"	120.0	140.0	120.0	140.0	120.0	140.0	120.0	140.0	102.0	102.0	120.0	140.0
42"		120.0	140.0	120.0	140.0	120.0	140.0	120.0	140.0	102.0	102.0	120.0	140.0
48"		120.0	140.0	120.0	140.0	120.0	140.0	120.0	140.0	102.0	102.0	120.0	140.0
54"		120.0	140.0	120.0	140.0	120.0	140.0	120.0	140.0	102.0	102.0	120.0	140.0
60"		120.0	140.0	120.0	140.0	120.0	140.0	120.0	140.0	102.0	102.0	120.0	140.0
66"		120.0	140.0	120.0	140.0	120.0	140.0	120.0	140.0	102.0	102.0	120.0	140.0
72"		120.0	140.0	120.0	140.0	120.0	140.0	120.0	140.0	102.0	102.0	120.0	140.0
36"	102"	120.0	140.0	120.0	140.0	120.0	140.0	120.0	140.0	102.0	102.0	120.0	140.0
42"		120.0	140.0	120.0	140.0	120.0	140.0	120.0	140.0	102.0	102.0	120.0	140.0
48"		120.0	140.0	120.0	140.0	120.0	140.0	120.0	140.0	102.0	102.0	120.0	140.0
54"		120.0	140.0	120.0	140.0	120.0	140.0	120.0	140.0	102.0	102.0	120.0	140.0
60"		120.0	140.0	120.0	140.0	120.0	140.0	120.0	140.0	102.0	102.0	120.0	140.0
66"		120.0	140.0	120.0	140.0	120.0	140.0	120.0	140.0	102.0	102.0	120.0	132.8
72"		120.0	138.4	120.0	138.4	120.0	138.4	120.0	138.4	100.8	100.8	120.0	125.6
36"	108"	120.0	140.0	120.0	140.0	120.0	140.0	120.0	140.0	102.0	102.0	120.0	140.0
42"		120.0	140.0	120.0	140.0	120.0	140.0	120.0	140.0	102.0	102.0	120.0	140.0
48"		120.0	140.0	120.0	140.0	120.0	140.0	120.0	140.0	102.0	102.0	120.0	140.0
54"		120.0	140.0	120.0	140.0	120.0	140.0	120.0	140.0	102.0	102.0	120.0	134.7
60"		120.0	140.0	120.0	140.0	120.0	140.0	120.0	140.0	102.0	102.0	120.0	123.8
66"		120.0	140.0	120.0	140.0	120.0	140.0	120.0	140.0	102.0	102.0	115.4	115.4
36"	114"	120.0	140.0	120.0	140.0	120.0	140.0	120.0	140.0	102.0	102.0	120.0	140.0
42"		120.0	140.0	120.0	140.0	120.0	140.0	120.0	140.0	102.0	102.0	120.0	140.0
48"		120.0	140.0	120.0	140.0	120.0	140.0	120.0	140.0	102.0	102.0	120.0	131.4
54"		120.0	140.0	120.0	140.0	120.0	140.0	120.0	140.0	102.0	102.0	118.8	118.8
60"		120.0	140.0	120.0	140.0	120.0	140.0	120.0	140.0	102.0	102.0	108.9	108.9
36"	119"	120.0	140.0	120.0	140.0	120.0	140.0	120.0	140.0	102.0	102.0	120.0	140.0
42"		120.0	140.0	120.0	140.0	120.0	140.0	120.0	140.0	102.0	102.0	120.0	134.5
48"		120.0	140.0	120.0	140.0	120.0	140.0	120.0	140.0	102.0	102.0	119.2	119.2
54"		120.0	139.9	120.0	139.9	120.0	140.0	120.0	140.0	102.0	102.0	107.6	107.6
60"		120.0	128.1	120.0	128.1	120.0	135.9	120.0	140.0	102.0	102.0	98.5	98.5
61"		120.0	126.4	120.0	126.4	120.0	134.0	120.0	140.0	102.0	102.0	97.2	97.2
36"	126"	102.0	120.0	–	–	102.0	120.0	–	–	–	–	–	–
42"		102.0	120.0	–	–	102.0	120.0	–	–	–	–	–	–
48"		102.0	108.7	–	–	102.0	108.7	–	–	–	–	–	–
36"	131"	102.0	120.0	–	–	102.0	120.0	–	–	–	–	–	–
42"		102.0	115.2	–	–	102.0	115.2	–	–	–	–	–	–
48"		102.0	103.6	–	–	102.0	103.6	–	–	–	–	–	–

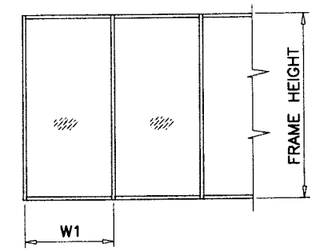

WIDTH (W) = W1
AT FRAME JAMB

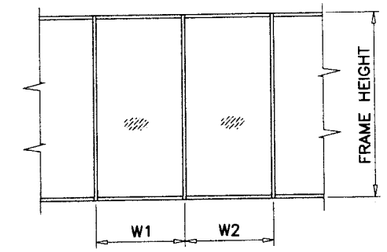

WIDTH (W) = $\frac{W1 + W2}{2}$
AT FRAME MULLION

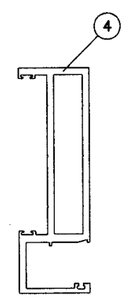

JAMB 'J1'

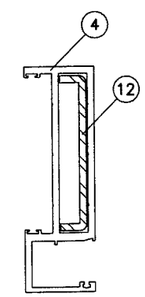

JAMB 'J2'

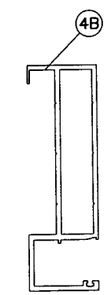

JAMB 'J3'

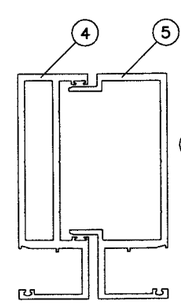

MULLION 'M1'

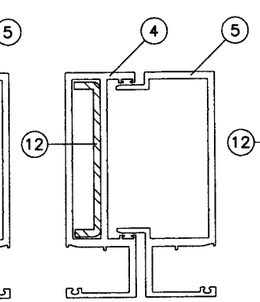

MULLION 'M2'

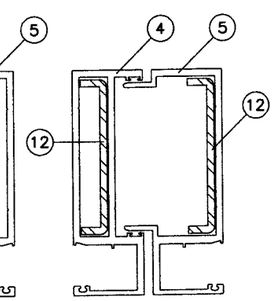

MULLION 'M3'

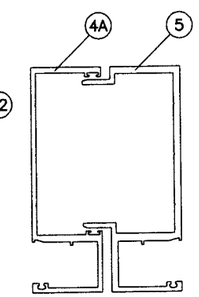

MULLION 'M4'

Engr: DR. HUMAYOUN FAROOQ
STRUCTURES
FLA. PE # 16557
C.A.N. 3538

APR 01 2008

Approved as complying with the Florida Building Code
Date APRIL 24, 2008
NOA# 07-1219.15
Miami Dade Product Control Division
By Manuel Perez

AL-FAROOQ CORPORATION
ENGINEERS & PRODUCT DEVELOPMENT
1235 S.W. 87 AVE
MIAMI, FLORIDA 33174
TEL. (305) 264-8100 FAX. (305) 262-6978
STORE\W07-77NR

NRAP FIXED WINDOW WALL SYS. SERIES 6000 (S.M.I.)

NR ARCHITECTURAL PRODUCTS
4348 WESTROADS DRIVE
WEST PALM BEACH, FL. 33407
TEL. (561) 844-1121 FAX. (561) 844-6131

revisions:

no	date	by	description
A	03.26.08		NO CHANGE THIS SHEET

date: 08-27-07
scale: –
dr. by: HAMID
chk. by:

drawing no.
W07-77

MULLION LOAD CAPACITY – PSF
MULLIONS WITH INTERMEDIATE HORIZONTALS

NOMINAL DIMS.		JAMB 'J1'		MULL 'M1'		MULL 'M2'		JAMB 'J2' MULL 'M3'		MULL 'M4'		JAMB 'J3'	
WIDTH (W)	FRAME HEIGHT	EXT.(+)	INT.(–)	EXT.(+)	INT.(–)	EXT.(+)	INT.(–)	EXT.(+)	INT.(–)	EXT.(+)	INT.(–)	EXT.(+)	INT.(–)
36"	84"	120.0	140.0	120.0	140.0	120.0	140.0	120.0	140.0	102.0	102.0	120.0	140.0
42"		120.0	140.0	120.0	140.0	120.0	140.0	120.0	140.0	102.0	102.0	120.0	140.0
48"		120.0	140.0	120.0	140.0	120.0	140.0	120.0	140.0	102.0	102.0	120.0	140.0
54"		120.0	140.0	120.0	140.0	120.0	140.0	120.0	140.0	102.0	102.0	120.0	140.0
60"		120.0	140.0	120.0	140.0	120.0	140.0	120.0	140.0	102.0	102.0	120.0	140.0
66"		120.0	140.0	120.0	140.0	120.0	140.0	120.0	140.0	102.0	102.0	120.0	140.0
72"		120.0	140.0	120.0	140.0	120.0	140.0	120.0	140.0	102.0	102.0	120.0	140.0
36"	90"	120.0	140.0	120.0	140.0	120.0	140.0	120.0	140.0	102.0	102.0	120.0	140.0
42"		120.0	140.0	120.0	140.0	120.0	140.0	120.0	140.0	102.0	102.0	120.0	140.0
48"		120.0	140.0	120.0	140.0	120.0	140.0	120.0	140.0	102.0	102.0	120.0	140.0
54"		120.0	140.0	120.0	140.0	120.0	140.0	120.0	140.0	102.0	102.0	120.0	140.0
60"		120.0	140.0	120.0	140.0	120.0	140.0	120.0	140.0	102.0	102.0	120.0	140.0
66"		120.0	140.0	120.0	140.0	120.0	140.0	120.0	140.0	102.0	102.0	120.0	140.0
72"		120.0	140.0	120.0	140.0	120.0	140.0	120.0	140.0	102.0	102.0	120.0	140.0
36"	96"	120.0	140.0	120.0	140.0	120.0	140.0	120.0	140.0	102.0	102.0	120.0	140.0
42"		120.0	140.0	120.0	140.0	120.0	140.0	120.0	140.0	102.0	102.0	120.0	140.0
48"		120.0	140.0	120.0	140.0	120.0	140.0	120.0	140.0	102.0	102.0	120.0	140.0
54"		120.0	140.0	120.0	140.0	120.0	140.0	120.0	140.0	102.0	102.0	120.0	140.0
60"		120.0	140.0	120.0	140.0	120.0	140.0	120.0	140.0	102.0	102.0	120.0	140.0
66"		120.0	140.0	120.0	140.0	120.0	140.0	120.0	140.0	102.0	102.0	120.0	134.6
72"		120.0	140.0	120.0	140.0	120.0	140.0	120.0	140.0	102.0	102.0	120.0	123.3
36"	102"	120.0	140.0	120.0	140.0	120.0	140.0	120.0	140.0	102.0	102.0	120.0	140.0
42"		120.0	140.0	120.0	140.0	120.0	140.0	120.0	140.0	102.0	102.0	120.0	140.0
48"		120.0	140.0	120.0	140.0	120.0	140.0	120.0	140.0	102.0	102.0	120.0	140.0
54"		120.0	140.0	120.0	140.0	120.0	140.0	120.0	140.0	102.0	102.0	120.0	140.0
60"		120.0	140.0	120.0	140.0	120.0	140.0	120.0	140.0	102.0	102.0	120.0	129.9
66"		120.0	140.0	120.0	140.0	120.0	140.0	120.0	140.0	102.0	102.0	118.1	118.1
72"		120.0	138.4	120.0	138.4	120.0	138.4	120.0	140.0	100.8	100.8	108.2	108.2
36"	108"	120.0	140.0	120.0	140.0	120.0	140.0	120.0	140.0	102.0	102.0	120.0	140.0
42"		120.0	140.0	120.0	140.0	120.0	140.0	120.0	140.0	102.0	102.0	120.0	140.0
48"		120.0	140.0	120.0	140.0	120.0	140.0	120.0	140.0	102.0	102.0	120.0	140.0
54"		120.0	140.0	120.0	140.0	120.0	140.0	120.0	140.0	102.0	102.0	120.0	127.5
60"		120.0	140.0	120.0	140.0	120.0	140.0	120.0	140.0	102.0	102.0	114.8	114.8
66"		120.0	135.0	120.0	135.0	120.0	137.5	120.0	140.0	102.0	102.0	104.4	104.4
36"	114"	120.0	140.0	120.0	140.0	120.0	140.0	120.0	140.0	102.0	102.0	120.0	140.0
42"		120.0	140.0	120.0	140.0	120.0	140.0	120.0	140.0	102.0	102.0	120.0	140.0
48"		120.0	140.0	120.0	140.0	120.0	140.0	120.0	140.0	102.0	102.0	120.0	127.6
54"		120.0	140.0	120.0	140.0	120.0	140.0	120.0	140.0	102.0	102.0	113.4	113.4
60"		120.0	132.2	120.0	132.2	120.0	135.8	120.0	140.0	102.0	102.0	102.1	102.1
36"	119"	120.0	140.0	120.0	140.0	120.0	140.0	120.0	140.0	102.0	102.0	120.0	140.0
42"		120.0	140.0	120.0	140.0	120.0	140.0	120.0	140.0	102.0	102.0	120.0	132.9
48"		120.0	140.0	120.0	140.0	120.0	140.0	120.0	140.0	102.0	102.0	116.3	116.3
54"		120.0	134.0	120.0	134.0	120.0	138.5	120.0	140.0	102.0	102.0	103.4	103.4
60"		120.0	120.6	120.0	120.6	120.0	124.6	120.0	140.0	98.8	98.8	93.0	93.0
61"		118.6	118.6	118.6	118.6	120.0	122.6	120.0	140.0	97.2	97.2	91.5	91.5
36"	126"	102.0	117.3	–	–	102.0	117.3	–	–	–	–	–	–
42"		100.6	100.6	–	–	100.6	100.6	–	–	–	–	–	–
48"		88.0	88.0	–	–	88.0	88.0	–	–	–	–	–	–
36"	131"	102.0	112.9	–	–	102.0	112.9	–	–	–	–	–	–
42"		96.7	96.7	–	–	96.7	96.7	–	–	–	–	–	–
48"		84.7	84.7	–	–	84.7	84.7	–	–	–	–	–	–

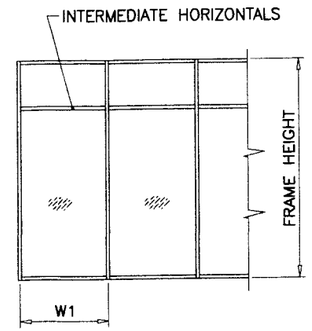

WIDTH (W) = W1
AT FRAME JAMB

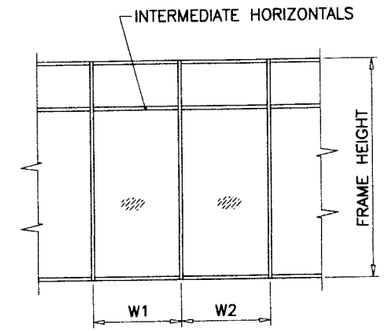

WIDTH (W) = $\frac{W1 + W2}{2}$
AT FRAME MULLION

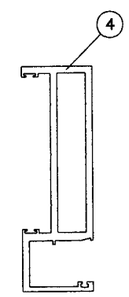

JAMB 'J1'

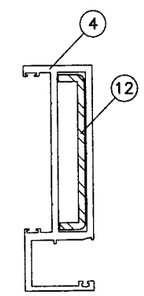

JAMB 'J2'

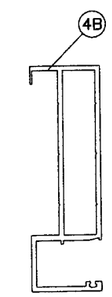

JAMB 'J3'

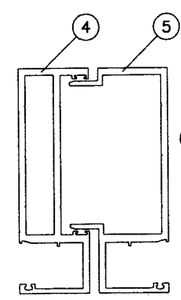

MULLION 'M1'

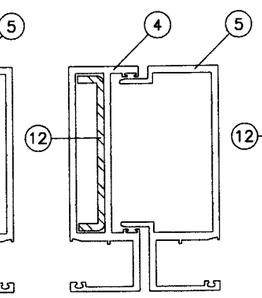

MULLION 'M2'

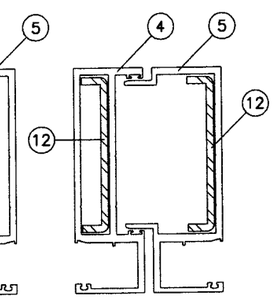

MULLION 'M3'

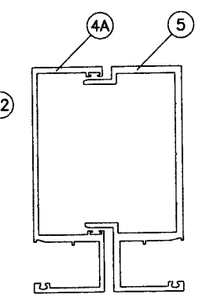

MULLION 'M4'

Engr: DR. HUMAYOUN FAROOQ
STRUCTURES
FLA. PE # 16557
C.A.N. 3538

APR 01 2008

Approved as complying with the Florida Building Code
Date APRIL 24, 2008
NOA# 07-1219.15
Miami Dade Product Control Division
By Manuel Perez

AL-FAROOQ CORPORATION
ENGINEERS & PRODUCT DEVELOPMENT
1235 S.W. 87 AVE
MIAMI, FLORIDA 33174
TEL. (305) 264-8100 FAX. (305) 262-6978
STORE\W07-77NR

NRAP FIXED WINDOW WALL SYS. SERIES 6000 (S.M.I.)

NR ARCHITECTURAL PRODUCTS
4348 WESTROADS DRIVE
WEST PALM BEACH, FL. 33407
TEL. (561) 844-1121 FAX. (561) 844-6131

revisions:

no	date	by	description
A	03.26.08		NO CHANGE THIS SHEET

date: 08-27-07
scale: –
dr. by: HAMID
chk. by:

drawing no.
W07-77

ANCHOR LOAD CAPACITY – PSF
MULLIONS WITHOUT INTERMEDIATE HORIZONTALS
EXT.(+) & INT.(–)

NOMINAL DIMS.		1/2" MAX. SHIM SPACE									1/4" MAX. SHIM SPACE		
		ANCHORS TYPE 'A'			ANCHORS TYPE 'AA'			ANCHORS TYPE 'C'			ANCH. TYPE 'AA'		ANCH. TYPE 'B'
WIDTH (W)	FRAME HEIGHT	A4	A6	A8	AA4	AA6	AA8	C4	C6	C8	AA4	AA6	B4
36"	84"	140.0	140.0	140.0	140.0	140.0	140.0	140.0	140.0	140.0	140.0	140.0	140.0
42"		140.0	140.0	140.0	140.0	140.0	140.0	140.0	140.0	140.0	140.0	140.0	140.0
48"		140.0	140.0	140.0	140.0	140.0	140.0	140.0	140.0	140.0	140.0	140.0	140.0
54"		140.0	140.0	140.0	140.0	140.0	140.0	140.0	140.0	140.0	140.0	140.0	140.0
60"		140.0	140.0	140.0	140.0	140.0	140.0	140.0	140.0	140.0	140.0	140.0	140.0
66"		140.0	140.0	140.0	140.0	140.0	140.0	140.0	140.0	140.0	140.0	140.0	140.0
72"		140.0	140.0	140.0	140.0	140.0	140.0	140.0	140.0	140.0	140.0	140.0	140.0
36"	90"	140.0	140.0	140.0	140.0	140.0	140.0	140.0	140.0	140.0	140.0	140.0	140.0
42"		140.0	140.0	140.0	140.0	140.0	140.0	140.0	140.0	140.0	140.0	140.0	140.0
48"		140.0	140.0	140.0	140.0	140.0	140.0	140.0	140.0	140.0	140.0	140.0	140.0
54"		140.0	140.0	140.0	140.0	140.0	140.0	140.0	140.0	140.0	140.0	140.0	140.0
60"		140.0	140.0	140.0	140.0	140.0	140.0	134.7	140.0	140.0	140.0	140.0	140.0
66"		140.0	140.0	140.0	140.0	140.0	140.0	128.9	140.0	140.0	140.0	140.0	140.0
72"		140.0	140.0	140.0	140.0	140.0	140.0	124.7	140.0	140.0	140.0	140.0	140.0
36"	96"	140.0	140.0	140.0	140.0	140.0	140.0	140.0	140.0	140.0	140.0	140.0	140.0
42"		140.0	140.0	140.0	140.0	140.0	140.0	140.0	140.0	140.0	140.0	140.0	140.0
48"		140.0	140.0	140.0	140.0	140.0	140.0	140.0	140.0	140.0	140.0	140.0	140.0
54"		140.0	140.0	140.0	140.0	140.0	140.0	130.2	140.0	140.0	140.0	140.0	140.0
60"		138.8	140.0	140.0	140.0	140.0	140.0	122.5	140.0	140.0	140.0	140.0	140.0
66"		132.2	140.0	140.0	140.0	140.0	140.0	116.6	140.0	140.0	140.0	140.0	140.0
72"		127.2	140.0	140.0	140.0	140.0	140.0	112.3	140.0	140.0	140.0	140.0	140.0
36"	102"	140.0	140.0	140.0	140.0	140.0	140.0	140.0	140.0	140.0	140.0	140.0	140.0
42"		140.0	140.0	140.0	140.0	140.0	140.0	140.0	140.0	140.0	140.0	140.0	140.0
48"		140.0	140.0	140.0	140.0	140.0	140.0	129.5	140.0	140.0	140.0	140.0	140.0
54"		135.7	140.0	140.0	140.0	140.0	140.0	119.8	140.0	140.0	140.0	140.0	140.0
60"		127.2	140.0	140.0	140.0	140.0	140.0	112.3	140.0	140.0	140.0	140.0	140.0
66"		120.7	140.0	140.0	135.1	140.0	140.0	106.5	140.0	140.0	140.0	140.0	140.0
72"		115.6	140.0	140.0	129.5	140.0	140.0	102.1	140.0	140.0	140.0	140.0	140.0
36"	108"	140.0	140.0	140.0	140.0	140.0	140.0	140.0	140.0	140.0	140.0	140.0	140.0
42"		140.0	140.0	140.0	140.0	140.0	140.0	132.7	140.0	140.0	140.0	140.0	140.0
48"		136.3	140.0	140.0	140.0	140.0	140.0	120.3	140.0	140.0	140.0	140.0	140.0
54"		125.6	140.0	140.0	140.0	140.0	140.0	110.9	140.0	140.0	140.0	140.0	140.0
60"		117.4	140.0	140.0	131.4	140.0	140.0	103.6	140.0	140.0	140.0	140.0	140.0
66"		111.0	140.0	140.0	124.3	140.0	140.0	98.0	140.0	140.0	140.0	140.0	140.0
36"	114"	140.0	140.0	140.0	140.0	140.0	140.0	140.0	140.0	140.0	140.0	140.0	140.0
42"		140.0	140.0	140.0	140.0	140.0	140.0	124.2	140.0	140.0	140.0	140.0	140.0
48"		127.2	140.0	140.0	140.0	140.0	140.0	112.3	140.0	140.0	140.0	140.0	140.0
54"		117.0	140.0	140.0	130.9	140.0	140.0	103.2	140.0	140.0	140.0	140.0	140.0
60"		109.0	140.0	140.0	122.1	140.0	140.0	96.2	140.0	140.0	140.0	140.0	140.0
61"		107.9	140.0	140.0	120.8	140.0	140.0	95.2	140.0	140.0	140.0	140.0	140.0
36"	119"	140.0	140.0	140.0	140.0	140.0	140.0	133.4	140.0	140.0	140.0	140.0	140.0
42"		133.5	140.0	140.0	140.0	140.0	140.0	117.8	140.0	140.0	140.0	140.0	140.0
48"		120.5	140.0	140.0	134.9	140.0	140.0	106.4	140.0	140.0	140.0	140.0	140.0
54"		110.6	140.0	140.0	123.8	140.0	140.0	97.6	140.0	140.0	140.0	140.0	140.0
60"		102.9	140.0	140.0	115.2	140.0	140.0	90.8	136.2	140.0	140.0	140.0	140.0
61"		101.8	140.0	140.0	114.0	140.0	140.0	89.8	134.8	140.0	140.0	140.0	140.0
36"	126"	120.0	120.0	120.0	120.0	120.0	120.0	120.0	120.0	120.0	120.0	120.0	140.0
42"		120.0	120.0	120.0	120.0	120.0	120.0	110.0	120.0	120.0	120.0	120.0	140.0
48"		112.2	120.0	120.0	120.0	120.0	120.0	99.1	120.0	120.0	120.0	120.0	140.0
36"	131"	120.0	120.0	120.0	120.0	120.0	120.0	119.2	120.0	120.0	120.0	120.0	140.0
42"		118.9	120.0	120.0	120.0	120.0	120.0	105.0	120.0	120.0	120.0	120.0	140.0
48"		107.0	120.0	120.0	119.8	120.0	120.0	94.4	120.0	120.0	120.0	120.0	140.0

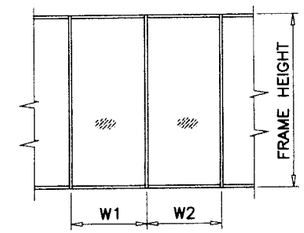

$$\text{WIDTH (W)} = \frac{W1 + W2}{2} \text{ (MULLION)}$$

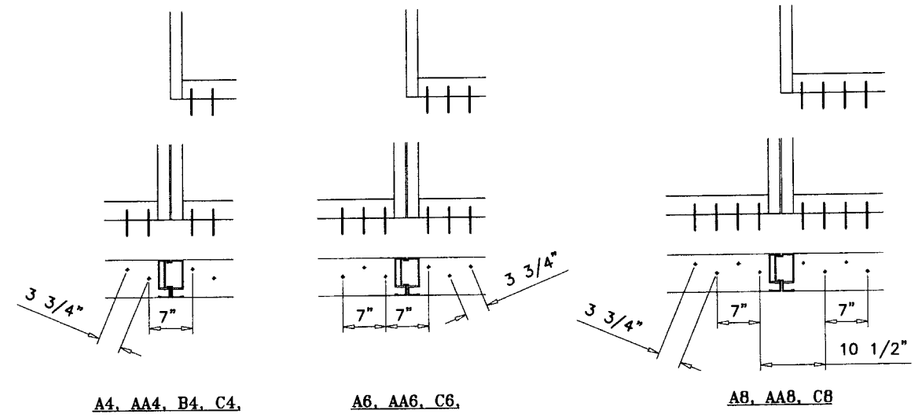

A4, AA4, B4, C4. A6, AA6, C6. A8, AA8, C8

ANCHORS TYPES: SEE SHEET 7 FOR DESCRIPTION

A4 = (2) ANCHORS TYPE 'A' AT EACH SIDE OF JAMB & MULLION
AA4 = (2) ANCHORS TYPE 'AA' AT EACH SIDE OF JAMB & MULLION
B4 = (2) ANCHORS TYPE 'B' AT EACH SIDE OF JAMB & MULLION
C4 = (2) ANCHORS TYPE 'C' AT EACH SIDE OF JAMB & MULLION

A6 = (3) ANCHORS TYPE 'A' AT EACH SIDE OF JAMB & MULLION
AA6 = (3) ANCHORS TYPE 'AA' AT EACH SIDE OF JAMB & MULLION
C6 = (3) ANCHORS TYPE 'C' AT EACH SIDE OF JAMB & MULLION

A8 = (4) ANCHORS TYPE 'A' AT EACH SIDE OF JAMB & MULLION
AA8 = (4) ANCHORS TYPE 'AA' AT EACH SIDE OF JAMB & MULLION
C8 = (4) ANCHORS TYPE 'C' AT EACH SIDE OF JAMB & MULLION

ALL OTHER ANCHORS TO BE SPACED AS PER ELEVATION.

Engr: DR. HUMAYOUN FAROOQ
STRUCTURES
FLA. PE # 16557
C.A.N. 3538

APR 0 1 2008

Approved as complying with the Florida Buiding Code
Date: APRIL 24, 2008
NOA# 07-1219.15
Miami Dade Product Control Division
By: Manuel Perez

AL-FAROOQ CORPORATION
ENGINEERS & PRODUCT DEVELOPMENT
1235 S.W. 87 AVE
MIAMI, FLORIDA 33174
TEL. (305) 264-8100 FAX. (305) 262-6978
STORE\W07-77NR

NRAP FIXED WINDOW WALL SYS. SERIES 6000 (S.M.I.)
NR ARCHITECTURAL PRODUCTS
4348 WESTROADS DRIVE
WEST PALM BEACH, FL. 33407
TEL. (561) 844-6131 FAX. (561) 844-6131

revisions:

no	date	by	description
A	03.26.08		ANCHOR CHARTS REV.

date: 08-27-07
scale: –
dr. by: HAMID
chk. by:

drawing no. W07-77

ANCHOR LOAD CAPACITY – PSF
MULLIONS WITH INTERMEDIATE HORIZONTALS
EXT.(+) & INT.(–)

NOMINAL DIMS.		1/2" MAX. SHIM SPACE									1/4" MAX. SHIM SPACE		
		ANCHORS TYPE 'A'			ANCHORS TYPE 'AA'			ANCHORS TYPE 'C'			ANCH. TYPE 'AA'		ANCH. TYPE 'B'
WIDTH (W)	FRAME HEIGHT	A4	A6	A8	AA4	AA6	AA8	C4	C6	C8	AA4	AA6	B4
36"	84"	140.0	140.0	140.0	140.0	140.0	140.0	140.0	140.0	140.0	140.0	140.0	140.0
42"		140.0	140.0	140.0	140.0	140.0	140.0	137.5	140.0	140.0	140.0	140.0	140.0
48"		136.3	140.0	140.0	140.0	140.0	140.0	120.3	140.0	140.0	140.0	140.0	140.0
54"		121.1	140.0	140.0	135.6	140.0	140.0	106.9	140.0	140.0	140.0	140.0	140.0
60"		109.0	140.0	140.0	122.1	140.0	140.0	96.2	140.0	140.0	140.0	140.0	140.0
66"		99.1	140.0	140.0	111.0	140.0	140.0	87.5	131.2	140.0	140.0	140.0	140.0
72"		90.9	136.3	140.0	101.7	140.0	140.0	80.2	120.3	140.0	140.0	140.0	140.0
36"	90"	140.0	140.0	140.0	140.0	140.0	140.0	140.0	140.0	140.0	140.0	140.0	140.0
42"		140.0	140.0	140.0	140.0	140.0	140.0	128.3	140.0	140.0	140.0	140.0	140.0
48"		127.2	140.0	140.0	140.0	140.0	140.0	112.3	140.0	140.0	140.0	140.0	140.0
54"		113.1	140.0	140.0	126.6	140.0	140.0	99.8	140.0	140.0	140.0	140.0	140.0
60"		101.8	140.0	140.0	113.9	140.0	140.0	89.8	134.7	140.0	140.0	140.0	140.0
66"		92.5	138.8	140.0	103.6	140.0	140.0	81.6	122.5	140.0	140.0	140.0	140.0
72"		84.8	127.2	140.0	94.9	140.0	140.0	74.8	112.3	140.0	140.0	140.0	140.0
36"	96"	140.0	140.0	140.0	140.0	140.0	140.0	140.0	140.0	140.0	140.0	140.0	140.0
42"		136.3	140.0	140.0	140.0	140.0	140.0	120.3	140.0	140.0	140.0	140.0	140.0
48"		119.3	140.0	140.0	133.5	140.0	140.0	105.3	140.0	140.0	140.0	140.0	140.0
54"		106.0	140.0	140.0	118.7	140.0	140.0	93.6	140.0	140.0	140.0	140.0	140.0
60"		95.4	140.0	140.0	106.8	140.0	140.0	84.2	126.3	140.0	140.0	140.0	140.0
66"		86.7	130.1	140.0	97.1	140.0	140.0	76.5	114.8	140.0	140.0	140.0	140.0
72"		79.5	119.3	140.0	89.0	133.5	140.0	70.2	105.3	140.0	134.1	140.0	140.0
36"	102"	140.0	140.0	140.0	140.0	140.0	140.0	132.1	140.0	140.0	140.0	140.0	140.0
42"		128.3	140.0	140.0	140.0	140.0	140.0	113.2	140.0	140.0	140.0	140.0	140.0
48"		112.2	140.0	140.0	125.6	140.0	140.0	99.1	140.0	140.0	140.0	140.0	140.0
54"		99.8	140.0	140.0	111.7	140.0	140.0	88.1	132.1	140.0	140.0	140.0	140.0
60"		89.8	134.7	140.0	100.5	140.0	140.0	79.2	118.9	140.0	140.0	140.0	140.0
66"		81.6	122.4	140.0	91.4	137.1	140.0	72.0	108.1	140.0	137.7	140.0	140.0
72"		74.8	112.2	140.0	83.8	125.6	140.0	66.0	99.1	132.1	126.2	140.0	140.0
36"	108"	140.0	140.0	140.0	140.0	140.0	140.0	124.7	140.0	140.0	140.0	140.0	140.0
42"		121.1	140.0	140.0	135.6	140.0	140.0	106.9	140.0	140.0	140.0	140.0	140.0
48"		106.0	140.0	140.0	118.7	140.0	140.0	93.6	140.0	140.0	140.0	140.0	140.0
54"		94.2	140.0	140.0	105.5	140.0	140.0	83.2	124.7	140.0	140.0	140.0	140.0
60"		84.8	127.2	140.0	94.9	140.0	140.0	74.8	112.3	140.0	140.0	140.0	140.0
66"		77.1	115.6	140.0	86.3	129.5	140.0	68.0	102.1	136.1	130.1	140.0	140.0
36"	114"	133.9	140.0	140.0	140.0	140.0	140.0	118.2	140.0	140.0	140.0	140.0	140.0
42"		114.8	140.0	140.0	128.5	140.0	140.0	101.3	140.0	140.0	140.0	140.0	140.0
48"		100.4	140.0	140.0	112.4	140.0	140.0	88.6	132.9	140.0	140.0	140.0	140.0
54"		89.3	133.9	140.0	99.9	140.0	140.0	78.8	118.2	140.0	140.0	140.0	140.0
60"		80.3	120.5	140.0	89.9	134.9	140.0	70.9	106.4	140.0	135.5	140.0	140.0
61"		79.0	118.5	140.0	88.5	132.7	140.0	69.7	104.6	139.5	133.3	140.0	140.0
36"	119"	128.3	140.0	140.0	140.0	140.0	140.0	113.2	140.0	140.0	140.0	140.0	140.0
42"		109.9	140.0	140.0	123.1	140.0	140.0	97.0	140.0	140.0	140.0	140.0	140.0
48"		96.2	140.0	140.0	107.7	140.0	140.0	84.9	127.4	140.0	140.0	140.0	140.0
54"		85.5	128.3	140.0	95.7	140.0	140.0	75.5	113.2	140.0	140.0	140.0	140.0
60"		77.0	115.4	140.0	86.2	129.2	140.0	67.9	101.9	135.9	129.8	140.0	140.0
61"		75.7	113.5	140.0	84.7	127.1	140.0	66.8	100.2	133.6	127.7	140.0	140.0
36"	126"	120.0	120.0	120.0	120.0	120.0	120.0	106.9	120.0	120.0	120.0	120.0	140.0
42"		103.8	120.0	120.0	116.2	120.0	120.0	91.6	120.0	120.0	120.0	120.0	140.0
48"		90.9	120.0	120.0	101.7	120.0	120.0	80.2	120.0	120.0	120.0	120.0	140.0
36"	131"	116.5	120.0	120.0	120.0	120.0	120.0	102.8	120.0	120.0	120.0	120.0	140.0
42"		99.9	120.0	120.0	111.8	120.0	120.0	88.1	120.0	120.0	120.0	120.0	140.0
48"		87.4	120.0	120.0	97.8	120.0	120.0	77.1	115.7	120.0	120.0	120.0	140.0

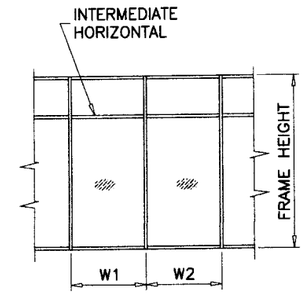

$$\text{WIDTH (W)} = \frac{W1 + W2}{2} \text{ (MULLION)}$$

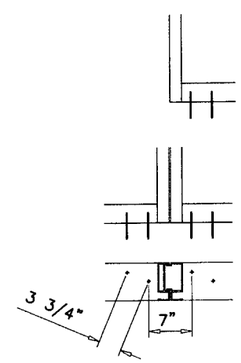

A4, AA4, B4, C4.

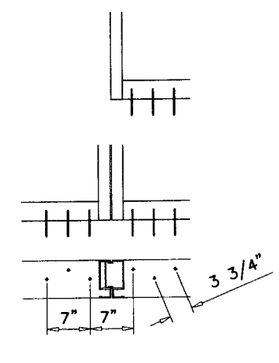

A6, AA6, C6.

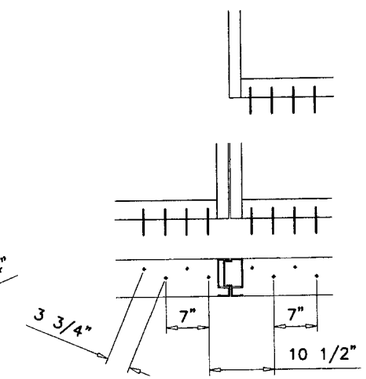

A8, AA8, C8

ANCHORS TYPES: SEE SHEET 7 FOR DESCRIPTION

A4 = (2) ANCHORS TYPE 'A' AT EACH SIDE OF JAMB & MULLION
AA4 = (2) ANCHORS TYPE 'AA' AT EACH SIDE OF JAMB & MULLION
B4 = (2) ANCHORS TYPE 'B' AT EACH SIDE OF JAMB & MULLION
C4 = (2) ANCHORS TYPE 'C' AT EACH SIDE OF JAMB & MULLION

A6 = (3) ANCHORS TYPE 'A' AT EACH SIDE OF JAMB & MULLION
AA6 = (3) ANCHORS TYPE 'AA' AT EACH SIDE OF JAMB & MULLION
C6 = (3) ANCHORS TYPE 'C' AT EACH SIDE OF JAMB & MULLION

A8 = (4) ANCHORS TYPE 'A' AT EACH SIDE OF JAMB & MULLION
AA8 = (4) ANCHORS TYPE 'AA' AT EACH SIDE OF JAMB & MULLION
C8 = (4) ANCHORS TYPE 'C' AT EACH SIDE OF JAMB & MULLION

ALL OTHER ANCHORS TO BE SPACED AS PER ELEVATION.

Engr: DR. HUMAYOUN FAROOQ
STRUCTURES
FLA. PE # 16557
C.A.N. 3538

APR 01 2008

Approved as complying with the Florida Buiding Code
Date APRIL 24, 2008
NOA# 07-1219.15
Miami Dade Product Control Division
By

AL-FAROOQ CORPORATION
ENGINEERS & PRODUCT DEVELOPMENT
1235 S.W. 87 AVE
MIAMI, FLORIDA 33174
TEL. (305) 264-8100 FAX. (305) 262-6978
STORE\W07-77NR

NRAP FIXED WINDOW WALL SYS. SERIES 6000 (S.M.I.)

NR ARCHITECTURAL PRODUCTS
4348 WESTROADS DRIVE
WEST PALM BEACH, FL. 33407
TEL. (561) 844-1121 FAX. (561) 844-6131

revisions:

no	date	by	description
A	03.26.08		ANCHOR CHARTS REV.

date: 08-27-07
scale: –
dr. by: HAMID
chk. by:

drawing no. W07-77

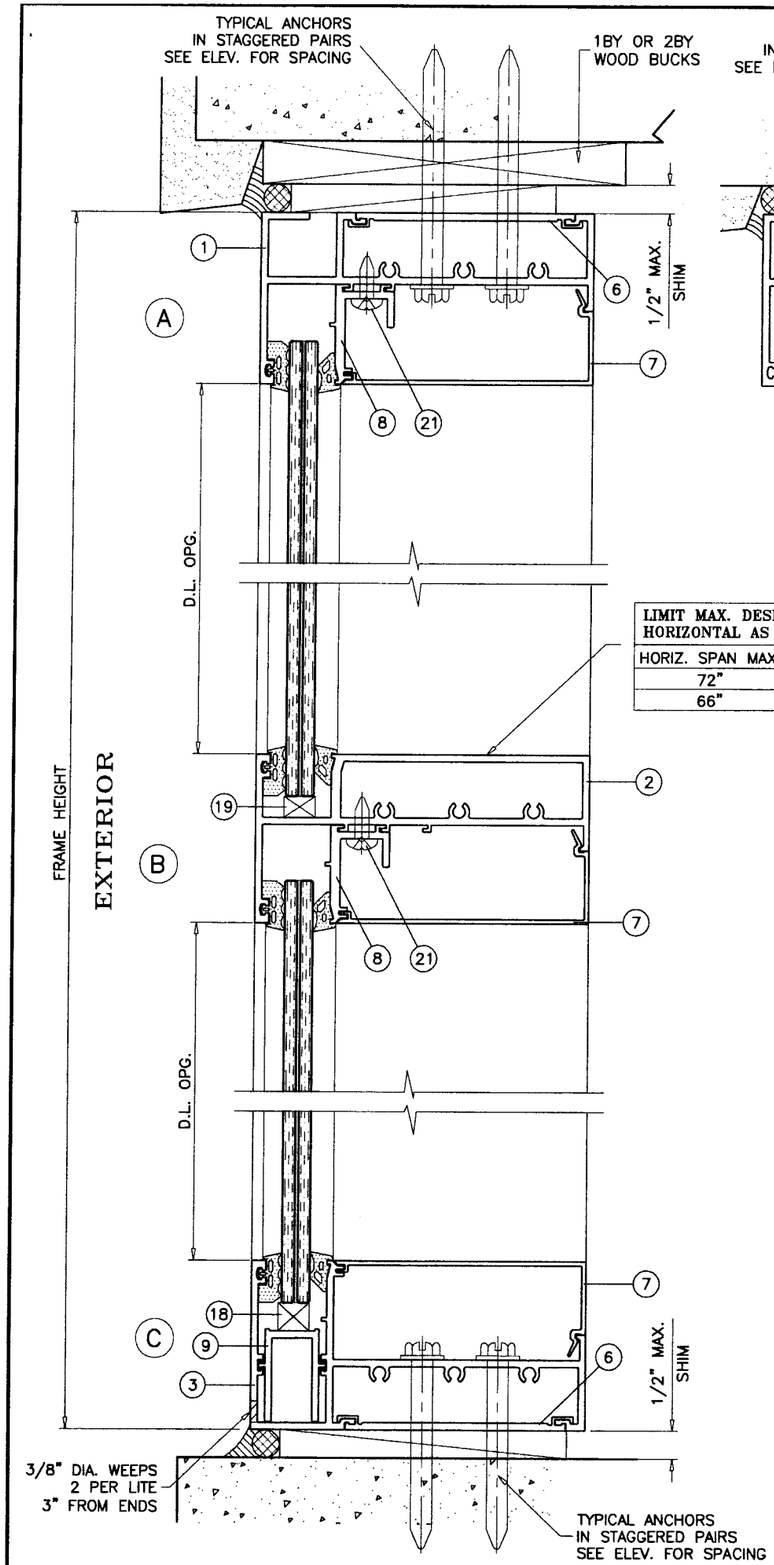

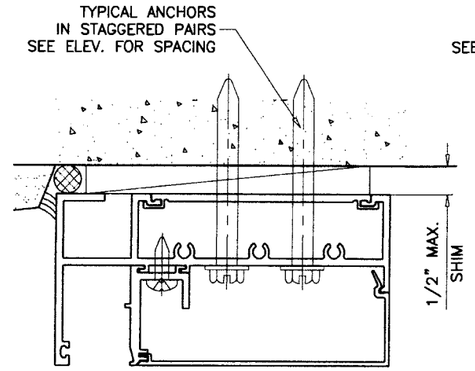

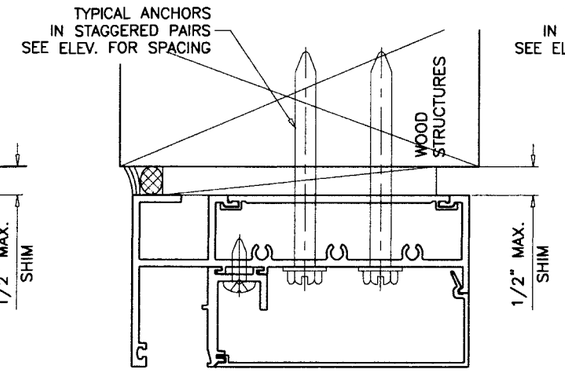

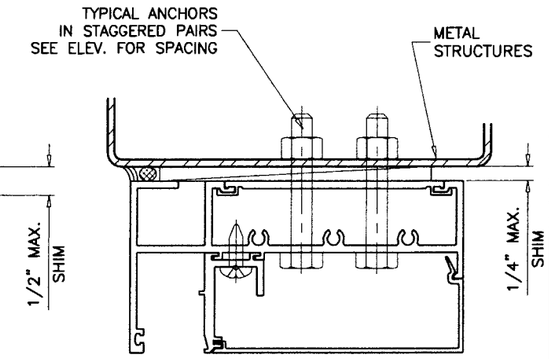

LIMIT MAX. DESIGN LOADS FOR HORIZONTAL AS FOLLOWS	
HORIZ. SPAN MAX.	LAM. GLASS
72"	132 PSF
66"	140 PSF

WOOD BUCKS AND METAL STRUCTURES NOT BY N.R. WDW. MUST SUPPORT LOADS IMPOSED BY GLAZING SYSTEM AND TRANSFER THEM TO THE BUILDING STRUCTURE.

TYPICAL ANCHORS: SEE ELEV. FOR SPACING

TYPE 'A'– 3/8" DIA. WEDGE–BOLT ANCHOR BY 'POWERS'
THRU 1BY OR 2BY WOOD BUCKS INTO CONCRETE
WITH 1–1/2" MIN. EMBED INTO CONCRETE

TYPE 'AA'– 3/8" DIA. WEDGE–BOLT ANCHOR BY 'POWERS'
DIRECTLY INTO CONCRETE
WITH 1–1/4" MIN. EMBED INTO CONC.

TYPE 'B'– 3/8" DIA. MACHINE BOLT GRADE 5 W/ WASHER & NUT
INTO METAL STRUCTURES
STEEL : 12 GA. MIN. (Fy = 36 KSI MIN.)
ALUMINUM : 1/8" THK. MIN. (6063–T6 MIN.)
(STEEL IN CONTACT WITH ALUMINUM TO BE PLATED OR PAINTED)

TYPE 'C'– 3/8" DIA. LAG SCREWS
INTO WOOD STRUCTURES
WITH 2" MIN. PENETRATION INTO WOOD

ANCHOR EDGE DISTANCES
INTO CONCRETE AND MASONRY = 3" MIN.
INTO METAL STRUCTURE = 1" MIN.
INTO WOOD STRUCTURE = 1" MIN.

SEALANTS:

ALL FRAME CORNERS AND JOINTS SEALED WITH
DOW–795 OR TREMCO SPECTREM 2 SILICONE SEALANT.

Engr: DR. HUMAYOUN FAROOQ
STRUCTURES
FLA. PE # 16557
C.A.N. 3538

APR 01 2008

Approved as complying with the Florida Buiding Code
Date: APRIL 24, 2008
NOA# 07-1215.15
Miami Dade Product Control Division
By: Mario Diaz

AL-FAROOQ CORPORATION
ENGINEERS & PRODUCT DEVELOPMENT
1235 S.W. 87 AVE
MIAMI, FLORIDA 33174
TEL. (305) 264-8100 FAX. (305) 262-6978
STORE\W07-77NR

NR ARCHITECTURAL PRODUCTS
4348 WESTROADS DRIVE
WEST PALM BEACH, FL. 33407
TEL. (561) 844-1121 FAX. (561) 844-6131

NRAP FIXED WINDOW WALL SYS. SERIES 6000 (S.M.I.)

revisions:			
no	date	by	description
A	03.26.08		ANCHORS REV.

date: 08-27-07
scale: 3/8" = 1"
dr. by: HAMID
chk. by:

drawing no.
W07–77

sheet 7 of 10

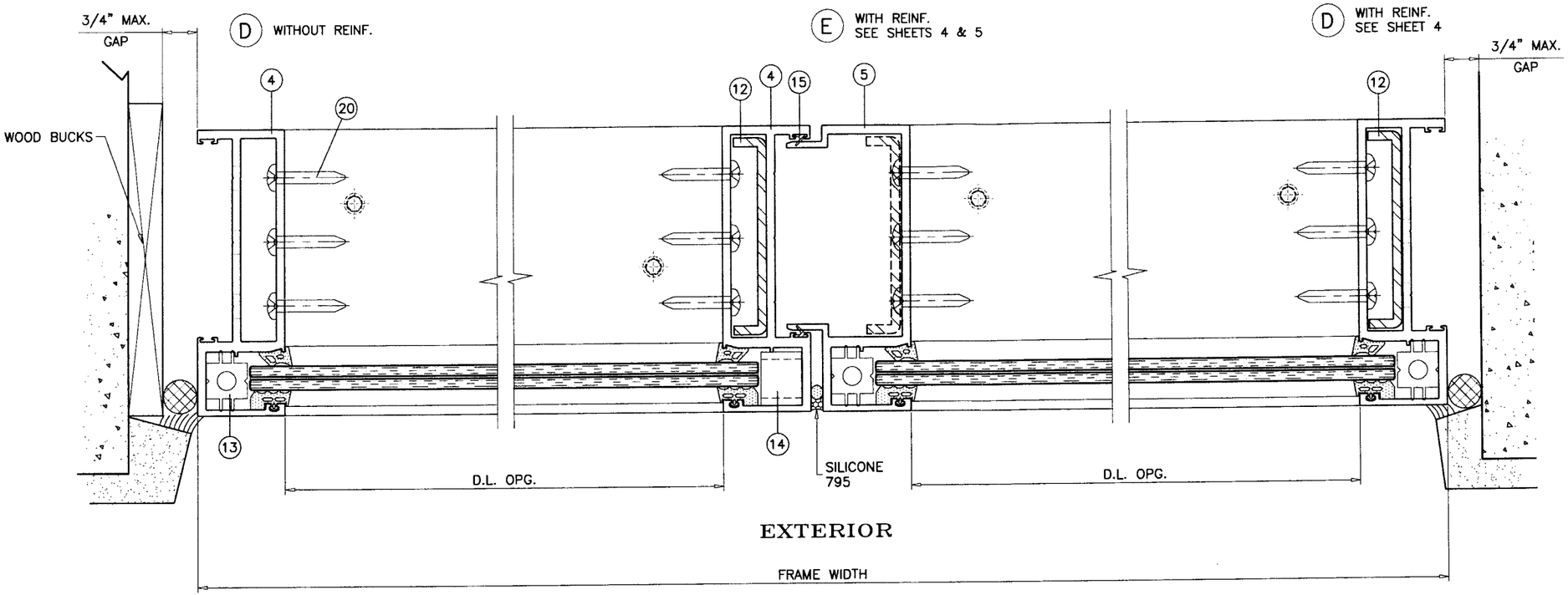

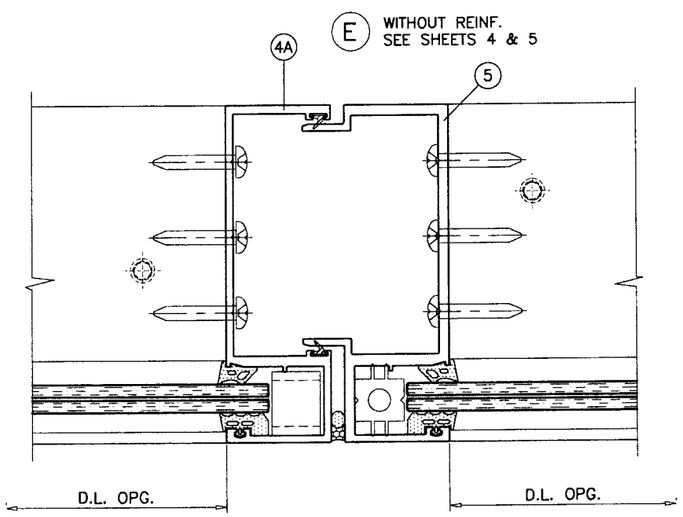

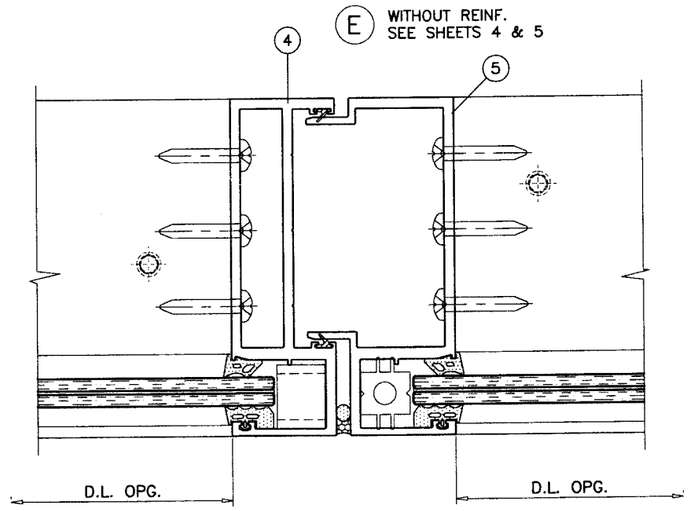

Engr: DR. HUMAYOUN FAROOQ
STRUCTURES
FLA. PE # 16557
C.A.N. 3538

APR 01 2008

Approved as complying with the Florida Building Code
Date APRIL 24, 2008
NOA# 07-1219.15
Miami Dade Product Control Division
By Manuel Perez

AL-FAROOQ CORPORATION
ENGINEERS & PRODUCT DEVELOPMENT
1235 S.W. 87 AVE
MIAMI, FLORIDA 33174
TEL. (305) 264-8100 FAX. (305) 262-6978

STORE\W07-77NR

NRAP FIXED WINDOW WALL SYS. SERIES 6000 (S.M.I.)

NR ARCHITECTURAL PRODUCTS
4348 WESTROADS DRIVE
WEST PALM BEACH, FL. 33407
TEL. (561) 844-1121 FAX. (561) 844-6131

revisions:

no	date	by	description
A	03.26.08		NO CHANGE THIS SHEET

date: 08-27-07
scale: 3/8" = 1"
dr. by: HAMID
chk. by:

drawing no.
W07-77

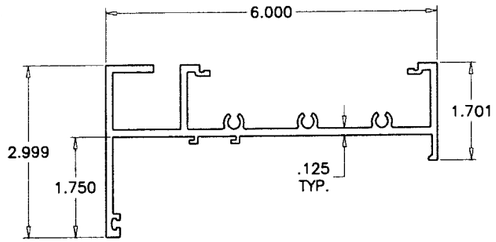

1 FRAME HEAD

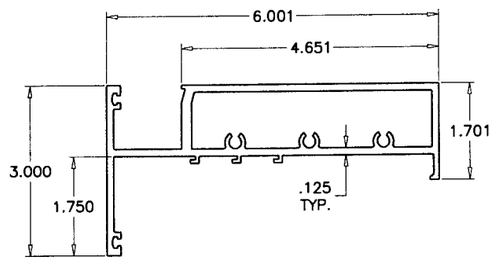

2 INTERMEDIATE HORIZONTAL

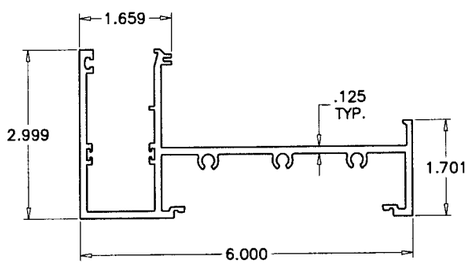

3 FRAME SILL

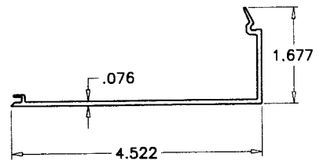

7 SNAP ON COVER

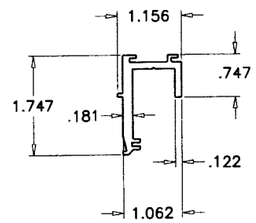

8 GLASS STOP

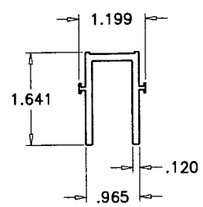

9 GLASS CHAIR

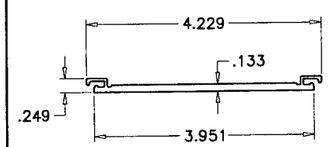

6 INSTALLATION PLATE

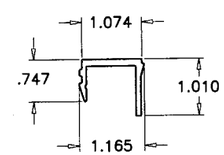

10 POCKET FILLER

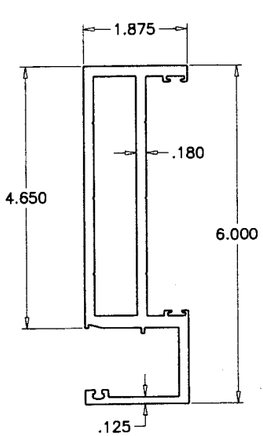

4 FRAME JAMB/FEMALE MULLION

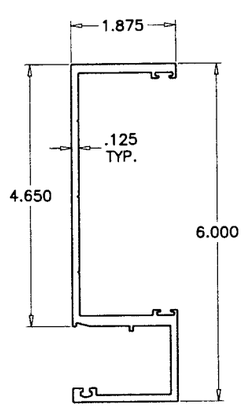

4A ALT. FEMALE MULLION

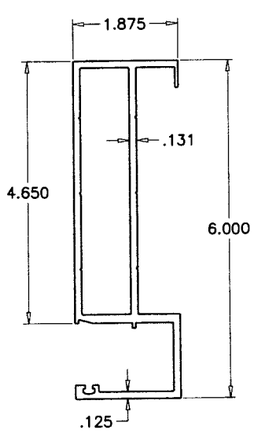

4B ALT. FRAME JAMB

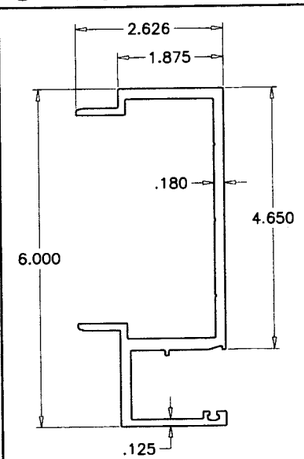

5 MALE MULLION

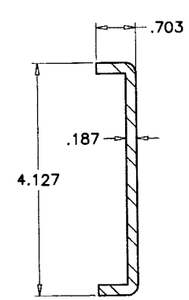

12 REINFORCING CHANNEL

ITEM NO.	PART NUMBER	QUANTITY	DESCRIPTION	MATERIAL	MANF./SUPPLIER/REMARKS
1	FW001S	AS REQD.	FRAME HEAD	6063–T6	–
2	FW002S	AS REQD.	INTERMEDIATE HORIZONTAL	6063–T6	–
3	FW003S	AS REQD.	FRAME SILL	6063–T6	–
4	FW004S	AS REQD.	FRAME JAMB/ FEMALE MULLION	6063–T6	–
4A	FW012S	AS REQD.	ALT. FEMALE MULLION	6063–T6	–
4B	FW013S	AS REQD.	ALT. FRAME JAMB	6063–T6	–
5	FW005S	AS REQD.	MALE MULLION	6063–T6	–
6	FW006S	AS REQD.	INSTALLATION PLATE	6063–T6	–
7	FW007S	AS REQD.	SNAP ON COVER	6063–T5	–
8	FW008S	AS REQD.	GLASS STOP	6063–T5	–
9	FW009S	2/ LITE	GLASS CHAIR, 4" LONG	6063–T5	–
10	FW010S	AS REQD.	POCKET FILLER	6063–T5	–
12	SI	AS REQD.	REINFORCING CHANNEL	STEEL	–
13	NR–G1	AS REQD.	SIDE BLOCKS (TR–1456E)	EPDM	–
14	NR–G2	AS REQD.	W BLOCKS (TR–3508E)	EPDM	–
15	NR–G3	AS REQD.	WEATHER FIN (TR–1311E)	EPDM	–
16	NR–G4	AS REQD.	CUSTOM PRE–SET GASKET (TR–13915E)	EPDM	–
17	NR–G5	AS REQD.	INTERIOR WEDGE GASKET (TR–1507E)	EPDM	–
18	NR–G6	AS REQD.	SETTING BLOCK (1/2" X 9/16" X 4" LONG) (TR–1990E)	EPDM	–
19	NR–G7	AS REQD.	SETTING BLOCK (3/8" X 9/16" X 4" LONG) (TR–1008S)	EPDM	–
20	NR–F1	3/ CORNER	FRAME ASS'Y SCREWS (1/4" X 1–1/2" PHP SELF TAPPING)	ST/ST	–
21	NR–F2	AS REQD.	GLASS STOP SCREWS (1/4" X 3/4" PHP SELF TAPPING)	ST/ST	AT 1" FROM ENDS & 18" O.C.

Engr: DR. HUMAYOUN FAROOQ
STRUCTURES
FLA. PE # 16557
C.A.N. 3538

APR 01 2008

Approved as complying with the Florida Building Code
Date APRIL 24, 2008
NOA# 07-1215.15
Miami Dade Product Control Division
By: Manuel Perez

AL-FAROOQ CORPORATION
ENGINEERS & PRODUCT DEVELOPMENT
1235 S.W. 87 AVE
MIAMI, FLORIDA 33174
TEL. (305) 264-8100 FAX. (305) 262-6978
STORE\W07-77NR

NRAP FIXED WINDOW WALL SYS. SERIES 6000 (S.M.I.)

NR ARCHITECTURAL PRODUCTS
4348 WESTROADS DRIVE
WEST PALM BEACH, FL. 33407
TEL. (561) 844-1121 FAX. (561) 844-6131

revisions:

no	date	by	description
A	03.26.08		NO CHANGE THIS SHEET

date: 08-27-07
scale: 3/8" = 1"
dr. by: HAMID
chk. by:

drawing no. W07-77

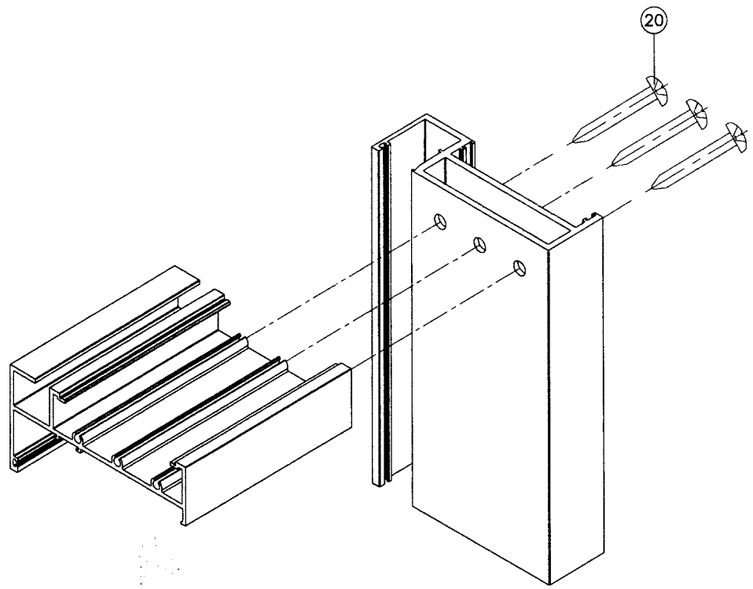

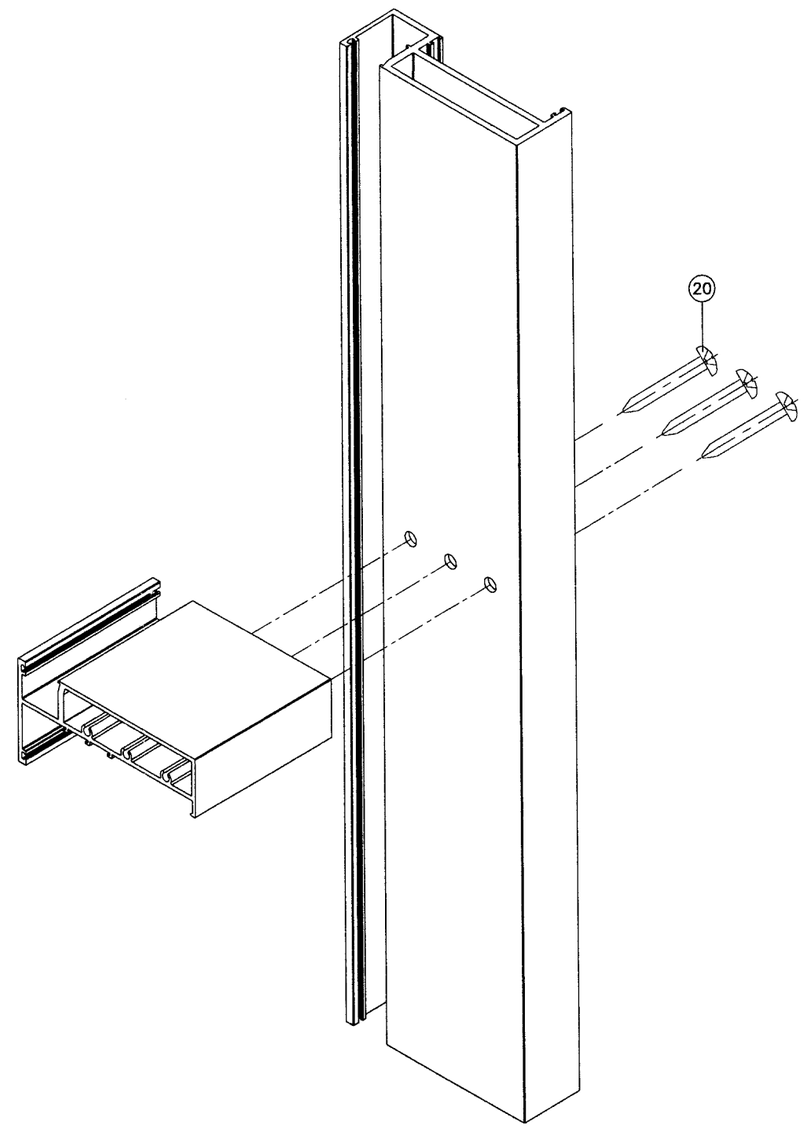

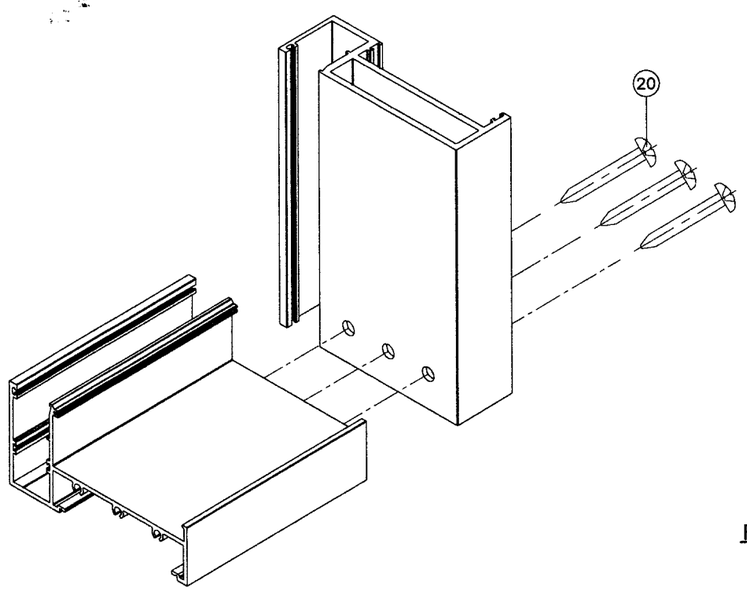

FRAME CORNERS

Engr: DR. HUMAYOUN FAROOQ
STRUCTURES
FLA. PE # 18557
C.A.N. 3538

APR 01 2008

Approved as complying with the
Florida Building Code
Date APRIL 24 2008
NOA# 07-1219.15
Miami Dade Product Control
Division
By Manuel Perez

AL-FAROOQ CORPORATION
ENGINEERS & PRODUCT DEVELOPMENT
1235 S.W. 87 AVE
MIAMI, FLORIDA 33174
TEL. (305) 264-8100 FAX. (305) 262-6978
STORE\W07-77NR

NRAP FIXED WINDOW WALL SYS. SERIES 6000 (S.M.I.)

NR ARCHITECTURAL PRODUCTS
4348 WESTROADS DRIVE
WEST PALM BEACH, FL. 33407
TEL. (561) 844-6131 FAX. (561) 844-6121

revisions:

no	date	by	description
A	03.26.08		NO CHANGE THIS SHEET

date: 08-27-07
scale: 3/8" = 1"
dr. by: HAMID
chk. by:

drawing no.
W07-77

sheet 10 of 10