MIAMI-DADE COUNTY, FLORIDA
METRO-DADE FLAGLER BUILDING

BUILDING CODE COMPLIANCE OFFICE (BCCO)
PRODUCT CONTROL DIVISION

140 WEST FLAGLER STREET, SUITE 1603
MIAMI, FLORIDA 33130-1563
(305) 375-2901 FAX (305) 375-2908
www.buildingcodeonline.com

NOTICE OF ACCEPTANCE (NOA)

Everlast Metal Tile Roof, LLC
P.O. Box 12875
Ft. Pierce, FL. 34981

SCOPE:
This NOA is being issued under the applicable rules and regulations governing the use of construction materials. The documentation submitted has been reviewed by Miami-Dade County Product Control Division and accepted by the Board of Rules and Appeals (BORA) to be used in Miami Dade County and other areas where allowed by the Authority Having Jurisdiction (AHJ).

This NOA shall not be valid after the expiration date stated below. The Miami-Dade County Product Control Division (In Miami Dade County) and/or the AHJ (in areas other than Miami Dade County) reserve the right to have this product or material tested for quality assurance purposes. If this product or material fails to perform in the accepted manner, the manufacturer will incur the expense of such testing and the AHJ may immediately revoke, modify, or suspend the use of such product or material within their jurisdiction. BORA reserves the right to revoke this acceptance, if it is determined by Miami-Dade County Product Control Division that this product or material fails to meet the requirements of the applicable building code.

This product is approved as described herein, and has been designed to comply with the Florida Building Code, including the High Velocity Hurricane Zone of the Florida Building Code.

DESCRIPTION: 5/8" Barrel Step Tile

LABELING: Each unit shall bear a permanent label with the manufacturer's name or logo, city, state and the following statement: "Miami-Dade County Product Control Approved", unless otherwise noted herein.

RENEWAL of this NOA shall be considered after a renewal application has been filed and there has been no change in the applicable building code negatively affecting the performance of this product.

TERMINATION of this NOA will occur after the expiration date or if there has been a revision or change in the materials, use, and/or manufacture of the product or process. Misuse of this NOA as an endorsement of any product, for sales, advertising or any other purposes shall automatically terminate this NOA. Failure to comply with any section of this NOA shall be cause for termination and removal of NOA.

ADVERTISEMENT: The NOA number preceded by the words Miami-Dade County, Florida, and followed by the expiration date may be displayed in advertising literature. If any portion of the NOA is displayed, then it shall be done in its entirety.

INSPECTION: A copy of this entire NOA shall be provided to the user by the manufacturer or its distributors and shall be available for inspection at the job site at the request of the Building Official.

This NOA consists of pages 1 through 7.
The submitted documentation was reviewed by Alex Tigera.

ROOFING SYSTEM APPROVAL:

Category:	Roofing
Sub-Category:	Metal, Panels(Non-Structural)
Material:	Steel
Deck Type:	Wood
Maximum Design Pressure	**-121.75 psf**

TRADE NAMES OF PRODUCTS MANUFACTURED OR LABELED BY APPLICANT:

Product	Dimensions	Test Specifications	Product Description
5/8" Step Barrel Step Tile	l = 40'max w = 38.6"	TAS 110	Flouroceram coated steel, barrel-tile-look roofing panels.
Trim pieces	L=varies W=varies	TAS 110	Flouroceram coated.

EVIDENCE SUBMITTED:

Test Agency	Test Identifier	Test Name/Report	Date
PRI Construction Materials	HTL-015-02-01	TAS 100	09/27/07
Hurricane Test Laboratory, LLC.	0479-0622-07	TAS-125	10/22/07
BASF	Accelerated Weathering	ASTM G 154	12/07/06
BASF	Salt Spray Testing	ASTM B 117	12/07/06

APPROVED ASSEMBLIES

System: A:	5/8" Barrel Tile 26 gauge.
Deck Type:	Wood, Non-insulated
Deck Description:	New Construction or $^{19}/_{32}$" or greater plywood or wood plank or Re-roof 15/32" plywood.
Slope Range:	2":12" or greater
Maximum Uplift Pressure:	**See Maximum Design Pressures Listed Below.**

Deck Attachment: In accordance with applicable building code, but in no case shall it be less than #8 annular ring shank nails at a spacing of 6" o.c. at supports. For re-roof applications, minimum $^{15}/_{32}$" plywood deck panels shall be acceptable and attached to wood trusses using minimum #8 annular ring shank nails at a spacing of 6" o.c. in addition to the existing attachment.

Underlayment: Minimum underlayment shall be an ASTM D 226 Type II installed with a minimum 4" side-lap and 6" end-laps. Underlayment shall be fastened with corrosion resistant tin-caps and 12 gauge 1 ¼" annular ring-shank nails, spaced 6" o.c. at all laps and two staggered rows 12" o.c. in the field of the roll.

Valleys: Valley construction shall be in compliance with Roofing Application Standard RAS 133 and with Everlast Metal Tile Roof, LLC's current published installation instructions.

Fire Barrier Board: Any approved Fire Barrier having a current NOA. Or for class A or B fire rating, install minimum ¼" thick Georgia Pacific "Dens Deck" (with current NOA) or minimum 4mm thick of Tritex, RockRoof (with current NOA) or $^{5}/_{8}$" water resistant type X gypsum sheathing with treated core and facer.

Metal Panels and Accessories: Install the 5/8" Barrel Step Tile and accessories in compliance with Everlast Metal Tile Roof LLC's current, published installation instructions and details. Flashing, penetrations, valley construction and other details shall be constructed in compliance with the minimum requirements provided in Roofing Application Standard RAS 133.

Side laps are secured at each vertical tile step width one #10 metal/wood fastener with self seal washer, of sufficient length to penetrate through the sheathing a minimum of 3/16".

Fasteners shall be a minimum of #10 metal/wood fasteners with self sealing washer, of sufficient length to penetrate through the sheathing a minimum of 3/16", at a spacing not to exceed 12-1/4" o.c. Fasteners shall be place in accordance with fastener detail herein as follows.

Side laps are secured at each vertical tile step width one #10 metal/wood fastener with self seal washer, of sufficient length to penetrate through the sheathing a minimum of 3/16".

Field Condition: See **Profile Drawings Detail A** herein.
Maximum Design Pressure shall be –76.75 psf. (See System Limitation #1)

Perimeter and Corner Condition: See **Profile Drawings Detail B** herein.
Maximum Design Pressure shall be –121.75 psf. (See System Limitation #1)

GENERAL LIMITATIONS:

1 The maximum designed pressure listed herein shall be applicable to all roof pressure zones (i.e. field, perimeters, and corners). Neither rational analysis, nor extrapolation shall be permitted for enhanced fastening at enhanced pressure zones (i.e. perimeters, extended corners and corners).

2. All panels shall be permanently labeled with the manufacturer's name and/or logo, and the following statement: "Miami-Dade County Product Control Approved" **or** with the Miami-Dade County Product Control Seal as seen below. All clips shall be permanently labeled with the manufacturer's name and/or logo, and/or model.

MIAMI-DADE COUNTY
APPROVED

3. Fire classification is not part of this acceptance; refer to a current Approved Roofing Materials Directory for fire ratings of this product.

4. All products listed herein shall have a quality assurance audit in accordance with the Florida Building Code and Rule 9B-72 of the Florida Administrative Code.

PROFILE DRAWINGS
DETAIL A
(SYSTEM A FIELD CONDITION)

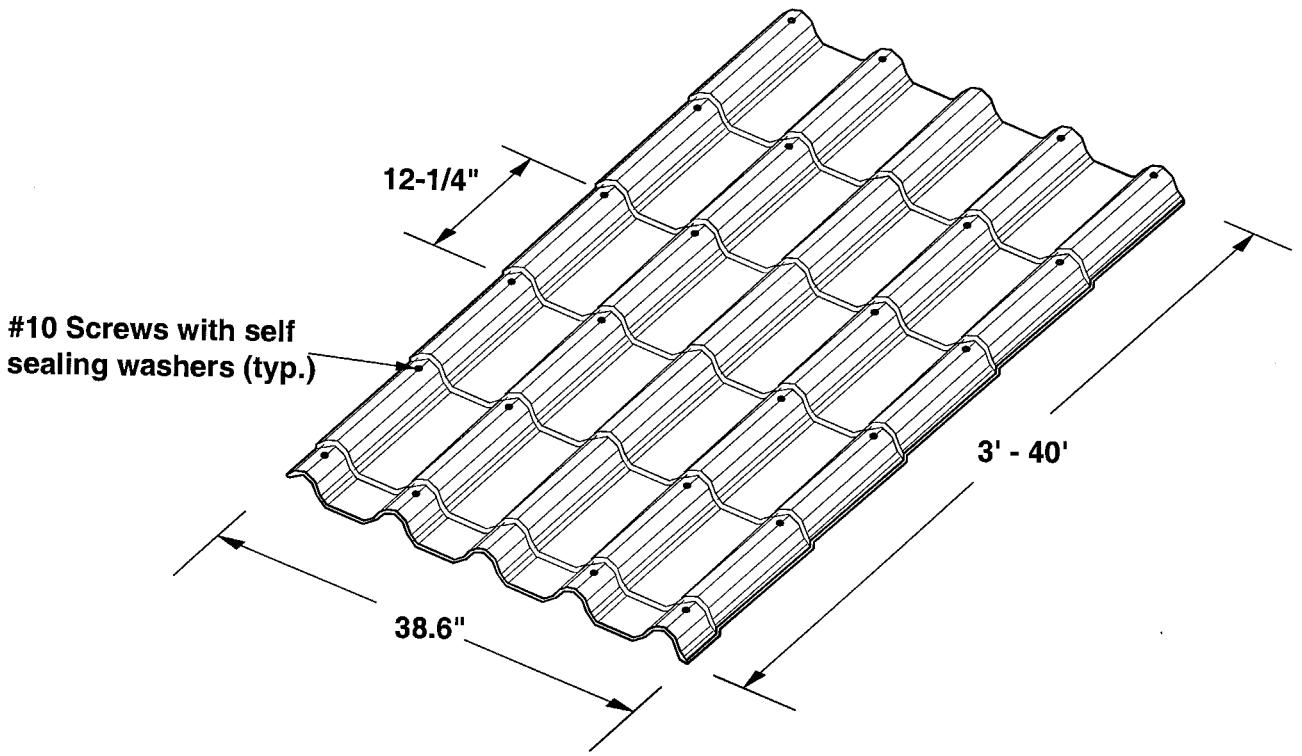

5/8" BARREL STEP TILE

PROFILE DRAWINGS CONT.
DETAIL B
(SYSTEM A PERIMETER AND CORNER CONDITION)

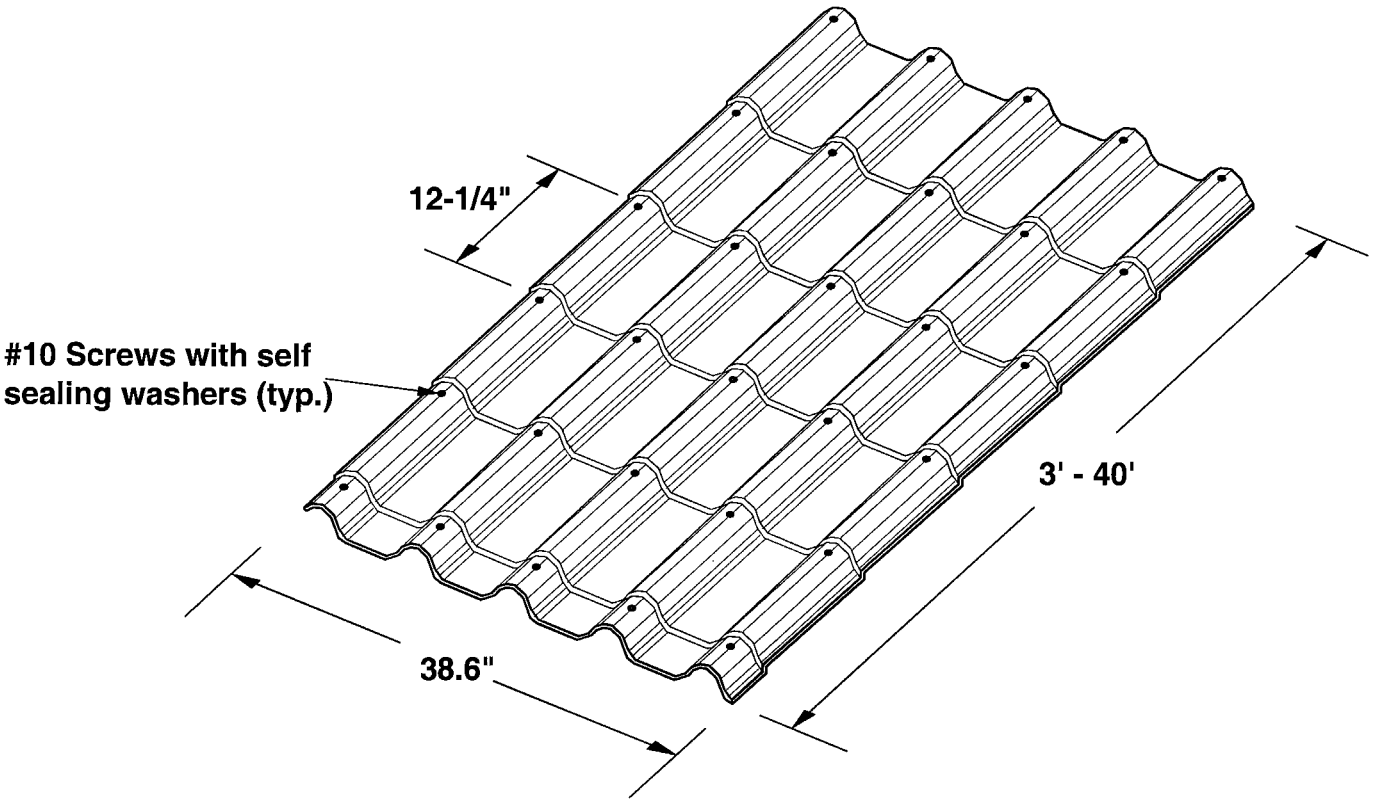

END OF THIS ACCEPTANCE