MIAMI-DADE

BUILDING CODE COMPLIANCE OFFICE (BCCO)
PRODUCT CONTROL DIVISION

MIAMI-DADE COUNTY, FLORIDA
METRO-DADE FLAGLER BUILDING
140 WEST FLAGLER STREET, SUITE 1603
MIAMI, FLORIDA 33130-1563
(305) 375-2901 FAX (305) 375-2908

NOTICE OF ACCEPTANCE (NOA)

Dan's Custom Sheet Metal
5700 Washington Street
Naples, FL 34109

SCOPE:
This NOA is being issued under the applicable rules and regulations governing the use of construction materials. The documentation submitted has been reviewed by the BCCO and accepted by the Building Code and Product Review Committee to be used in Miami Dade County and other areas where allowed by the Authority Having Jurisdiction (AHJ).

This NOA shall not be valid after the expiration date stated below. The BCCO (In Miami Dade County) and/or the AHJ (in areas other than Miami Dade County) reserve the right to have this product or material tested for quality assurance purposes. If this product or material fails to perform in the accepted manner, the manufacturer will incur the expense of such testing and the AHJ may immediately revoke, modify, or suspend the use of such product or material within their jurisdiction. BCCO reserves the right to revoke this acceptance, if it is determined by BCCO that this product or material fails to meet the requirements of the applicable building code.

This product is approved as described herein, and has been designed to comply with the Florida Building Code including the High Velocity Hurricane Zone of the Florida Building Code.

DESCRIPTION: D.C.S.M. VS-150 Standing Seam

LABELING: Each unit shall bear a permanent label with the manufacturer's name or logo, city, state and following statement: "Miami-Dade County Product Control Approved", unless otherwise noted herein.

RENEWAL of this NOA shall be considered after a renewal application has been filed and there has been no change in the applicable building code negatively affecting the performance of this product.

TERMINATION of this NOA will occur after the expiration date or if there has been a revision or change in the materials, use, and/or manufacture of the product or process. Misuse of this NOA as an endorsement of any product, for sales, advertising or any other purposes shall automatically terminate this NOA. Failure to comply with any section of this NOA shall be cause for termination and removal of NOA.

ADVERTISEMENT: The NOA number preceded by the words Miami-Dade County, Florida, and followed by the expiration date may be displayed in advertising literature. If any portion of the NOA is displayed, then it shall be done in its entirety.

INSPECTION: A copy of this entire NOA shall be provided to the user by the manufacturer or its distributors and shall be available for inspection at the job site at the request of the Building Official.

This renews NOA #07-0925.01 and consists of pages 1 through 9.
The submitted documentation was reviewed by Alex Tigera.

ROOFING SYSTEM APPROVAL:

Category:	Roofing
Sub-Category:	Metal, Panels(Non-Structural)
Material:	Steel
Deck Type:	Wood
Maximum Design Pressure:	See Table A herein.

TRADE NAMES OF PRODUCTS MANUFACTURED OR LABELED BY APPLICANT:

Product	Dimensions	Test Specifications	Product Description
D.C.S.M. VS 150	l = varies w = 16" h = 1-½" min. 0.0239" thick (60.7 ksi min. yield)	TAS 100	Corrosion resistant, Kynar 500 coated Galvalume metal panels.
VS SS Clips	3" wide 1" long 1-¼ " min. 0.0239" thick	TAS 100	Galvalume coated steel
Trim Pieces	l = varies w = varies min. 24 ga.	TAS 100	Standard flashing and trim pieces. Manufactured for each panel width.

TRADE NAMES OF PRODUCTS MANUFACTURED BY OTHERS:

Product	Dimensions	Product Description	Manufacturer
1500 SNS Fixed Panel Clips	3-3/4" wide 2" long H = 1-1/2" Min. 0.048" thick	G90 Galvalume coated steel clips.	Metalforming, Inc.
Fasteners (Panel)	min. #10 FH deck screw.	Corrosion resistant, flat head, self-drilling screws	generic

EVIDENCE SUBMITTED:

Test Agency	Test Identifier	Test Name/Report	Date
Valspar Corporation		ASTM G 23 ASTM B 117	
PRI Asphalt Technologies, Inc.	DCSM-002-02-01	TAS 100	6/28/02
Hurricane Test Laboratory, Inc.	0302-0803-02 0302-0621-05	TAS 125 TAS 125	08/08/02 07/01/05
Force Engineering and Testing, Inc.	72-0108T-07A-D	TAS 125	03/28/07

APPROVED SYSTEMS:

SYSTEM A:	D.C.S.M. VS 150 Roof Panel
Deck Type:	Wood, Non-insulated
Deck Description:	New Construction or Re-roof $^{19}/_{32}$" or greater plywood or wood plank.
Slope Range:	2":12" or greater
Maximum Uplift Pressure:	**-67.5psf (See System Limitation #1)**

Deck Attachment: In accordance with applicable Building Code, but in no case shall it be less than 8d annular ring shank nails spaced 6" o.c. In reroofing, where the deck is less than $^{19}/_{32}$" thick (Minimum $^{15}/_{32}$") The above attachment method must be in addition to existing attachment.

Underlayment: Minimum underlayment shall be an ASTM D 226 Type II installed with a minimum 4" side-lap and 6" end-laps. Underlayment shall be fastened with corrosion resistant tin-caps and 12 gauge 1 ¼" annular ring-shank nails, spaced 6" o.c. at all laps and two staggered rows 12" o.c. in the field of the roll. Or, any approved underlayment having a current NOA.

Valleys: Valley construction shall be in compliance with Roofing Application Standard RAS 133 and with Dan's Custom Sheet Metal, Inc.' current published installation instructions.

Fire Barrier Board: Any approved fire barrier having a current NOA, or for class A or B fire rating, install minimum ¼" thick Georgia Pacific "Dens Deck" (with current NOA) or minimum 4mm thick of Tritex, RockRoof (with current NOA) or $^{5}/_{8}$" water resistant type X gypsum sheathing with treated core and facer.

Metal Panels and Accessories: Install the "D.C.S.M. VS 150 Roof Panels" and accessories in compliance with Dan's Custom Sheet Metal, Inc' current, published installation instructions and details. Flashing, penetrations, valley construction and other details shall be constructed in compliance with the minimum requirements provided in Roofing Application Standards RAS 133. Panels shall be attached as follows:

1. At the eave, rake, and ridge, clips shall be located not more than **3"** away from the panel end.
2. Panels shall be installed with approved VS SS Clips, attached to substrate with two corrosion resistant #10 FH deck screw of sufficient length to penetrate through the sheathing a minimum of $^{3}/_{16}$", at a spacing of 16" o.c. parallel to the roof slope.

SYSTEM A-2:	D.C.S.M. VS 150 Roof Panel
Deck Type:	Wood, Non-insulated
Deck Description:	New Construction or Re-roof $^{19}/_{32}$" or greater plywood or wood plank.
Slope Range:	2":12" or greater
Maximum Uplift Pressure:	**-76.75psf (See System Limitation #1)**

Deck Attachment: In accordance with applicable Building Code, but in no case shall it be less than 8d annular ring shank nails spaced 6" o.c. In reroofing, where the deck is less than $^{19}/_{32}$" thick (Minimum $^{15}/_{32}$") The above attachment method must be in addition to existing attachment.

Underlayment: Minimum underlayment shall be an ASTM D 226 Type II installed with a minimum 4" side-lap and 6" end-laps. Underlayment shall be fastened with corrosion resistant tin-caps and 12 gauge 1 ¼" annular ring-shank nails, spaced 6" o.c. at all laps and two staggered rows 12" o.c. in the field of the roll. Or, any approved underlayment having a current NOA.

Valleys: Valley construction shall be in compliance with Roofing Application Standard RAS 133 and with Dan's Custom Sheet Metal, Inc.' current published installation instructions.

Fire Barrier Board: Any approved fire barrier having a current NOA, or for class A or B fire rating, install minimum ¼" thick Georgia Pacific "Dens Deck" (with current NOA) or minimum 4mm thick of Tritex, RockRoof (with current NOA) or $^{5}/_{8}$" water resistant type X gypsum sheathing with treated core and facer.

Metal Panels and Accessories: Install the "D.C.S.M. VS 150 Roof Panels" and accessories in compliance with Dan's Custom Sheet Metal, Inc' current, published installation instructions and details. Flashing, penetrations, valley construction and other details shall be constructed in compliance with the minimum requirements provided in Roofing Application Standards RAS 133. Panels shall be attached as follows:

1. At the eave, rake, and ridge, clips shall be located not more than **2"** away from the panel end.
2. Panels shall be installed with approved VS SS Clips, attached to substrate with two corrosion resistant #10 FH deck screw of sufficient length to penetrate through the sheathing a minimum of $^{3}/_{16}$", at a spacing of 16" o.c. parallel to the roof slope.

SYSTEM B-1:	D.C.S.M. VS 150 Roof Panel
Deck Type:	Wood, Non-insulated
Deck Description:	New Construction or Re-roof $^{15}/_{32}$" or greater plywood or wood plank.
Slope Range:	2":12" or greater
Maximum Uplift Pressure:	**See Table 'A' Below**

Deck Attachment: In accordance with applicable Building Code, but in no case shall it be less than 8d annular ring shank nails spaced 6" o.c. In reroofing, where the deck is less than $^{19}/_{32}$" thick (Minimum $^{15}/_{32}$") The above attachment method must be in addition to existing attachment.

Underlayment: Minimum underlayment shall be an ASTM D 226 Type II installed with a minimum 4" side-lap and 6" end-laps. Underlayment shall be fastened with corrosion resistant tin-caps and 12 gauge 1 ¼" annular ring-shank nails, spaced 6" o.c. at all laps and two staggered rows 12" o.c. in the field of the roll. Or, any approved underlayment having a current NOA.

Valleys: Valley construction shall be in compliance with Roofing Application Standard RAS 133 and with Dan's Custom Sheet Metal, Inc.' current published installation instructions.

Fire Barrier Board: Any approved fire barrier having a current NOA, or for class A or B fire rating, install minimum ¼" thick Georgia Pacific "Dens Deck" (with current NOA) or minimum 4mm thick of Tritex, RockRoof (with current NOA) or $^{5}/_{8}$" water resistant type X gypsum sheathing with treated core and facer.

Metal Panels and Accessories: Install the "D.C.S.M. VS 150 Roof Panels" and accessories in compliance with Dan's Custom Sheet Metal, Inc' current, published installation instructions and details. Flashing, penetrations, valley construction and other details shall be constructed in compliance with the minimum requirements provided in Roofing Application Standards RAS 133. Panels shall be attached as follows:

1. At the eave, rake, and ridge, clips shall be located not more than 3" away from the panel end.
2. Panels shall be installed with approved 1500SNS Clips, attached to substrate with two corrosion resistant #12 screws of sufficient length to penetrate through the sheathing a minimum of $^{3}/_{16}$", at a maximum spacing as noted below in Table 'A' parallel to the roof slope.
3. Panel ribs shall be fully engaged to form an integral snap-lock.

TABLE A
MAXIMUM DESIGN PRESSURES

Roof Areas	Maximum Design Pressures	Maximum Fastener Spacing
Field	-86 psf	24" o.c.
Perimeter and Corner[1]	-108.5 psf	12" o.c.
Perimeter and Corner[1]	-116 psf	6" o.c.

SYSTEM LIMITATIONS:

1. The maximum designed pressure listed herein shall be applicable to all roof pressure zones (i.e. field, perimeters, and corners). Neither rational analysis, nor extrapolation shall be permitted for enhanced fastening at enhanced pressure zones (i.e. perimeters, extended corners and corners).

2. All panels shall be permanently labeled with the manufacturer's name and/or logo, and the following statement: "Miami-Dade County Product Control Approved" **or** with the Miami-Dade County Product Control Seal as seen below. All clips shall be permanently labeled with the manufacturer's name and/or logo, and/or model.

3. Fire classification is not part of this acceptance; refer to a current Approved Roofing Materials Directory for fire ratings of this product.

4. All products listed herein shall have a quality assurance audit in accordance with the Florida Building Code and Rule 9B-72 of the Florida Administrative Code.

PROFILE DRAWINGS:

D.C.S.M. VS 150 METAL ROOF PANEL

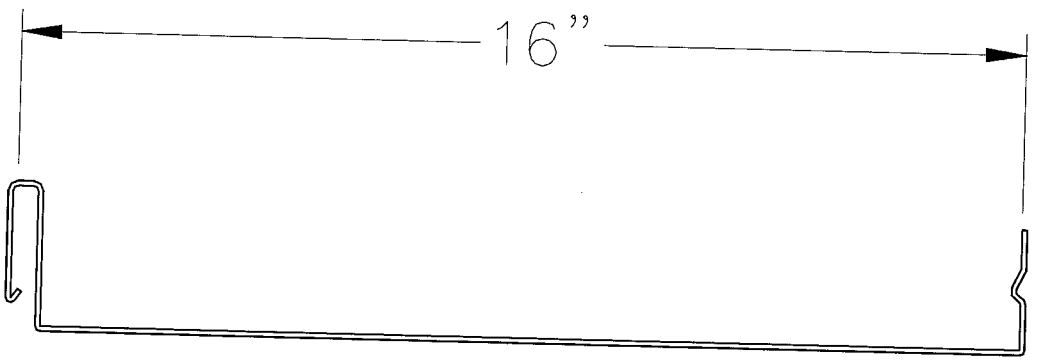

PROFILE DRAWINGS (CONT.)

D.C.S.M. VS SS CLIPS

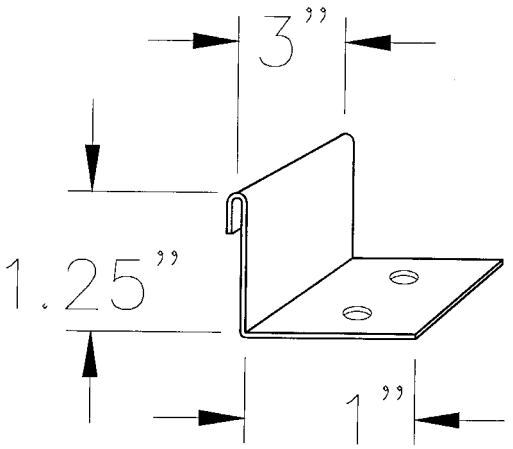

SYSTEMS A-1 AND A-2

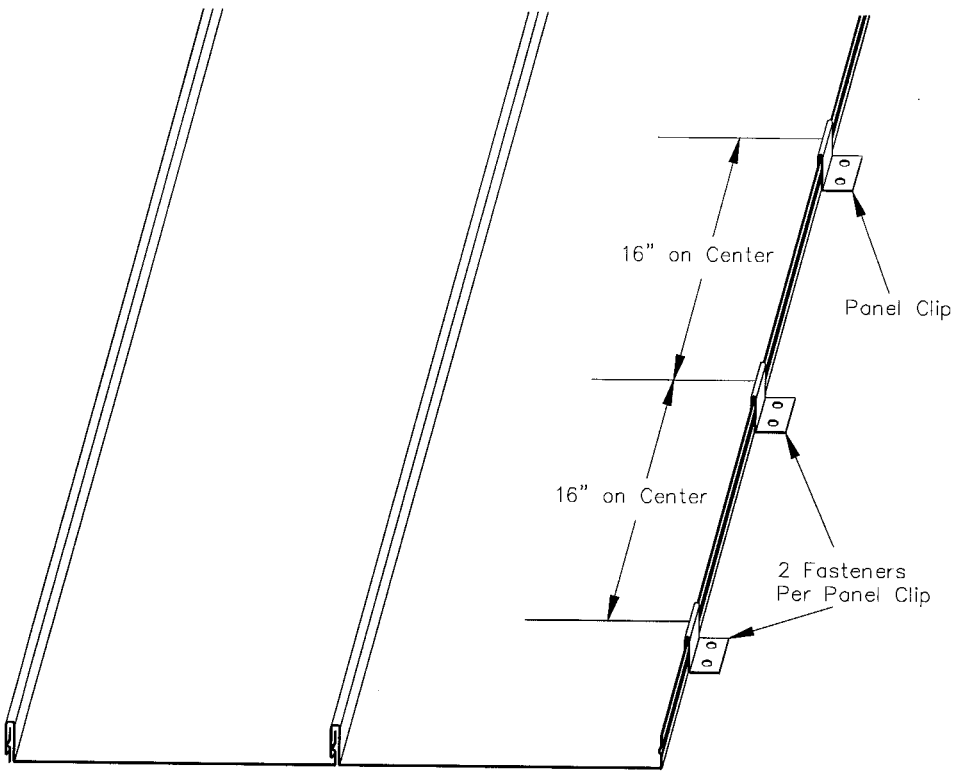

PROFILE DRAWINGS (CONT.)

1500SNS CLIPS

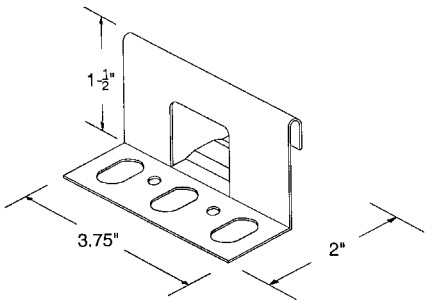

SYSTEM B-1

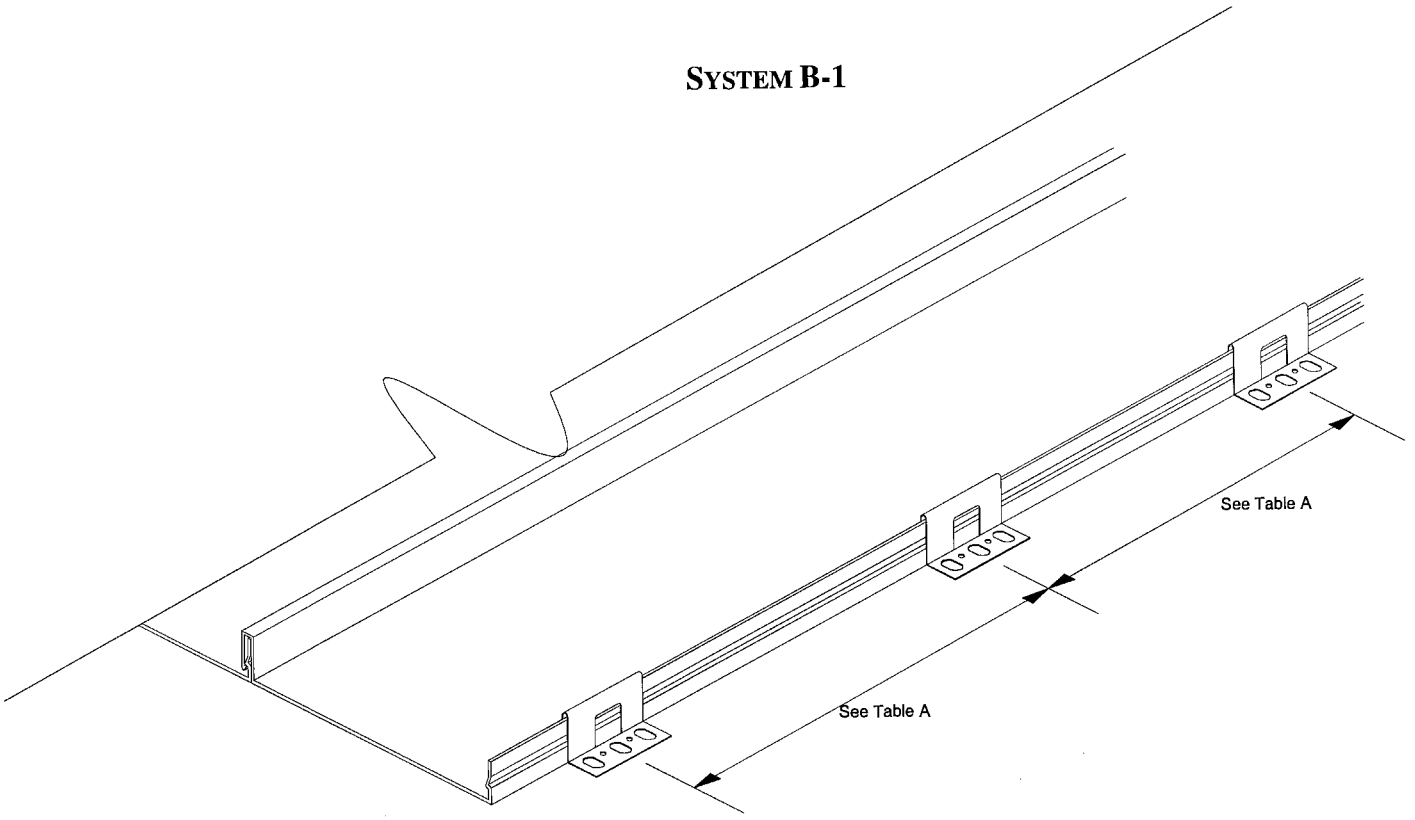

END OF THIS ACCEPTANCE

MIAMI-DADE COUNTY APPROVED