MIAMI-DADE COUNTY
BUILDING CODE COMPLIANCE OFFICE (BCCO)
PRODUCT CONTROL DIVISION

MIAMI-DADE COUNTY, FLORIDA
METRO-DADE FLAGLER BUILDING
140 WEST FLAGLER STREET, SUITE 1603
MIAMI, FLORIDA 33130-1563
(305) 375-2901 FAX (305) 372-6339
www.miamidade.gov/buldingcode

# NOTICE OF ACCEPTANCE (NOA)

**Birdview Skylights**
**201 Longhorn Road**
**Ft. Worth, TX 76179**

**SCOPE:**
This NOA is being issued under the applicable rules and regulations governing the use of construction materials. The documentation submitted has been reviewed by Miami-Dade County Product Control Division and accepted by the Board of Rules and Appeals (BORA) to be used in Miami Dade County and other areas where allowed by the Authority Having Jurisdiction (AHJ).
This NOA shall not be valid after the expiration date stated below. The Miami-Dade County Product Control Division (In Miami Dade County) and/or the AHJ (in areas other than Miami Dade County) reserve the right to have this product or material tested for quality assurance purposes. If this product or material fails to perform in the accepted manner, the manufacturer will incur the expense of such testing and the AHJ may immediately revoke, modify, or suspend the use of such product or material within their jurisdiction. BORA reserves the right to revoke this acceptance, if it is determined by Miami-Dade County Product Control Division that this product or material fails to meet the requirements of the applicable building code.
This product is approved as described herein, and has been designed to comply with the Florida Building Code, including the High Velocity Hurricane Zone.
**DESCRIPTION: CMDADE Skylight**
**APPROVAL DOCUMENT:** Drawing No. CMDADE, titled "Birdview Skylights", prepared by Birdview Skylights., sheet 1 of 1, dated 06/28/99, with no revision, signed and sealed by Scott Wolters, P.E., bearing the Miami-Dade County Product Control revision stamp with the Notice of Acceptance number and expiration date by the Miami-Dade County Product Control Division.
**MISSILE IMPACT RATING: Large and Small Missile Impact Resistant**
**LABELING:** Each unit shall bear a permanent label with the manufacturer's name or logo, city, state and the following statement: "Miami-Dade County Product Control Approved or MDCPCA", unless otherwise noted herein.
**RENEWAL** of this NOA shall be considered after a renewal application has been filed and there has been no change in the applicable building code negatively affecting the performance of this product.
**TERMINATION** of this NOA will occur after the expiration date or if there has been a revision or change in the materials, use, and/or manufacture of the product or process. Misuse of this NOA as an endorsement of any product, for sales, advertising or any other purposes shall automatically terminate this NOA. Failure to comply with any section of this NOA shall be cause for termination and removal of NOA.
**ADVERTISEMENT:** The NOA number preceded by the words Miami-Dade County, Florida, and followed by the expiration date may be displayed in advertising literature. If any portion of the NOA is displayed, then it shall be done in its entirety.
**INSPECTION:** A copy of this entire NOA shall be provided to the user by the manufacturer or its distributors and shall be available for inspection at the job site at the request of the Building Official.
**This NOA revises and renews NOA # 02-0924.07** and consists of this page 1, evidence page E-1, as well as approval document mentioned above.
The submitted documentation was reviewed by **Carlos M. Utrera, P.E.**

MIAMI-DADE COUNTY APPROVED

1/28/08

**NOA No 08-0117.02**
**Expiration Date: January 7, 2013**
**Approval Date: February 21, 2008**

## NOTICE OF ACCEPTANCE: EVIDENCE SUBMITTED

**A. DRAWING**

1. Drawing No. CMDADE, titled "Birdview Skylights", prepared by Birdview Skylights., sheet 1 of 1, dated 06/28/99, with no revision, signed and sealed by Scott Wolters, P.E.

**B. TEST**

1. Test reports on 1) Air Infiltration Test, per FBC, TAS 202-94
   2) Uniform Static Air Pressure Test, Loading per FBC TAS 202-94
   3) Water Resistance Test, per FBC, TAS 202-94
   4) Large Missile Impact Test per FBC, TAS 201-94
   5) Cyclic Wind Pressure Loading per FBC, TAS 203-94

   along with marked-up drawings and installation of the Birdview Skylights, prepared by Hurricane Test Laboratory, LLC, and Test Report No. T180-0702-07, dated 08/22/07, signed and sealed by Vinu J. Abraham, P.E.

**C. CALCULATIONS**

1. Anchor calculations prepared by Wolters Engineering, Inc. dated 12/18/07, signed and sealed by Scott Wolters, P.E.

**D. QUALITY ASSURANCE**

1. Miami Dade Building Code Compliance Office (BCCO).

**E. MATERIAL CERTIFICATION**

1. None.

**F. STATEMENTS**

1. Test Compliance and no financial interest statement issued by Hurricane Test Laboratory, LLC, dated 08/22/07, signed and sealed by Vinu J. Abraham, P.E.
2. Code compliance letter issued by Wolters Engineering, Inc. dated 01/04/08, signed and sealed by Scott Wolters, P.E.
3. No financial interest letter issued by Wolters Engineering, Inc. dated 01/04/08, signed and sealed by Scott Wolters, P.E.

1/28/08

**Carlos M. Utrera, P.E.**
**Product Control Examiner**
**NOA No: 08-0117.02**
**Expiration Date: January 7, 2013**
**Approval Date: February 21, 2008**

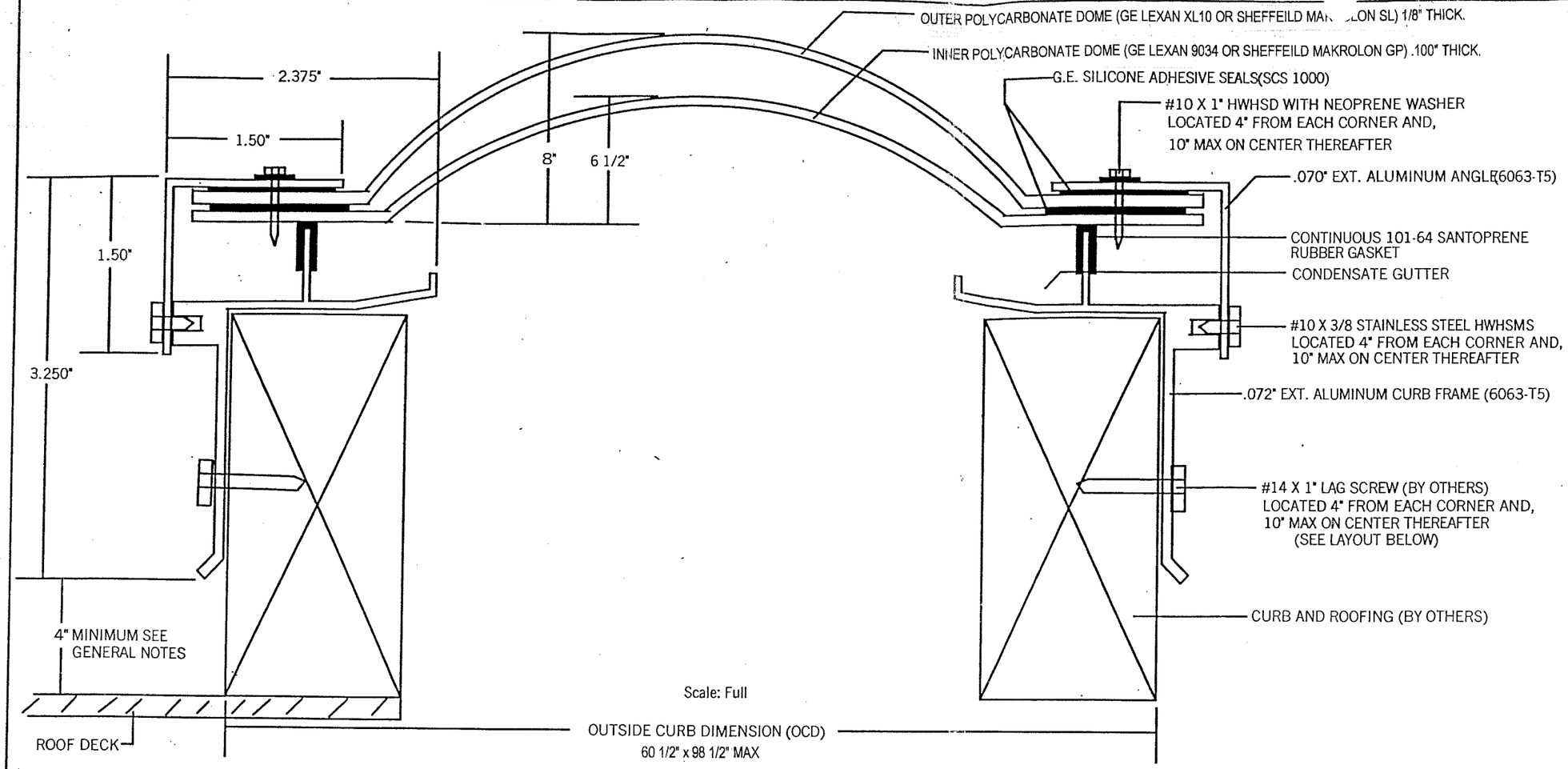


Scale: Full

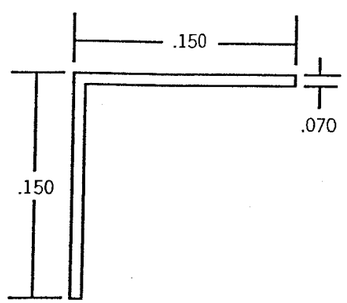


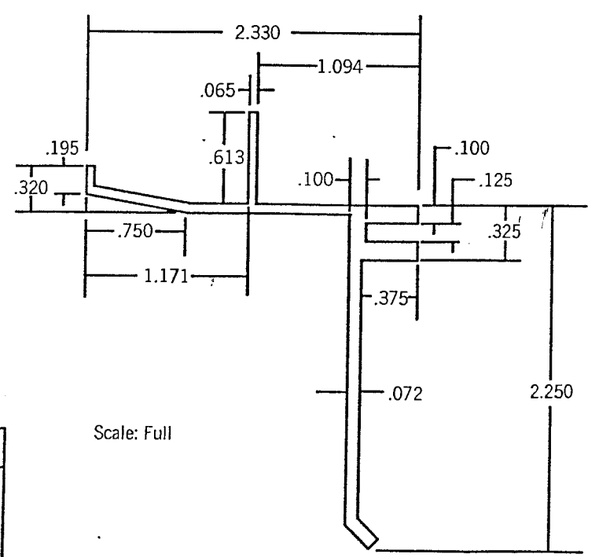


Scale: Full

**NOTE:**

All aluminum shall be 6063 T5 alloy fully mitered and heliarc welded at corners.

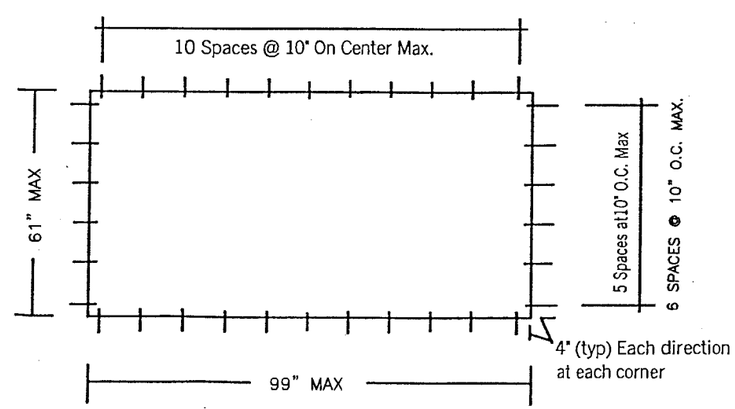


Fastener Layout

Scale: N/A


BIRD VIEW SKYLIGHTS
THE CLEAR CHOICE
201LONGHORN RD. FT. WORTH TX. 76179
Ph. 817-439-9266 Fx. 817-232-8468


| | | |
|---|---|---|
| DRAWING# | CMDADE | SHEET 1 OF 1 |
| DRAWN BY: | E. BIRD | |
| DATE: 6 - 28 - 99 | SCALE: FULL and NOTED | |

DESIGN PRESSURES

Positive +60 psf Negative -100 psf

LARGE MISSILE IMPACT RESISTANT


SCOTT WOLTERS
FL PE# 62354

WOLTERS ENGINEERING
(COA# 27194)
322 BUCHANAN #609
HOLLYWOOD, FL 33019
PH/FAX:(954) 921-5828


12-18-07

GENERAL NOTES

1. 4" CLEAR MINIMUM REQUIRMENT FOR SHINGLE & BUR WITHOUT INSULATION FOR INSULATION AND TILES ADD THE INSULATION THICKNESS AND THE TILE HEIGHT TO 4".
2. WEEP HOLES ARE NOT REQUIRED
3. THE CURB (BY OTHERS) SHALL BE PROPERLY DESIGNED AND ANCHORED TO THE STRUCTURE AND / ON TRUSSES

08-0117.02
01/07/2013