MIAMI-DADE

BUILDING CODE COMPLIANCE OFFICE (BCCO)
PRODUCT CONTROL DIVISION

MIAMI-DADE COUNTY, FLORIDA
METRO-DADE FLAGLER BUILDING
140 WEST FLAGLER STREET, SUITE 1603
MIAMI, FLORIDA 33130-1563
(305) 375-2901 FAX (305) 375-2908

NOTICE OF ACCEPTANCE (NOA)

Owens Corning
One Owens Corning Parkway
Toledo, OH 43659

SCOPE:
This NOA is being issued under the applicable rules and regulations governing the use of construction materials. The documentation submitted has been reviewed by the BCCO and accepted by the Building Code and Product Review Committee to be used in Miami Dade County and other areas where allowed by the Authority Having Jurisdiction (AHJ).

This NOA shall not be valid after the expiration date stated below. The BCCO (In Miami Dade County) and/or the AHJ (in areas other than Miami Dade County) reserve the right to have this product or material tested for quality assurance purposes. If this product or material fails to perform in the accepted manner, the manufacturer will incur the expense of such testing and the AHJ may immediately revoke, modify, or suspend the use of such product or material within their jurisdiction. BCCO reserves the right to revoke this acceptance, if it is determined by BCCO that this product or material fails to meet the requirements of the applicable building code.

This product is approved as described herein, and has been designed to comply with the Florida Building Code, including the High Velocity Hurricane Zone of the Florida Building Code.

DESCRIPTION: Oakridge PRO 40 AR, Oakridge PRO 50 AR, and Duration Premium

LABELING: Each unit shall bear a permanent label with the manufacturer's name or logo, city, state and following statement: "Miami-Dade County Product Control Approved", unless otherwise noted herein.

RENEWAL of this NOA shall be considered after a renewal application has been filed and there has been no change in the applicable building code negatively affecting the performance of this product.

TERMINATION of this NOA will occur after the expiration date or if there has been a revision or change in the materials, use, and/or manufacture of the product or process. Misuse of this NOA as an endorsement of any product, for sales, advertising or any other purposes shall automatically terminate this NOA. Failure to comply with any section of this NOA shall be cause for termination and removal of NOA.

ADVERTISEMENT: The NOA number preceded by the words Miami-Dade County, Florida, and followed by the expiration date may be displayed in advertising literature. If any portion of the NOA is displayed, then it shall be done in its entirety.

INSPECTION: A copy of this entire NOA shall be provided to the user by the manufacturer or its distributors and shall be available for inspection at the job site at the request of the Building Official.

This NOA revises NOA #07-0306.04 and consists of pages 1 through 6.
The submitted documentation was reviewed by Alex Tigera.

MIAMI-DADE COUNTY APPROVED

ROOFING ASSEMBLY APPROVAL

Category: Roofing
Sub-Category: 07310 Asphalt Shingles
Materials Laminate
Deck Type: Wood

1. SCOPE

This revises a roofing system using **Owens Corning Oakridge PRO 40 AR, Oakridge PRO 50 AR, and Duration Premium.** Asphalt shingles manufactured by Owens Corning as described in Section 2 of his Notice of Acceptance.

2. PRODUCT DESCRIPTION

Product	Dimensions	Test Specifications	Product Description
Oakridge PRO 40 AR	13 ¼" x 39 $^3/_8$"	TAS 110	A heavy weight, fiberglass reinforced four tab asphalt shingle.
Oakridge PRO 50 AR	13 ¼" x 39 $^3/_8$"	TAS 110	A heavy weight, fiberglass reinforced four tab asphalt shingle.
Duration Premium	13 ¼" x 39 $^3/_8$"	TAS 110	A heavy weight, fiberglass reinforced four tab asphalt shingle with large nail area.
Accessory Shingles	various	proprietary	Accessory shingles for hip, ridge and starter strip applications.

3. EVIDENCE SUBMITTED:

Test Agency	Test Identifier	Test Name/Report	Date
Celotex Corp. Testing Service	258495B	TAS 100	06/01/98
PRI Asphalt Technologies, Inc.	OCF-069-02-01	TAS 100	08/21/03
	OCF-102-02-01	TAS 100	11/12/07
	OCF-071-02-01	TAS 100	08/22/03
	OCF-096-02-01	TAS-100	11/30/06
	OCF-097-02-01	TAS-100	11/30/06
	OCF-075-02-01	TAS 100	03/01/04
	OCF-083-02-01	TAS 100	09/24/04
Underwriters Laboratories, Inc.	94NK9632	TAS 107	07/01/98
	07CA39536	TAS 107	11/11/07
	03NK04954	TAS 107	03/28/03
	03NK04954	TAS 107	03/11/03
	03NK21814	TAS 107	08/28/03
	05CA38930	TAS 107	10/24/05
	04NK06517	TAS 107	05/04/04
	03NK0495	UL 997	03/06/03
	03NK33481	TAS 107	12/02/03
	06CA41119	TAS 107	12/07/06

96NK30503	ASTM E 108	10/11/96
07CA39536	ASTM D 3462	12/14/07
07CA02026	ASTM D 3462	01/26/07
98NK16342	ASTM D 3462	05/14/98
98NK24243	ASTM D 3462	09/03/98
00NK14644	ASTM D 3462	01/29/01
02NK02878	ASTM D 3462	10/15/03
02NK02878	ASTM D 3462	10/20/03
98NK38907	ASTM D 3462	12/14/98

4. LIMITATIONS

4.1 Fire classification is not part of this acceptance; refer to a current Approved Roofing Materials Directory for fire ratings of this product.

4.2 Shall not be installed on roof mean heights in excess of 33 ft.

4.3 All products listed herein shall have a quality assurance audit in accordance with the Florida Building Code and Rule 9B-72 of the Florida Administrative Code.

5. INSTALLATION

5.1 Shingles shall be installed in compliance with Roofing Application Standard RAS 115.

5.2 Flashing shall be in accordance with Roofing Application Standard RAS 115

5.3 The manufacturer shall provide clearly written application instructions.

5.4 Exposure and course layout shall be in compliance with Detail 'A', attached.

5.5 Nailing shall be in compliance with Detail 'B' and Detail 'C', attached.

6. LABELING

6.1 Shingles shall be labeled with the Miami-Dade Seal as seen below, or the wording "Miami-Dade County Product Control Approved".

MIAMI-DADE COUNTY
APPROVED

7. BUILDING PERMIT REQUIREMENTS

7.1 Application for building permit shall be accompanied by copies of the following:

7.1.1 This Notice of Acceptance.

7.1.2 Any other documents required by the Building Official or the applicable code in order to properly evaluate the installation of this system.

8. MANUFACTURING PLANTS

Oakridge PRO 40 AR	Oakridge PRO 50 AR	Duration Premium
Savannah, GA	Savannah, GA	Savannah, GA
Medina, OH	Medina, OH	Jacksonville, FL
Jacksonville, FL	Jacksonville, FL	Irving, TX
Houston, TX	Houston, TX	
Denver, CO	Denver, CO	
Portland, OR	Portland, OR	
Irving, TX		

DETAIL A

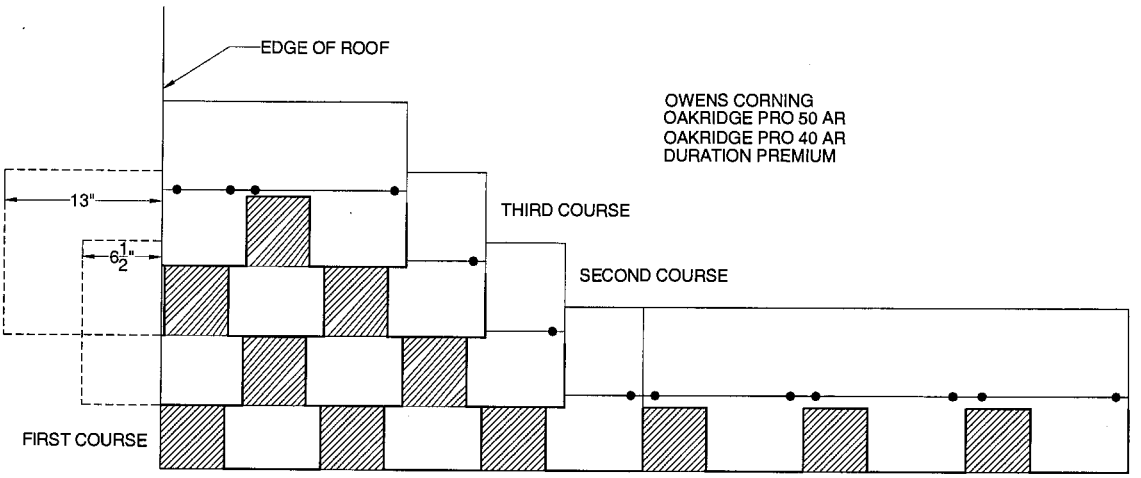

DETAIL B

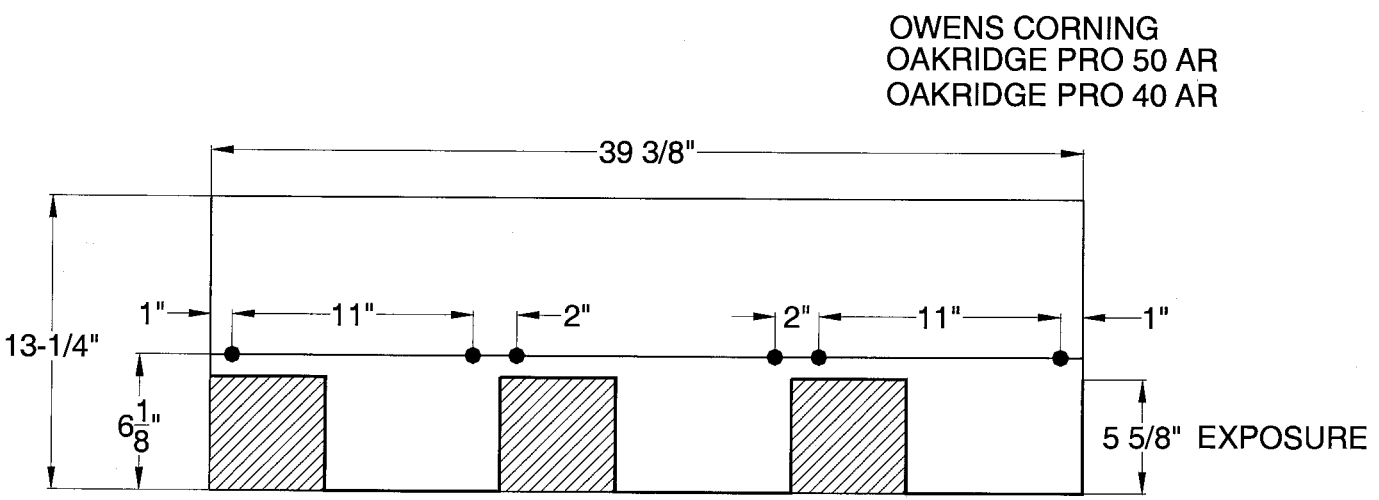

DETAIL C
DURATION PREMIUM

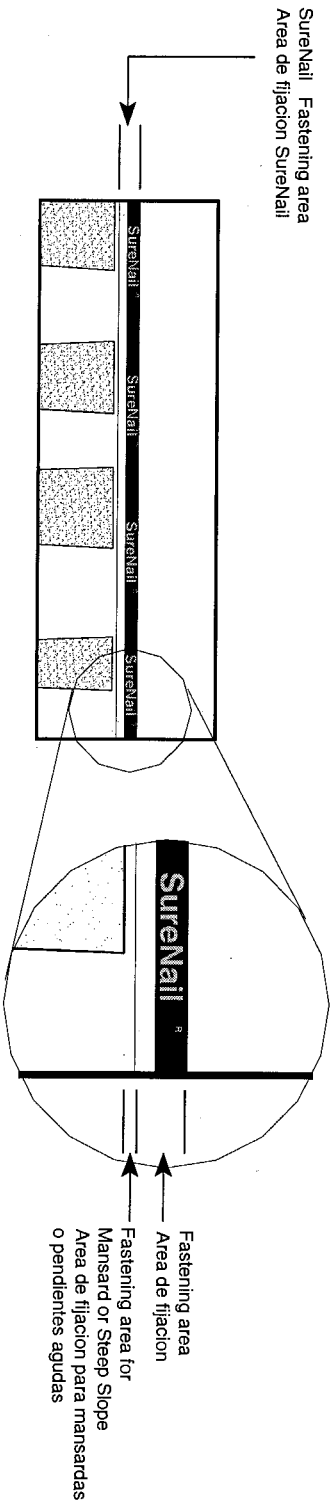

SureNail fastening area width
Area de clavos SureNail

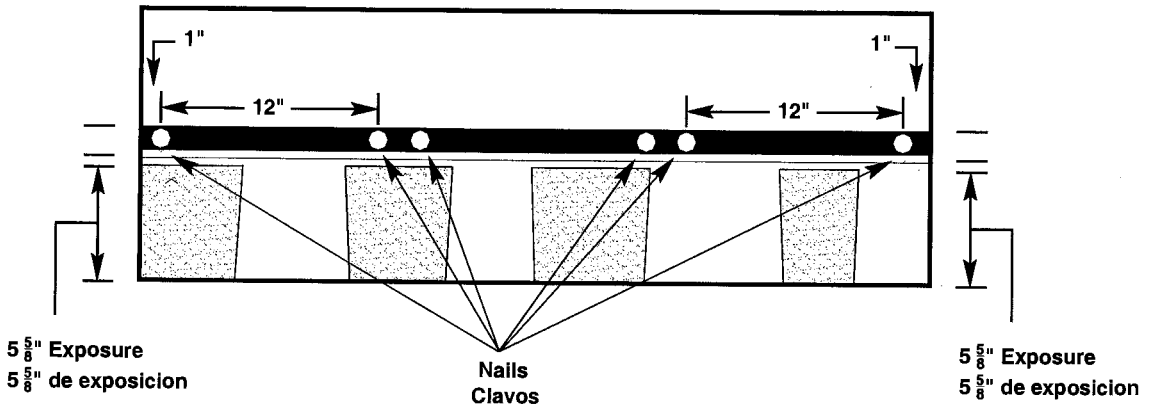

MAXIMUM SLOPE 21:12

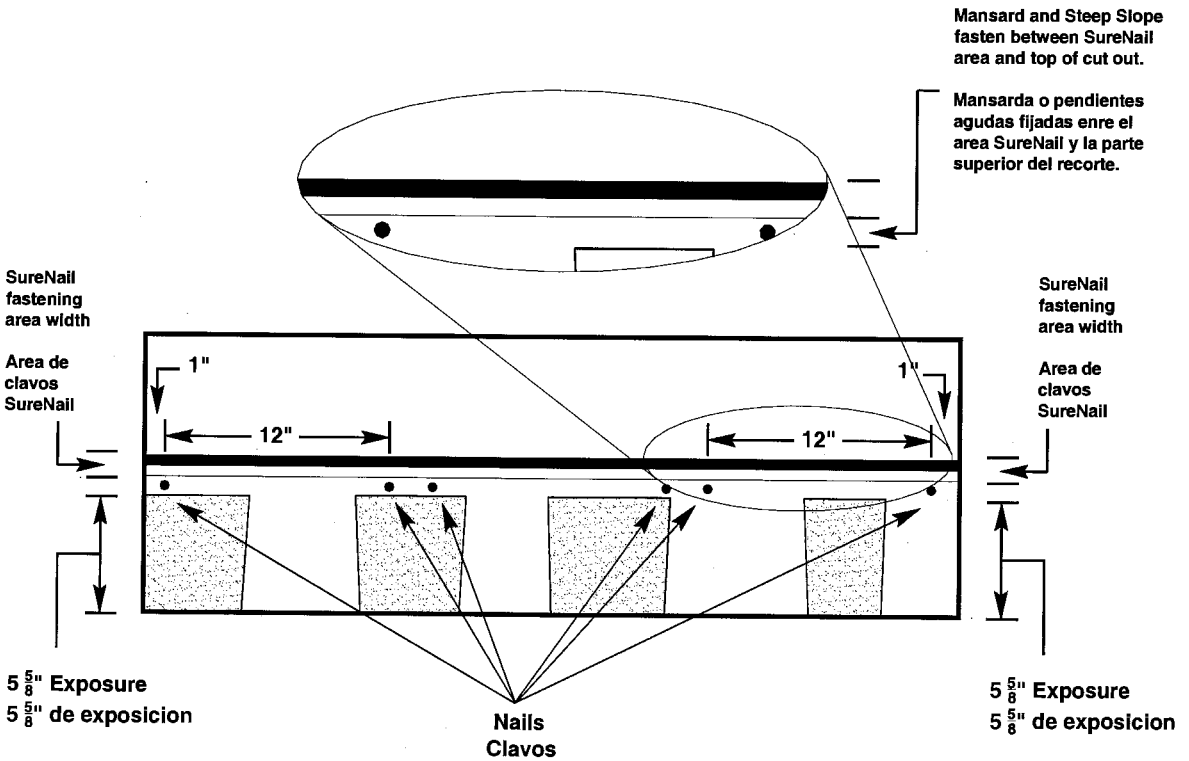

ON SLOPES EXCEEDING 21:12

END OF THIS ACCEPTANCE