MIAMI-DADE COUNTY
BUILDING CODE COMPLIANCE OFFICE (BCCO)
PRODUCT CONTROL DIVISION

MIAMI-DADE COUNTY, FLORIDA
METRO-DADE FLAGLER BUILDING
140 WEST FLAGLER STREET, SUITE 1603
MIAMI, FLORIDA 33130-1563
(305) 375-2901 FAX (305) 375-2908
www.buildingcodeonline.com

NOTICE OF ACCEPTANCE (NOA)

Eurotech Industries, Inc.
250 NE 32 Street
Ft. Lauderdale, FL 33334

SCOPE:

This NOA is being issued under the applicable rules and regulations governing the use of construction materials. The documentation submitted has been reviewed by Miami-Dade County Product Control Division and accepted by the Board of Rules and Appeals (BORA) to be used in Miami Dade County and other areas where allowed by the Authority Having Jurisdiction (AHJ).

This NOA shall not be valid after the expiration date stated below. The Miami-Dade County Product Control Division (In Miami Dade County) and/or the AHJ (in areas other than Miami Dade County) reserve the right to have this product or material tested for quality assurance purposes. If this product or material fails to perform in the accepted manner, the manufacturer will incur the expense of such testing and the AHJ may immediately revoke, modify, or suspend the use of such product or material within their jurisdiction. BORA reserves the right to revoke this acceptance, if it is determined by Miami-Dade County Product Control Division that this product or material fails to meet the requirements of the applicable building code.

This product is approved as described herein, and has been designed to comply with the Florida Building Code, including the High Velocity Hurricane Zone.

DESCRIPTION: Series PW-1000 Aluminum Fixed Window – S.M.I.

APPROVAL DOCUMENT: Drawing No. **W08-05**, titled "Aluminum Fixed Window (S.M.I.)", sheets 1 through 5 of 5, dated 01/10/08, prepared by Al-Farooq Corporation, signed and sealed by Humayoun Farooq, P.E., bearing the Miami-Dade County Product Control Approval stamp with the Notice of Acceptance number and approval date by the Miami-Dade County Product Control Division.

MISSILE IMPACT RATING: Small Missile Impact Resistant

LABELING: Each unit shall bear a permanent label with the manufacturer's name or logo, city, state and following statement: "Miami-Dade County Product Control Approved" or the Product Control Seal, unless otherwise noted herein.

RENEWAL of this NOA shall be considered after a renewal application has been filed and there has been no change in the applicable building code negatively affecting the performance of this product.

TERMINATION of this NOA will occur after the expiration date or if there has been a revision or change in the materials, use, and/or manufacture of the product or process. Misuse of this NOA as an endorsement of any product, for sales, advertising or any other purposes shall automatically terminate this NOA. Failure to comply with any section of this NOA shall be cause for termination and removal of NOA.

ADVERTISEMENT: The NOA number preceded by the words Miami-Dade County, Florida, and followed by the expiration date may be displayed in advertising literature. If any portion of the NOA is displayed, then it shall be done in its entirety.

INSPECTION: A copy of this entire NOA shall be provided to the user by the manufacturer or its distributors and shall be available for inspection at the job site at the request of the Building Official.

This NOA consists of this page 1 and evidence pages E-1 and E-2, as well as approval document mentioned above.

The submitted documentation was reviewed by **Manuel Perez, P.E.**

MIAMI-DADE COUNTY APPROVED

Eurotech Industries, Inc.

NOTICE OF ACCEPTANCE: EVIDENCE SUBMITTED

A. DRAWINGS

1. Manufacturer's die drawings and sections.
2. Drawing No **W08-05**, Sheets 1 through 5 of 5, titled "Aluminum Fixed Window (S.M.I.)", dated 01/10/08, prepared by Al-Farooq Corporation, signed and sealed by Humayoun Farooq, P.E.

B. TESTS

1. Test reports on: 1) Large Missile Impact Test per FBC, TAS 201-94
   2) Cyclic Wind Pressure Loading per FBC, TAS 203-94
   along with marked-up drawings and installation diagram of aluminum fixed window, prepared by Hurricane Engineering & Testing Inc., Test Report No. **HETI-07-4156**, dated 09/21/07, signed and sealed by Candido F. Font, P.E.
2. Test reports on: 1) Large Missile Impact Test per FBC, TAS 201-94
   2) Cyclic Wind Pressure Loading per FBC, TAS 203-94
   along with marked-up drawings and installation diagram of aluminum fixed window, prepared by Hurricane Engineering & Testing Inc., Test Report No. **HETI-07-4157**, dated 09/21/07, signed and sealed by Candido F. Font, P.E.
3. Test reports on: 1) Air Infiltration Test, per FBC, TAS 202-94
   2) Uniform Static Air Pressure Test, Loading per FBC TAS 202-94
   3) Water Resistance Test, per FBC, TAS 202-94
   along with marked-up drawings and installation diagram of aluminum fixed window, prepared by Hurricane Engineering & Testing Inc., Test Report No. **HETI-07-4158**, dated 09/21/07, signed and sealed by Candido F. Font, P.E.
4. Test reports on: 1) Air Infiltration Test, per FBC, TAS 202-94
   2) Uniform Static Air Pressure Test, Loading per FBC TAS 202-94
   3) Water Resistance Test, per FBC, TAS 202-94
   along with marked-up drawings and installation diagram of aluminum fixed window, prepared by Hurricane Engineering & Testing Inc., Test Report No. **HETI-07-4160**, dated 09/21/07, signed and sealed by Candido F. Font, P.E.
5. Test reports on: 1) Small Missile Impact Test per FBC, TAS 201-94
   2) Cyclic Wind Pressure Loading per FBC, TAS 203-94
   along with marked-up drawings and installation diagram of aluminum fixed window, prepared by Hurricane Engineering & Testing Inc., Test Report No. **HETI-07-4161**, dated 09/21/07, signed and sealed by Candido F. Font, P.E.
6. Test reports on: 1) Small Missile Impact Test per FBC, TAS 201-94
   2) Cyclic Wind Pressure Loading per FBC, TAS 203-94
   along with marked-up drawings and installation diagram of aluminum fixed window, prepared by Hurricane Engineering & Testing Inc., Test Report No. **HETI-07-4162**, dated 09/21/07, signed and sealed by Candido F. Font, P.E.

Manuel Perez

Manuel Perez, P.E.
Product Control Examiner
NOA No. 08-0131.05
Expiration Date: March 27, 2013
Approval Date: March 27, 2008

7. Test reports on: 1) Air Infiltration Test, per FBC, TAS 202-94
   2) Uniform Static Air Pressure Test, Loading per FBC TAS 202-94
   3) Water Resistance Test, per FBC, TAS 202-94
   along with marked-up drawings and installation diagram of aluminum fixed window, prepared by Hurricane Engineering & Testing Inc., Test Report No. **HETI-07-4164**, dated 09/21/07, signed and sealed by Candido F. Font, P.E.
8. Test reports on: 1) Large Missile Impact Test per FBC, TAS 201-94
   2) Cyclic Wind Pressure Loading per FBC, TAS 203-94
   along with marked-up drawings and installation diagram of aluminum fixed window, prepared by Hurricane Engineering & Testing Inc., Test Report No. **HETI-07-4165**, dated 09/21/07, signed and sealed by Candido F. Font, P.E.
9. Test reports on: 1) Large Missile Impact Test per FBC, TAS 201-94
   2) Cyclic Wind Pressure Loading per FBC, TAS 203-94
   along with marked-up drawings and installation diagram of aluminum fixed window, prepared by Hurricane Engineering & Testing Inc., Test Report No. **HETI-07-4166**, dated 09/21/07, signed and sealed by Candido F. Font, P.E.

C. CALCULATIONS

1. Anchor verification calculations and structural analysis, complying with FBC-2004, prepared by Al-Farooq Corporation, dated 1/11/08, signed and sealed by Humayoun Farooq, P.E.
   Complies with ASTM E1300-02

D. QUALITY ASSURANCE

1. Miami Dade Building Code Compliance Office (BCCO).

E. MATERIAL CERTIFICATIONS

1. Notice of Acceptance No. **07-1116.04** issued to E.I. DuPont DeNemours & Co., Inc. for their "**DuPont SentryGlas ® Plus**" dated 01/03/08, expiring on 01/14/12.
2. Notice of Acceptance No. **05-1208.02** issued to E.I. DuPont DeNemours & Co., Inc. for their "**DuPont Butacite PVB Interlayer**" dated 01/05/06, expiring on 12/11/10.

F. STATEMENTS

1. Statement letter of conformance, dated January 11, 2008, signed and sealed by Humayoun Farooq, P.E.
2. Statement letter of no financial interest, dated January 11, 2008, signed and sealed by Humayoun Farooq, P.E.
3. Test Proposal #**04-0472** issued by BCCO dated 10/27/04 signed by Manuel Perez, P.E.

G. OTHER

1. None.

Manuel Perez

Manuel Perez, P.E.
Product Control Examiner
NOA No. 08-0131.05
Expiration Date: March 27, 2013
Approval Date: March 27, 2008

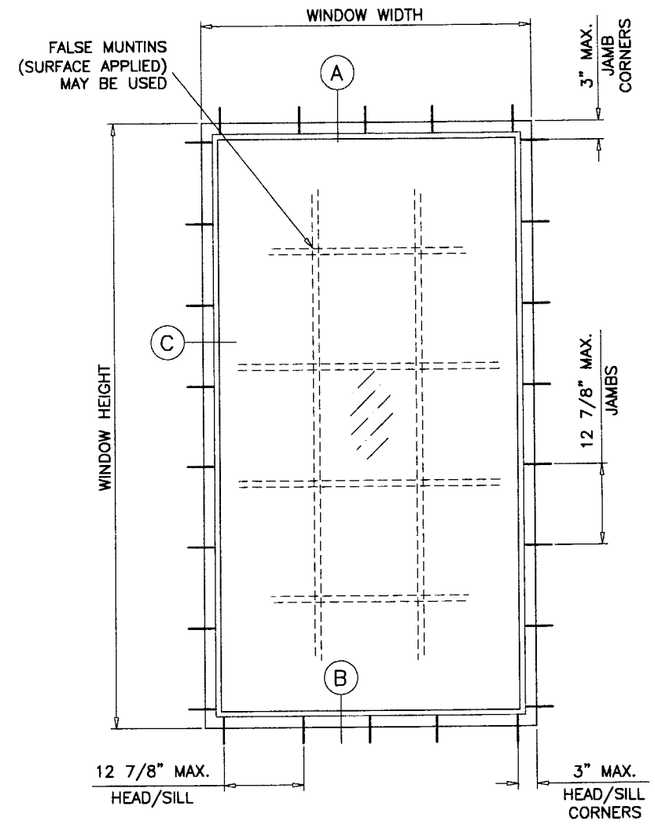

TYPICAL ELEVATION

ALUMINUM FIXED WINDOW

APPROVAL APPLIES TO SINGLE UNITS OR SIDE BY SIDE COMBINATIONS OF FIXED/FIXED OR FIXED WITH OTHER MIAMI–DADE COUNTY APPR'D WINDOWS USING MIAMI–DADE COUNTY APPROVED MULLIONS IN BETWEEN.
LOWER DESIGN PRESSURE FROM WINDOWS OR MULLION APPROVAL WILL APPLY TO ENTIRE SYSTEM.

DESIGN LOAD RATING FOR THESE WINDOWS TO BE AS PER CHARTS SHOWN ON SHEET 2.

THIS PRODUCT HAS BEEN DESIGNED AND TESTED TO COMPLY WITH THE REQUIREMENTS OF THE FLORIDA BUILDING CODE 2004 EDITION INCLUDING HIGH VELOCITY HURRICANE ZONE (HVHZ).

WOOD BUCKS BY OTHERS, MUST BE ANCHORED PROPERLY TO TRANSFER LOADS TO THE STRUCTURE.

ANCHORS SHALL BE AS LISTED, SPACED AS SHOWN ON DETAILS, ANCHORS EMBEDMENT TO BASE MATERIAL SHALL BE BEYOND WALL DRESSING OR STUCCO.

ANCHORING OR LOADING CONDITIONS NOT SHOWN IN THESE DETAILS ARE NOT PART OF THIS APPROVAL.

A LOAD DURATION INCREASE IN ALLOWABLE STRESS IS USED IN DESIGN OF ANCHORS INTO WOOD ONLY.

MATERIALS INCLUDING BUT NOT LIMITED TO STEEL/METAL SCREWS, THAT COME INTO CONTACT WITH OTHER DISSIMILAR MATERIALS SHALL MEET THE REQUIREMENTS OF 2004 FLORIDA BLDG. CODE SECTION 2003.8.4.

THESE WINDOWS ARE RATED FOR SMALL MISSILE IMPACT.
MIAMI–DADE COUNTY APPROVED IMPACT RESISTANT SHUTTERS REQUIRED FOR INSTALLATIONS UP TO 30 FT. OF GRADE.
SHUTTERS NOT REQD. FOR INSTALLATIONS ABOVE 30 FT. OF GRADE.

Engr: DR. HUMAYOUN FAROOQ
STRUCTURES
FLA. PE # 16557
C.A.N. 3538

JAN 2 3 2008

Approved as complying with the Florida Building Code
Date MARCH 27, 2008
NOA# 08-0131.05
Miami Dade Product Control Division
By Manuel Perez

AL-FAROOQ CORPORATION
ENGINEERS & PRODUCT DEVELOPMENT
1235 S.W. 87 AVE
MIAMI, FLORIDA 33174
TEL. (305) 264-8100 FAX. (305) 262-6978
COMP–ANL\W08–05EWD

ALUMINUM FIXED WINDOW (S.M.I.)

EUROTECH WINDOWS & DOORS
250 N.E. 32nd STREET
FT. LAUDERDALE, FL. 33334
TEL. (954) 630–9967 TEL. (954) 630–0217

revisions:

no	date	by	description

date: 01–10–08
scale: 1/2"=1'–0"
dr. by: HAMID
chk. by:

drawing no.
W08–05

DESIGN LOAD CAPACITY – PSF					
WINDOW DIMS.		GLASS TYPE 'A'		GLASS TYPE 'B'	
WIDTH	LENGTH	EXT.(+)	INT.(–)	EXT.(+)	INT.(–)
26–1/2"	26"	110.0	110.0	120.0	210.0
32"		110.0	110.0	120.0	210.0
37"		110.0	110.0	120.0	210.0
42"		110.0	110.0	120.0	210.0
48"		110.0	110.0	120.0	210.0
53–1/8"		110.0	110.0	120.0	210.0
26–1/2"	38–3/8"	110.0	110.0	120.0	210.0
32"		110.0	110.0	120.0	210.0
37"		110.0	110.0	116.8	204.3
42"		110.0	110.0	112.6	197.0
48"		110.0	110.0	75.0	75.0
53–1/8"		110.0	110.0	75.0	75.0
26–1/2"	50–5/8"	110.0	110.0	120.0	210.0
32"		110.0	110.0	120.0	210.0
37"		110.0	110.0	75.0	75.0
42"		110.0	110.0	75.0	75.0
48"		110.0	110.0	75.0	75.0
53–1/8"		104.8	104.8	71.1	71.1
26–1/2"	63"	110.0	110.0	120.0	210.0
32"		110.0	110.0	75.0	75.0
37"		110.0	110.0	75.0	75.0
42"		110.0	110.0	75.0	75.0
48"		110.0	110.0	75.0	75.0
53–1/8"		99.4	99.4	67.8	67.8
26–1/2"	74–1/4"	110.0	110.0	75.0	75.0
32"		110.0	110.0	75.0	75.0
37"		110.0	110.0	75.0	75.0
42"		110.0	110.0	75.0	75.0
48"		–	–	75.0	75.0
53–1/8"		–	–	67.8	67.8
26–1/2"	78"	110.0	110.0	75.0	75.0
32"		110.0	110.0	75.0	75.0
37"		110.0	110.0	75.0	75.0
42"		110.0	110.0	75.0	75.0
48"		–	–	75.0	75.0
53–1/8"		–	–	67.8	67.8
26–1/2"	84"	110.0	110.0	75.0	75.0
32"		110.0	110.0	75.0	75.0
37"		110.0	110.0	75.0	75.0
42"		110.0	110.0	75.0	75.0
48"		–	–	75.0	75.0
53–1/8"		–	–	67.8	67.8
26–1/2"	96"	110.0	110.0	75.0	75.0
32"		110.0	110.0	75.0	75.0
37"		110.0	110.0	75.0	75.0
42"		–	–	75.0	75.0
48"		–	–	75.0	75.0

DESIGN LOAD CAPACITY – PSF					
WINDOW DIMS.		GLASS TYPE 'A'		GLASS TYPE 'B'	
WIDTH	LENGTH	EXT.(+)	INT.(–)	EXT.(+)	INT.(–)
24"	48"	110.0	110.0	120.0	210.0
30"		110.0	110.0	120.0	210.0
36"		110.0	110.0	120.0	210.0
42"		110.0	110.0	75.0	75.0
48"		110.0	110.0	75.0	75.0
54"		110.0	110.0	75.0	75.0
60"		110.0	110.0	75.0	75.0
24"	60"	110.0	110.0	120.0	210.0
30"		110.0	110.0	75.0	75.0
36"		110.0	110.0	75.0	75.0
42"		110.0	110.0	75.0	75.0
48"		110.0	110.0	75.0	75.0
54"		97.8	97.8	66.7	66.7
60"		–	–	60.0	60.0
24"	72"	110.0	110.0	120.0	210.0
30"		110.0	110.0	75.0	75.0
36"		110.0	110.0	75.0	75.0
42"		110.0	110.0	75.0	75.0
48"		110.0	110.0	75.0	75.0
54"		–	–	66.7	66.7
60"		–	–	60.0	60.0
24"	84"	110.0	110.0	75.0	75.0
30"		110.0	110.0	75.0	75.0
36"		110.0	110.0	75.0	75.0
42"		110.0	110.0	75.0	75.0
48"		–	–	75.0	75.0
54"		–	–	66.7	66.7
24"	96"	110.0	110.0	75.0	75.0
30"		110.0	110.0	75.0	75.0
36"		110.0	110.0	75.0	75.0
42"		–	–	75.0	75.0
48"		–	–	75.0	75.0
24"	108"	110.0	110.0	75.0	75.0
30"		110.0	110.0	75.0	75.0
36"		–	–	75.0	75.0
42"		–	–	75.0	75.0
24"	120"	110.0	110.0	75.0	75.0
30"		–	–	75.0	75.0
36"		–	–	75.0	75.0

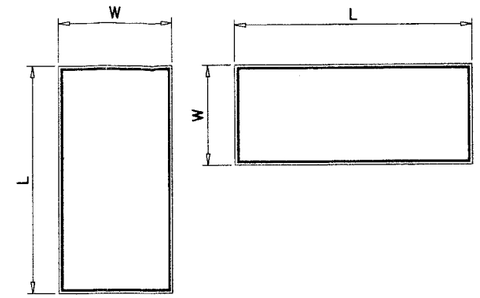

NOTE:
WIDTH AND LENGTH DIMENSIONS CAN BE ORIENTED VERTICALLY OR HORIZONTALLY AS SHOWN ABOVE.

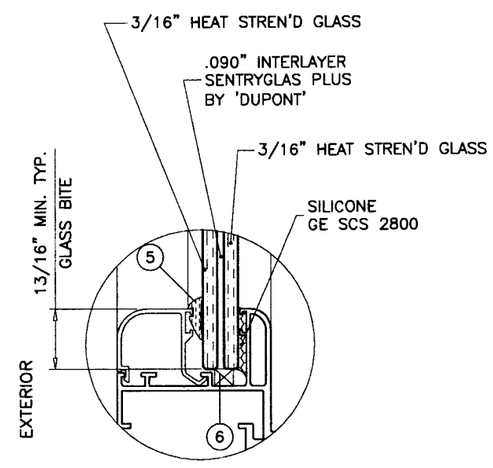

GLASS TYPE 'A'

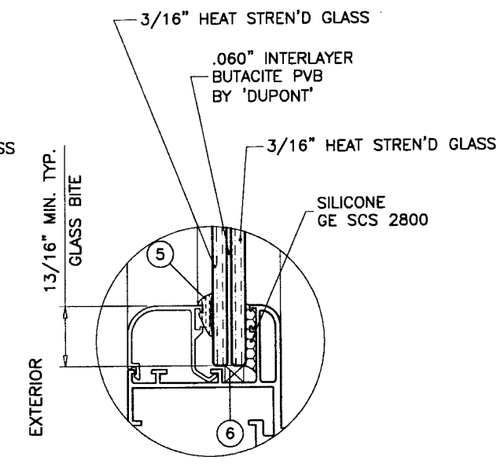

GLASS TYPE 'B'

GLAZING OPTIONS

NOTE:
GLASS CAPACITIES ON THIS SHEET ARE BASED ON ASTM E1300–02 (3 SEC. GUSTS).

Engr: DR. HUMAYOUN FAROOQ
STRUCTURES
FLA. PE # 16557
C.A.N. 3538

JAN 23 2008

Approved as complying with the Florida Building Code
Date MARCH 27, 2008
NOA# 08-0131.05
Miami Dade Product Control Division
By Manuel Perez

AL-FAROOQ CORPORATION
ENGINEERS & PRODUCT DEVELOPMENT
1235 S.W. 87 AVE
MIAMI, FLORIDA 33174
TEL. (305) 264-8100 FAX. (305) 262-6978
COMP–ANL\W08–05EWD

ALUMINUM FIXED WINDOW (S.M.I.)

EUROTECH WINDOWS & DOORS
250 N.E. 32nd STREET
FT. LAUDERDALE, FL. 33334
TEL. (954) 630-0217 TEL. (954) 630-9967

revisions:

no	date	by	description

date: 01–10–08
scale: 1/2"=1'–0"
dr. by: HAMID
chk. by:

drawing no.
W08–05

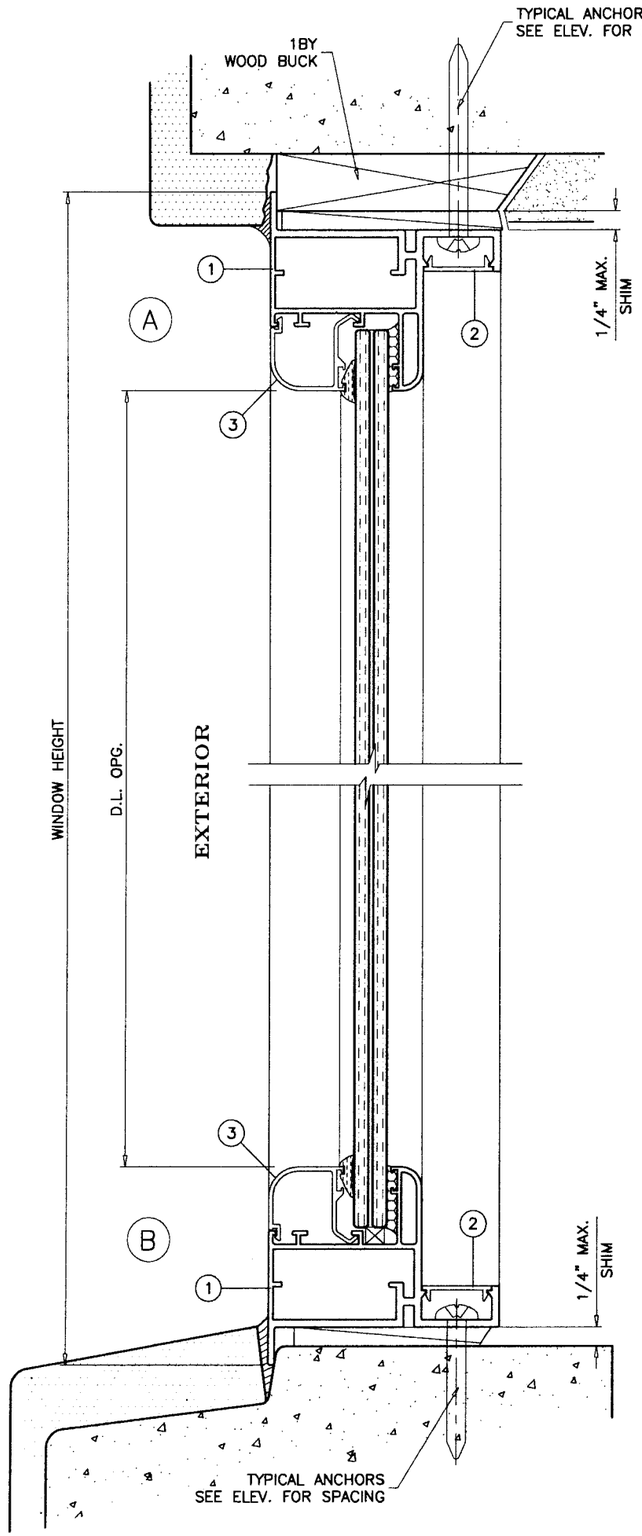

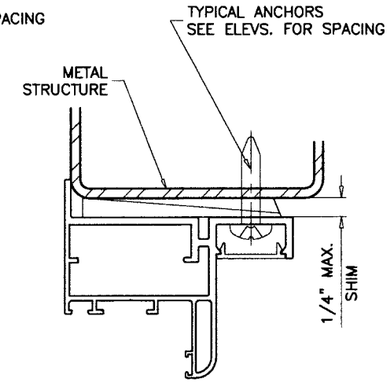

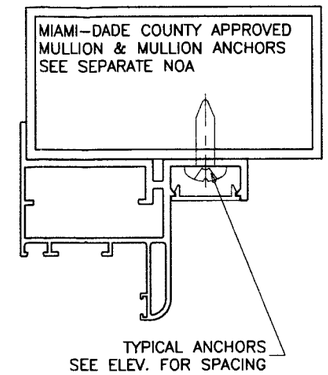

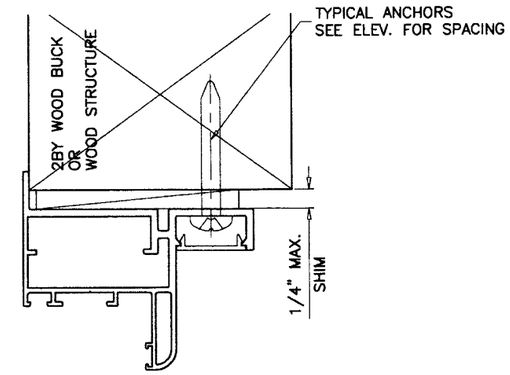

TYPICAL ANCHORS: SEE ELEV. FOR SPACING

1/4" TAPCONS BY 'ELCO'

INTO 2BY WOOD BUCKS OR WOOD STRUCTURES
1-3/8" MIN. PENETRATION INTO WOOD

THRU 1BY BUCKS INTO CONC. OR MASONRY
1-1/4" MIN. EMBED INTO CONC. OR MASONRY

DIRECTLY INTO CONC. OR MASONRY
1-1/4" MIN. EMBED INTO CONC. OR MASONRY

#14 SMS OR SELF DRILLING SCREWS

INTO METAL STRUCTURES

STEEL : 12 GA. MIN. (Fy = 36 KSI MIN.)
ALUMINUM : 1/8" THK. MIN. (6063-T5 MIN.)
(STEEL IN CONTACT WITH ALUMINUM TO BE PLATED OR PAINTED)

#14 SMS OR SELF DRILLING SCREWS

INTO DADE COUNTY APPROVED MULLIONS (MIN. THK. = .090")
(NO SHIM SPACE)

TYPICAL EDGE DISTANCE

INTO CONCRETE AND MASONRY = 2" MIN.
INTO WOOD STRUCTURE = 3/4" MIN.
INTO METAL STRUCTURE = 3/4" MIN.

SEALANTS:

ALL JOINTS AND FRAME CONNECTIONS SEALED WITH
CRL SMALL JOINT SEALER.

WOOD BUCKS AND METAL STRUCTURE NOT BY EUROTECH
MUST SUSTAIN LOADS IMPOSED BY GLAZING SYSTEM
AND TRANSFER THEM TO THE BUILDING STRUCTURE.

Engr: DR. HUMAYOUN FAROOQ
STRUCTURES
FLA. PE # 16557
C.A.N. 3538

JAN 23 2008

Approved as complying with the
Florida Building Code
Date MARCH 27, 2008
NOA# 08-0131.05
Miami Dade Product Control
Division
By Manuel Perez

AL-FAROOQ CORPORATION
ENGINEERS & PRODUCT DEVELOPMENT
1235 S.W. 87 AVE
MIAMI, FLORIDA 33174
TEL. (305) 264-8100 FAX. (305) 262-6978

COMP-ANL\W08-05EWD

ALUMINUM FIXED WINDOW (S.M.I.)

EUROTECH WINDOWS & DOORS
250 N.E. 32nd STREET
FT. LAUDERDALE, FL. 33334
TEL. (954) 630-9967 TEL. (954) 630-0217

revisions:

no	date	by	description

date: 01-10-08
scale: 1/2" = 1"
dr. by: HAMID
chk. by:

drawing no.
W08-05

sheet 3 of 5

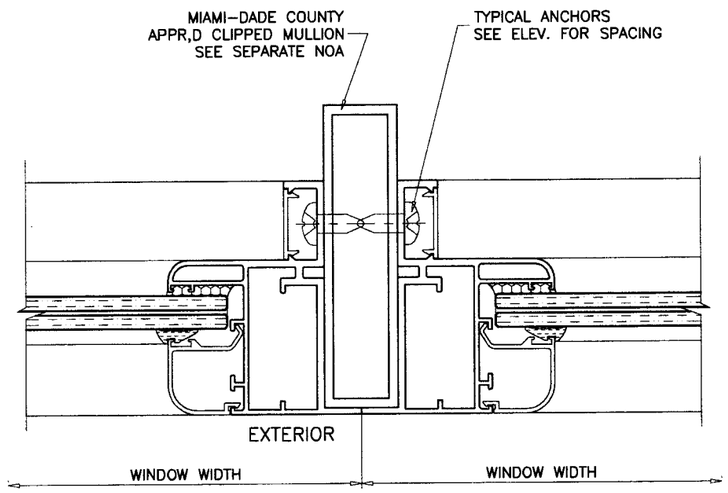

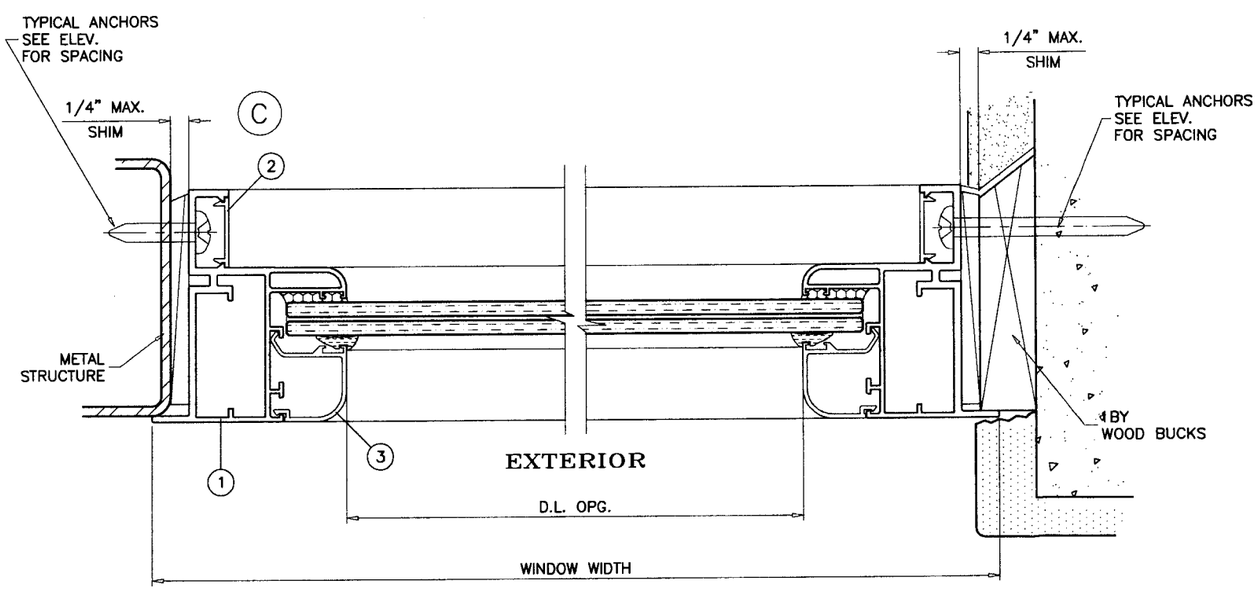

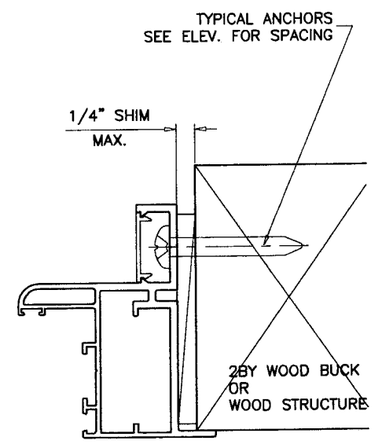

Engr: DR. HUMAYOUN FAROOQ
STRUCTURES
FLA. PE # 16557
C.A.N. 3538

JAN 2 3 2008

Approved as complying with the
Florida Building Code
Date MARCH 27, 2008
NOA# 08-0131.05
Miami Dade Product Control
Division
By Manuel Perez

AL-FAROOQ CORPORATION
ENGINEERS & PRODUCT DEVELOPMENT
1235 S.W. 87 AVE
MIAMI, FLORIDA 33174
TEL. (305) 264-8100 FAX. (305) 262-6978
COMP-ANL\W08-05EWD

ALUMINUM FIXED WINDOW (S.M.I.)

EUROTECH WINDOWS & DOORS
250 N.E. 32nd STREET
FT. LAUDERDALE, FL. 33334
TEL. (954) 630-0217 TEL. (954) 630-9967

revisions:

no	date	by	description

date: 01-10-08
scale: 1/2" = 1"
dr. by: HAMID
chk. by:

drawing no.
W08-05

sheet 4 of 5

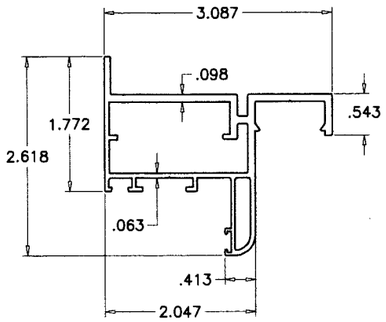

1 FRAME

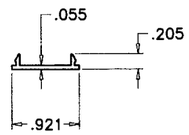

2 FRAME COVER (OPTIONAL)

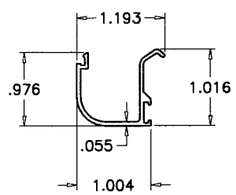

3 GLAZING BEAD

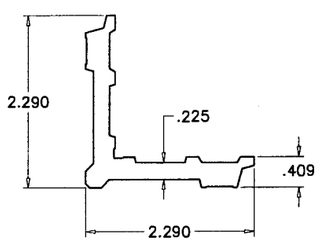

4 CORNER KEY

ITEM	PART #	QUANTITY	DESCRIPTION	MATERIAL	MANF./SUPPLIER/REMARKS
1	ER 014	4	WINDOW FRAME	6063-T5	–
2	HW 013	4	FRAME COVER (OPTIONAL)	6063-T6	–
3	ER 015	4	GLAZING BEAD	6063-T6	–
4	–	4	CORNER KEY	6063-T5	–
5	–	4	WEDGE GASKET	EPDM	–
6	–	2/ WDW.	SETTING BLOCKS (1/4" X 1/4" X 2" LONG)	–	6" FROM ENDS
7	–	–	–	–	–

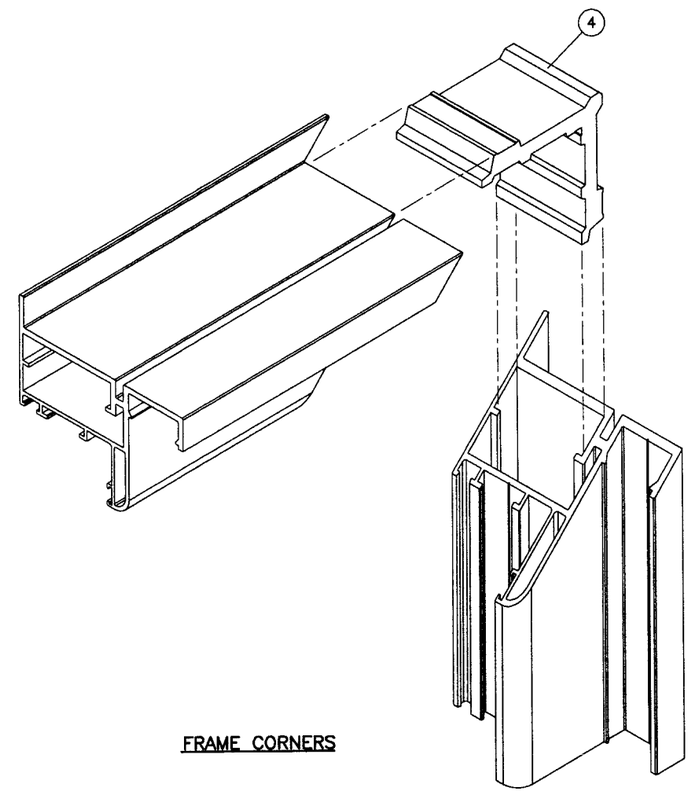

FRAME CORNERS

Engr: DR. HUMAYOUN FAROOQ
STRUCTURES
FLA. PE # 16557
C.A.N. 3538

JAN 23 2008

Approved as complying with the Florida Building Code
Date MARCH 27, 2008
NOA# 08-0131.05
Miami Dade Product Control Division
By Manuel Perez

AL-FAROOQ CORPORATION
ENGINEERS & PRODUCT DEVELOPMENT
1235 S.W. 87 AVE
MIAMI, FLORIDA 33174
TEL. (305) 264-8100 FAX. (305) 262-6978
COMP-ANL\W08-05EWD

ALUMINUM FIXED WINDOW (S.M.I.)

EUROTECH WINDOWS & DOORS
250 N.E. 32nd STREET
FT. LAUDERDALE, FL. 33334
TEL. (954) 630-0217 TEL. (954) 630-9967

revisions:

no	date	by	description

date: 01-10-08
scale: 1/2" = 1"
dr. by: HAMID
chk. by:

drawing no.
W08-05

sheet 5 of 5