MIAMI-DADE COUNTY, FLORIDA
METRO-DADE FLAGLER BUILDING
140 WEST FLAGLER STREET, SUITE 1603
MIAMI, FLORIDA 33130-1563
(305) 375-2901 FAX (305) 372-6339
www.miamidade.gov/buildingcode

BUILDING CODE COMPLIANCE OFFICE (BCCO)
PRODUCT CONTROL DIVISION

NOTICE OF ACCEPTANCE (NOA)

AWP, LLC.
8130 NW 74th Avenue
Medley, FL 33166

SCOPE:

This NOA is being issued under the applicable rules and regulations governing the use of construction materials. The documentation submitted has been reviewed by Miami-Dade County Product Control Division and accepted by the Board of Rules and Appeals (BORA) to be used in Miami Dade County and other areas where allowed by the Authority Having Jurisdiction (AHJ).

This NOA shall not be valid after the expiration date stated below. The Miami-Dade County Product Control Division (In Miami Dade County) and/or the AHJ (in areas other than Miami Dade County) reserve the right to have this product or material tested for quality assurance purposes. If this product or material fails to perform in the accepted manner, the manufacturer will incur the expense of such testing and the AHJ may immediately revoke, modify, or suspend the use of such product or material within their jurisdiction. BORA reserves the right to revoke this acceptance, if it is determined by Miami-Dade County Product Control Division that this product or material fails to meet the requirements of the applicable building code.

This product is approved as described herein, and has been designed to comply with the Florida Building Code, including the High Velocity Hurricane Zone.

DESCRIPTION: Series 1400 Aluminum Casement Window – N.I.

APPROVAL DOCUMENT: Drawing No. **W02-107**, titled "Series 1400 Aluminum Casement Window (N.I.)", sheets 1 through 7 of 7, dated 10/30/02 with revision "B" dated 01/02/08, prepared by Al-Farooq Corporation, signed and sealed by Humayoun Farooq, P.E., bearing the Miami-Dade County Product Control Revision stamp with the Notice of Acceptance number and expiration date by the Miami-Dade County Product Control Division.

MISSILE IMPACT RATING: None

LIMITATION: Miami-Dade County approved shutters are required.

LABELING: Each unit shall bear a permanent label with the manufacturer's name or logo, city, state and following statement: "Miami-Dade County Product Control Approved", unless otherwise noted herein.

RENEWAL of this NOA shall be considered after a renewal application has been filed and there has been no change in the applicable building code negatively affecting the performance of this product.

TERMINATION of this NOA will occur after the expiration date or if there has been a revision or change in the materials, use, and/or manufacture of the product or process. Misuse of this NOA as an endorsement of any product, for sales, advertising or any other purposes shall automatically terminate this NOA. Failure to comply with any section of this NOA shall be cause for termination and removal of NOA.

ADVERTISEMENT: The NOA number preceded by the words Miami-Dade County, Florida, and followed by the expiration date may be displayed in advertising literature. If any portion of the NOA is displayed, then it shall be done in its entirety.

INSPECTION: A copy of this entire NOA shall be provided to the user by the manufacturer or its distributors and shall be available for inspection at the job site at the request of the Building Official.

This NOA **revises and renews NOA # 06-1229.04** and consists of this page 1 and evidence pages E-1 and E-2, as well as approval document mentioned above.

The submitted documentation was reviewed by **Jaime D. Gascon, P.E.**

MIAMI-DADE COUNTY APPROVED

J. Gascon 2/20/08

NOA No. 08-0204.01
Expiration Date: January 23, 2013
Approval Date: March 13, 2008

NOTICE OF ACCEPTANCE: EVIDENCE SUBMITTED

A. DRAWINGS

1. Manufacturer's die drawings and sections.
2. Drawing No **W02-107**, titled "Series 1400 Aluminum Casement Window (N.I.)", Sheets 1 through 7 of 7, dated 10/30/02 with revision "B" dated 01/02/08, prepared by Al-Farooq Corporation, signed and sealed by Humayoun Farooq, P.E.

B. TESTS

1. Test reports on: 1) Air Infiltration Test, per FBC, TAS 202-94
   2) Uniform Static Air Pressure Test, Loading per FBC, TAS 202-94
   3) Water Resistance Test, per FBC, TAS 202-94
   4) Forced Entry Test, per FBC 2411.3.2.1 and TAS 202-94

   Along with marked-up drawings and installation diagram of an aluminum casement window, prepared by Fenestration Testing Laboratory, Test Report No. **FTL-3264** dated 02/11/02, signed and sealed by Luis Antonio Figueredo, P.E.
   (Submitted under NOA# 06-1229.04)
2. Test reports on: 1) Uniform Static Air Pressure Test, Loading per FBC, TAS 202-94
   Along with marked-up drawings and installation diagram of an aluminum casement window, prepared by Fenestration Testing Laboratory, Test Report No. **FTL-3265** dated 02/15/02, signed and sealed by Luis Antonio Figueredo, P.E.
   (Submitted under NOA# 06-1229.04)

C. CALCULATIONS

1. Anchor verification calculations and structural analysis, complying with FBC-2004, prepared by Al-Farooq Corporation, dated 10/28/06, signed and sealed by Humayoun Farooq, P.E.
   Complies with ASTM E1300-02

D. QUALITY ASSURANCE

1. Miami Dade Building Code Compliance Office (BCCO).

E. MATERIAL CERTIFICATIONS

1. None.

F. STATEMENTS

1. Statement letter of conformance, dated October 28, 2006, signed and sealed by Humayoun Farooq, P.E.
2. Statement letter of no financial interest, dated October 28, 2006, signed and sealed by Humayoun Farooq, P.E.

Jaime D. Gascon. P.E.
Chief, Product Control Division
NOA No. 08-0204.01
Expiration Date: January 23, 2013
Approval Date: March 13, 2008

NOTICE OF ACCEPTANCE: EVIDENCE SUBMITTED

F. STATEMENTS (Continued)

3. Statement letter of alternate framing system, dated January 16, 2008, signed and sealed by Humayoun Farooq, P.E.

G. OTHER

1. Notice of Acceptance No. **06-1229.04**, issued to Yale Ogron Windows & Doors for their Series "1400" Aluminum Casement Window, approved on 02/22/07 and expiring on 01/23/08.

Jaime D. Gascon. P.E.
Chief, Product Control Division
NOA No. 08-0204.01
Expiration Date: January 23, 2013
Approval Date: March 13, 2008

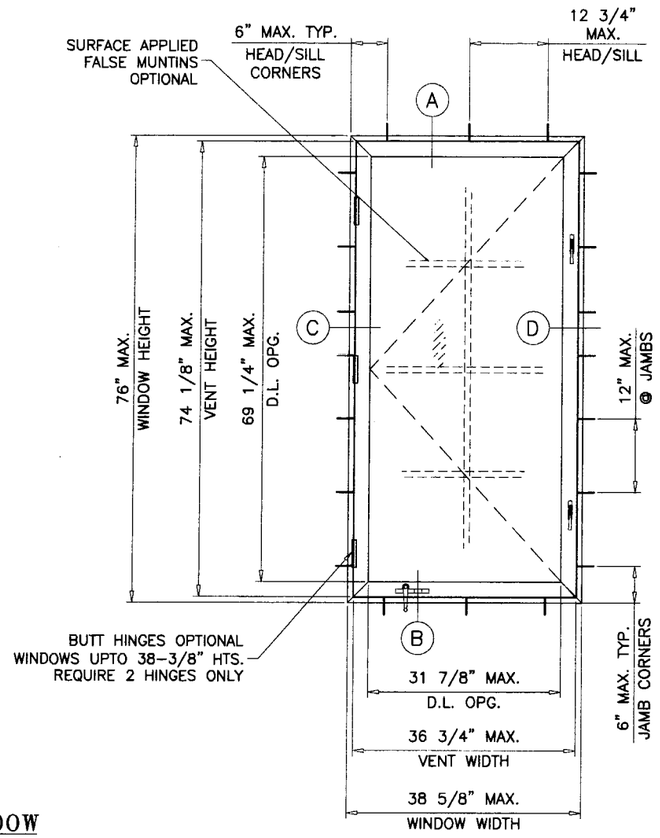

SINGLE VENT WDW.

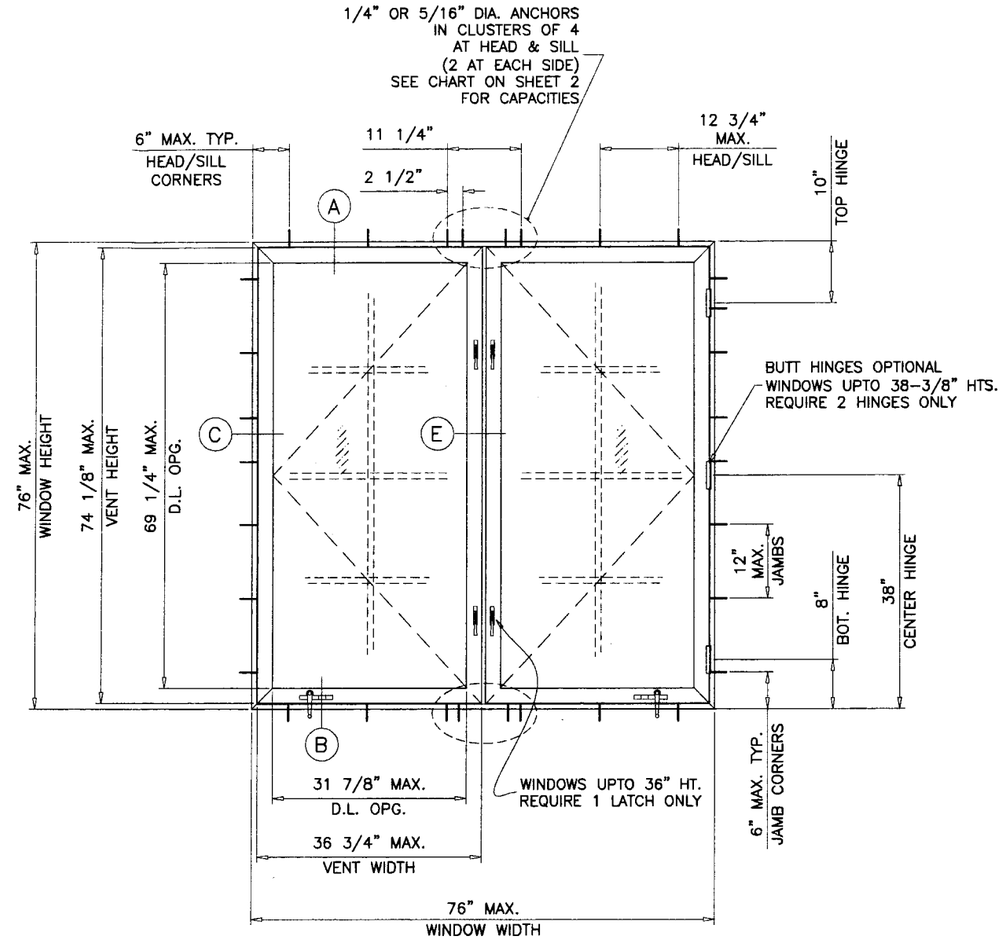

DUAL VENT WDW.

SERIES-1400
ALUMINUM CASEMENT WINDOW

DESIGN LOAD RATINGS FOR THESE WINDOWS TO BE AS PER CHARTS SHOWN ON SHEET 2.

APPROVAL APPLIES TO SINGLE CASEMENT WINDOWS, ALSO COMBINATIONS OF CASMT/CASMT OR CASMT WITH OTHER WINDOW TYPES IN MODULES OF TWO OR MORE WINDOWS USING MIAMI-DADE COUNTY APPROVED MULLIONS IN BETWEEN. LOWER DESIGN PRESSURE FROM WINDOWS OR MULLION APPROVAL WILL APPLY TO ENTIRE SYSTEM.

THIS PRODUCT HAS BEEN DESIGNED AND TESTED TO COMPLY WITH THE REQUIREMENTS OF THE FLORIDA BUILDING CODE 2004 EDITION INCLUDING HIGH VELOCITY HURRICANE ZONE (HVHZ).

WOOD BUCKS BY OTHERS, MUST BE ANCHORED PROPERLY TO TRANSFER LOADS TO THE STRUCTURE.

ANCHORS SHALL BE AS LISTED, SPACED AS SHOWN ON DETAILS, ANCHORS EMBEDMENT TO BASE MATERIAL SHALL BE BEYOND WALL DRESSING OR STUCCO.

ANCHORING OR LOADING CONDITIONS NOT SHOWN IN THESE DETAILS ARE NOT PART OF THIS APPROVAL.

A LOAD DURATION INCREASE IN ALLOWABLE STRESS IS USED IN DESIGN OF ANCHORS INTO WOOD ONLY.

MATERIALS INCLUDING BUT NOT LIMITED TO STEEL/METAL SCREWS, THAT COME INTO CONTACT WITH OTHER DISSIMILAR MATERIALS SHALL MEET THE REQUIREMENTS OF 2004 FLORIDA BLDG. CODE SECTION 2003.8.4.

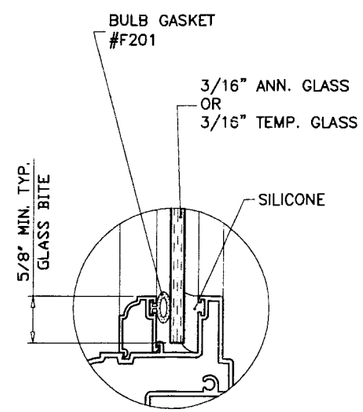

GLAZING DETAIL

WINDOWS NOT RATED FOR IMPACT.
INSTALLATION OF THIS PRODUCT IN THE HVHZ AREA REQUIRES THE USE OF APPROVED SHUTTERS OR EXTERNAL PROTECTION DEVICES COMPLYING WITH HVHZ REQUIREMENTS.
INSTALLATION OF THIS SYSTEM OUTSIDE THE HVHZ AREA SHALL MEET THE APPLICABLE REQUIREMENTS FOR WIND BORNE DEBRIS PROTECTION.

Engr: DR. HUMAYOUN FAROOQ
STRUCTURES
FLA. PE # 16557
C.A.N. 3538

JAN 2 4 2008

PRODUCT REVISED
as complying with the Florida Building Code
Acceptance No 08-0208.01
Expiration Date 01/23/2013
By
Miami-Dade Product Control Division

AL-FAROOQ CORPORATION
ENGINEERS & PRODUCT DEVELOPMENT
1235 S.W. 87 AVE
MIAMI, FLORIDA 33174
TEL. (305) 264-8100 FAX. (305) 262-6978

COMP-ANL\W02-107YO

SERIES-1400 ALUMINUM CASEMENT WDW. (N.I.)

AWP, LLC
Manufacturers of Yale Ogron Windows and Doors
8130 N.W. 74TH AVE.
MEDLEY, FL. 33166
TEL (305) 887-2646 FAX (305) 883-1309

revisions:

no	date	by	description
A	10.31.06		UPDATED FOR 2004 FBC
B	01.02.08		ALT. FRAME & MANF. NAME

date: 10-30-02
scale: 1/2"=1'-0"
dr. by: HAMID
chk. by:

drawing no.
W02-107

sheet 1 of 7

DESIGN LOAD CAPACITY – PSF FOR (X) SIZES					
WINDOW DIMS.		3/16" ANN. GLASS		3/16" TEMP. GLASS	
WIDTH	HEIGHT	EXT.(+)	INT.(–)	EXT.(+)	INT.(–)
19–1/8"	26" (3)	60.0	125.0	60.0	184.2
26–1/2"		60.0	125.0	60.0	132.9
37"		60.0	113.5	60.0	126.9
19–1/8"	38–3/8" (4)	60.0	125.0	60.0	166.4
26–1/2"		60.0	107.4	60.0	120.1
37"		60.0	76.9	60.0	86.0
19–1/8"	50–5/8" (5)	60.0	112.8	60.0	157.7
26–1/2"		60.0	81.4	60.0	113.8
37"		X	X	60.0	81.5
19–1/8"	63" (6)	60.0	87.8	60.0	146.7
26–1/2"		X	X	60.0	105.8
37"		X	X	60.0	75.8
19–1/8"	74–1/4" (7)	53.1	53.1	60.0	119.2
26–1/2"		X	X	60.0	87.8
37"		X	X	60.0	64.3
19–1/8"	76" (7)	49.5	49.5	60.0	112.0
26–1/2"		X	X	60.0	82.7
37"		X	X	60.0	62.2

( ) = NO. OF ANCHORS PER JAMB

DESIGN LOAD CAPACITY – PSF FOR (XX) SIZES							
		CLUSTER OF 1/4" ANCHORS AT IMPOST LOCATION				CLUSTER OF 5/16" ANCHORS AT IMPOST LOCATION	
WINDOW DIMS.		3/16" ANN. GLASS		3/16" TEMP. GLASS		3/16" TEMP. GLASS	
WIDTH	HEIGHT	EXT.(+)	INT.(–)	EXT.(+)	INT.(–)	EXT.(+)	INT.(–)
26–1/2"	26" (3)	60.0	125.0	60.0	210.0	60.0	210.0
37"		60.0	125.0	60.0	190.4	60.0	190.4
48"		60.0	125.0	60.0	146.8	60.0	146.8
53–1/8"		60.0	125.0	60.0	132.6	60.0	132.6
74"		60.0	110.2	60.0	95.2	60.0	95.2
76"		60.0	107.3	60.0	92.7	60.0	92.7
26–1/2"	38–3/8" (4)	60.0	125.0	60.0	210.0	60.0	210.0
37"		60.0	125.0	60.0	172.0	60.0	172.0
48"		60.0	115.1	60.0	132.6	60.0	132.6
53–1/8"		60.0	104.0	60.0	119.8	60.0	119.8
74"		60.0	74.7	60.0	86.0	60.0	86.0
76"		60.0	72.7	60.0	83.7	60.0	83.7
26–1/2"	50–5/8" (5)	60.0	125.0	60.0	182.0	60.0	210.0
37"		60.0	113.2	60.0	130.4	60.0	157.2
48"		60.0	87.3	60.0	100.5	60.0	121.1
53–1/8"		60.0	78.9	60.0	90.8	60.0	109.5
74"		X	X	60.0	65.2	60.0	78.6
76"		X	X	60.0	63.5	60.0	76.5
26–1/2"	63" (6)	60.0	121.3	60.0	146.3	60.0	196.9
37"		60.0	88.3	60.0	104.8	60.0	141.0
48"		60.0	69.7	60.0	80.8	60.0	108.7
53–1/8"		X	X	60.0	73.0	60.0	98.2
74"		X	X	51.3	51.3	60.0	70.5
76"		X	X	50.7	50.7	60.0	68.6
26–1/2"	74–1/4" (7)	60.0	73.7	60.0	124.1	60.0	158.8
37"		53.4	53.4	60.0	88.9	60.0	114.9
48"		X	X	60.0	68.5	60.0	89.8
53–1/8"		X	X	60.0	61.9	60.0	81.7
74"		X	X	40.7	40.7	59.8	59.8
76"		X	X	39.9	39.9	58.2	58.2
26–1/2"	76" (7)	60.0	68.7	60.0	121.3	60.0	149.1
37"		49.8	49.8	60.0	86.9	60.0	108.0
48"		X	X	60.0	66.9	60.0	84.6
53–1/8"		X	X	60.0	60.5	60.0	77.1
74"		X	X	39.4	39.4	58.1	58.1
76"		X	X	38.8	38.8	56.9	56.9

( ) = NO. OF ANCHORS PER JAMB

OR 1/4" ANCHORS INTO PRECAST SILL THESE ANCHORS MAY BE 1/4" WHEN USING Ⓐ Ⓑ & Ⓒ ALTERNATE FRAMING AS SHOWN ON SHEET 5 OF 7

5/16" ANCHORS REQD. AT IMPOST CLUSTERS ONLY AT HEAD & SILL
ALL OTHER HEAD, SILL AND JAMB ANCHORS TO BE 1/4".

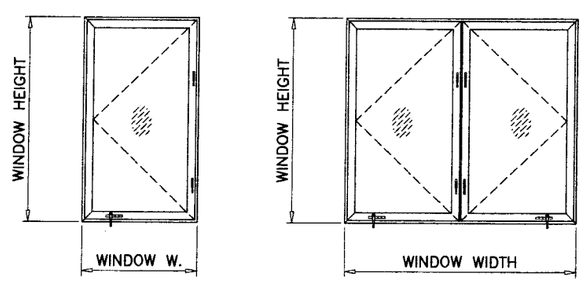

X XX

APPROVED CONFIGURATIONS

NOTE:
GLASS CAPACITIES ON THIS SHEET ARE BASED ON ASTM E1300–02 (3 SEC. GUSTS) AND FLORIDA BUILDING COMMISSION DECLARATORY STATEMENT DCA05–DEC–219

Engr: DR. HUMAYOUN FAROOQ
STRUCTURES
FLA. PE # 16557
C.A.N. 3538

JAN 2 4 2008

PRODUCT REVISED
as complying with the Florida Building Code
Acceptance No 08-0204.01
Expiration Date 01/23/2013
By
Miami Dade Product Control Division

AL-FAROOQ CORPORATION
ENGINEERS & PRODUCT DEVELOPMENT
1235 S.W. 87 AVE
MIAMI, FLORIDA 33174
TEL. (305) 264-8100 FAX. (305) 262-6978

COMP–ANL\W02–107YO

SERIES–1400 ALUMINUM CASEMENT WDW. (N.I.)

AWP, LLC
Manufacturers of Yale Ogron Windows and Doors
8130 N.W. 74TH AVE.
MEDLEY, FL. 33166
TEL. (305) 887-2646 FAX (305) 883-1309

revisions:

no	date	by	description
A	10.31.06		UPDATED FOR 2004 FBC
B	01.02.08		ALT. FRAME & MANF. NAME

date: 10–30–02
scale: 1/2" = 1"
dr. by: HAMID
chk. by:

drawing no.
W02–107

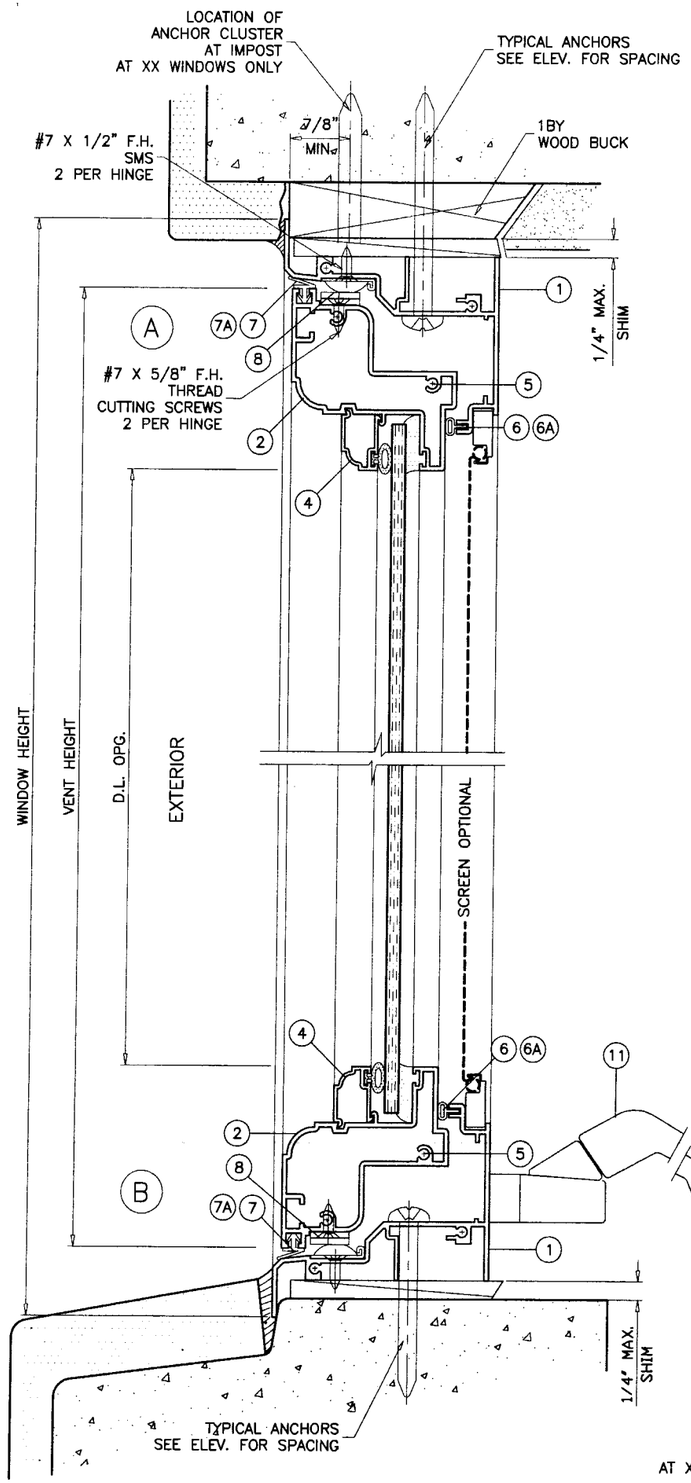

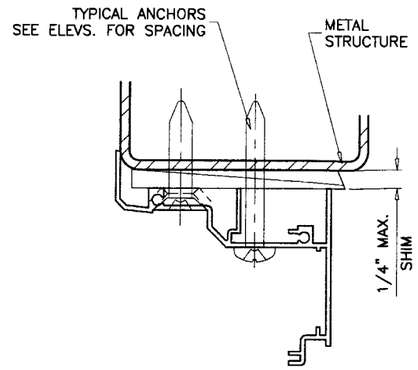

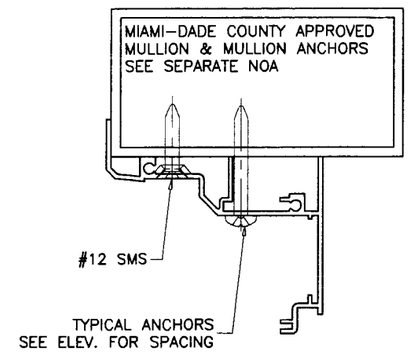

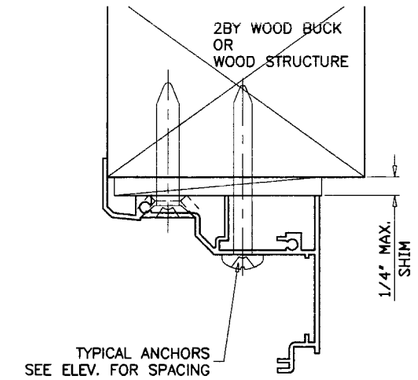

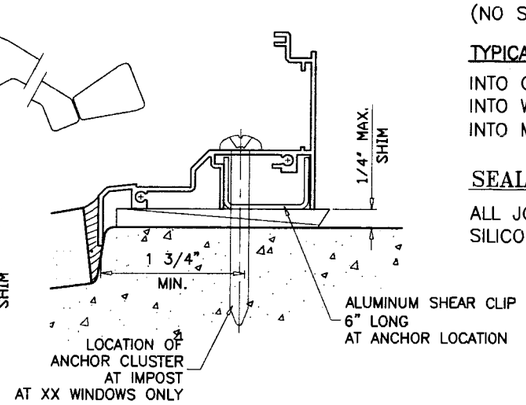

WOOD BUCKS AND METAL STRUCTURE NOT BY YALE OGRON MUST SUSTAIN LOADS IMPOSED BY GLAZING SYSTEM AND TRANSFER THEM TO THE BUILDING STRUCTURE.

TYPICAL ANCHORS: SEE ELEV. FOR SPACING

1/4" TAPCONS

INTO 2BY WOOD BUCKS OR WOOD STRUCTURES
1-3/8" MIN. PENETRATION INTO WOOD

THRU 1BY BUCKS INTO CONC. OR MASONRY
1-1/4" MIN. EMBED INTO CONC. OR MASONRY

DIRECTLY INTO CONC. OR MASONRY
1-1/4" MIN. EMBED INTO CONC. OR MASONRY

5/16" TAPCONS

INTO 2BY WOOD BUCKS OR WOOD STRUCTURES
1-3/8" MIN. PENETRATION INTO WOOD

THRU 1BY BUCKS INTO CONC. OR MASONRY
1-1/4" MIN. EMBED INTO CONC. OR MASONRY

#14 SMS OR SELF DRILLING SCREWS

INTO METAL STRUCTURES

STEEL : 12 GA. MIN. (Fy = 36 KSI MIN.)
ALUMINUM : 1/8" THK. MIN. (6063-T5 MIN.)
(STEEL IN CONTACT WITH ALUMINUM TO BE PLATED OR PAINTED)

#12 SMS OR SELF DRILLING SCREWS

INTO DADE COUNTY APPROVED MULLIONS (MIN. THK. = .090")
(NO SHIM SPACE)

TYPICAL EDGE DISTANCE

INTO CONCRETE AND MASONRY = 1-3/4" MIN.
INTO WOOD STRUCTURE = AS SHOWN
INTO METAL STRUCTURE = 1/2" MIN.

SEALANTS:

ALL JOINTS AND FRAME CONNECTIONS SEALED WITH SILICONE OR ACRYLIC SEALANT.

Engr: DR. HUMAYOUN FAROOQ
STRUCTURES
FLA. PE # 16557
C.A.N. 3538

JAN 2 4 2008

PRODUCT REVISED
as complying with the Florida
Building Code
Acceptance No 08-0204.01
Expiration Date 01/23/2013
By
Miami Dade Product Control
Division

AL-FAROOQ CORPORATION
ENGINEERS & PRODUCT DEVELOPMENT
1235 S.W. 87 AVE
MIAMI, FLORIDA 33174
TEL. (305) 264-8100 FAX. (305) 262-6978
COMP-ANL\W02-107YO

SERIES-1400 ALUMINUM CASEMENT WDW. (N.I.)

AWP, LLC
Manufacturers of Yale Ogron Windows and Doors
8130 N.W. 74TH AVE.
MEDLEY, FL. 33166
TEL. (305) 887-2646 FAX (305) 883-1309

revisions:

no	date	by	description
A	10.31.06		UPDATED FOR 2004 FBC
B	01.02.08		ALT. FRAME & MANF. NAME

date: 10-30-02
scale: 1/2" = 1"
dr. by: HAMID
chk. by:

drawing no.
W02-107

sheet 3 of 7

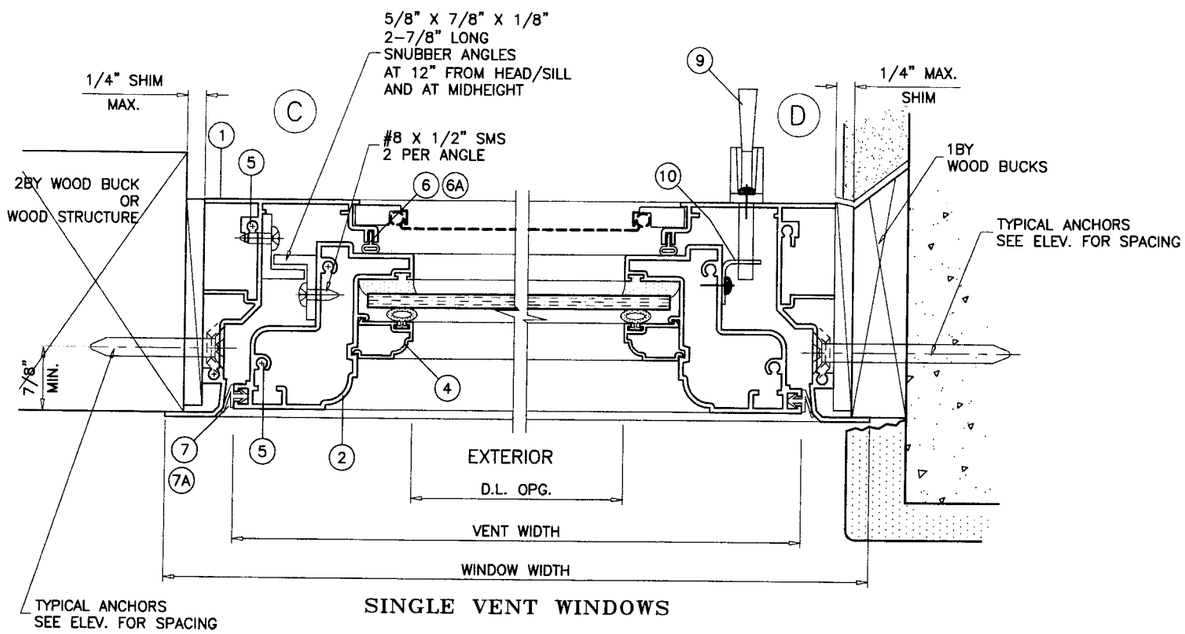

SINGLE VENT WINDOWS

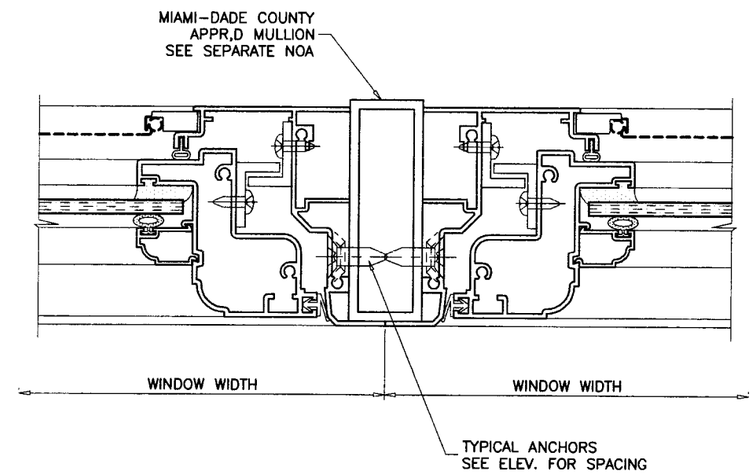

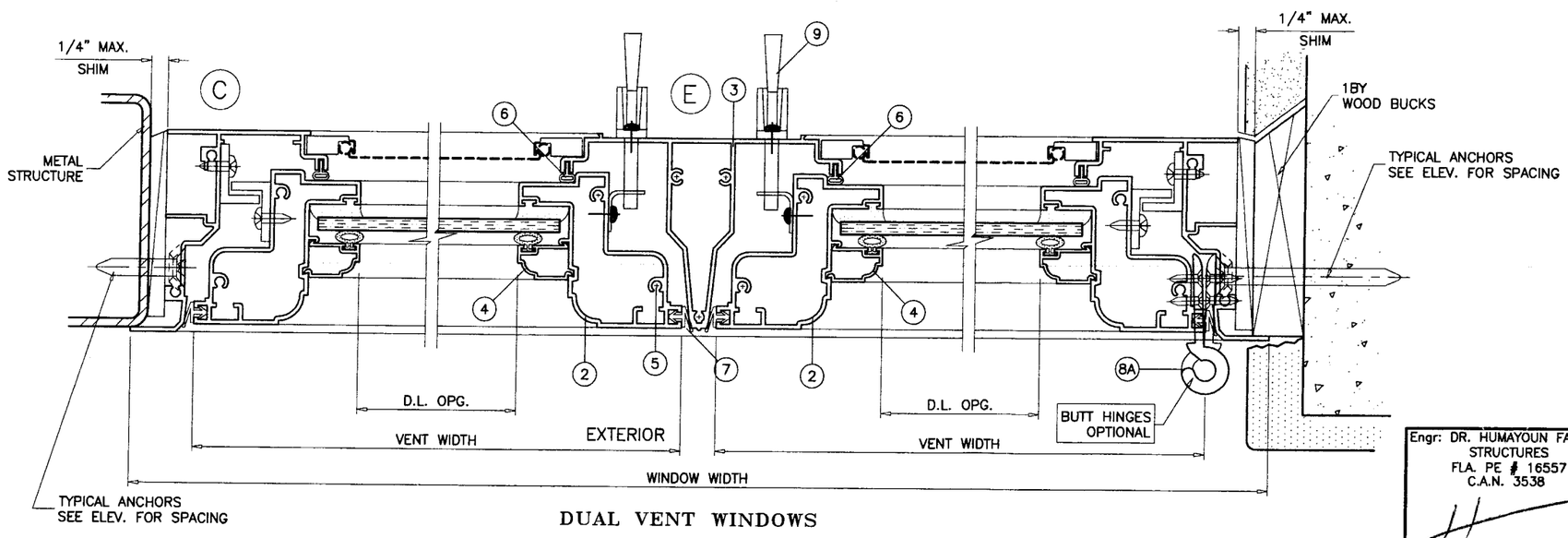

DUAL VENT WINDOWS

Engr: DR. HUMAYOUN FAROOQ
STRUCTURES
FLA. PE # 16557
C.A.N. 3538

JAN 2 4 2008

PRODUCT REVISED
as complying with the Florida
Building Code
Acceptance No 08-0204.01
Expiration Date 01/23/2013
By
Miami Dade Product Control
Division

AL-FAROOQ CORPORATION
ENGINEERS & PRODUCT DEVELOPMENT
1235 S.W. 87 AVE
MIAMI, FLORIDA 33174
TEL. (305) 264-8100 FAX. (305) 262-6978
COMP-ANL\W02-107YO

SERIES-1400 ALUMINUM CASEMENT WDW. (N.I.)

AWP, LLC
Manufacturers of Yale Ogron Windows and Doors
8130 N.W. 74TH AVE.
MEDLEY, FL. 33166
TEL. (305) 887-2646 FAX (305) 883-1309

revisions:

no	date	by	description
A	10.31.06		UPDATED FOR 2004 FBC
B	01.02.08		ALT. FRAME & MANF. NAME

date: 10-30-02
scale: 1/2" = 1"
dr. by: HAMID
chk. by:

drawing no.
W02-107

sheet 4 of 7

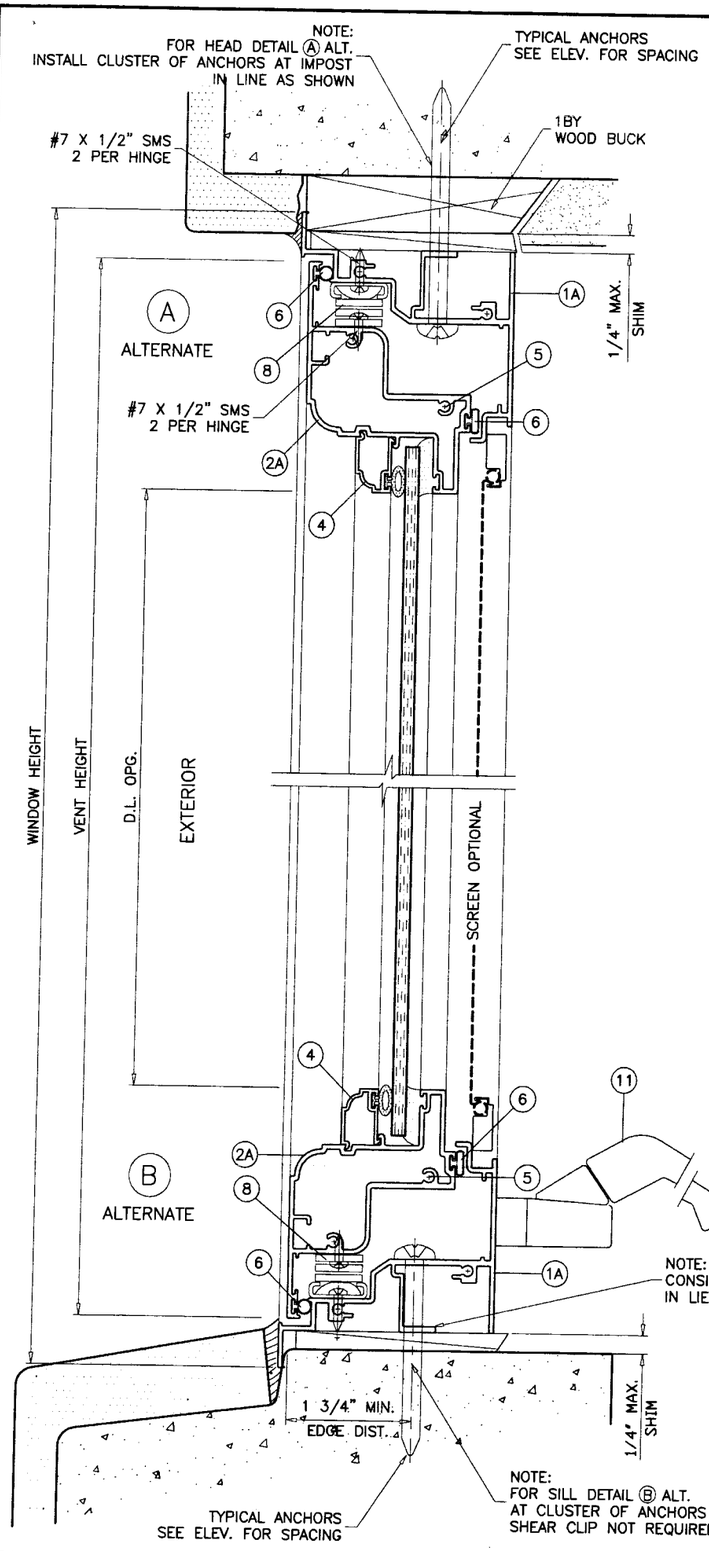

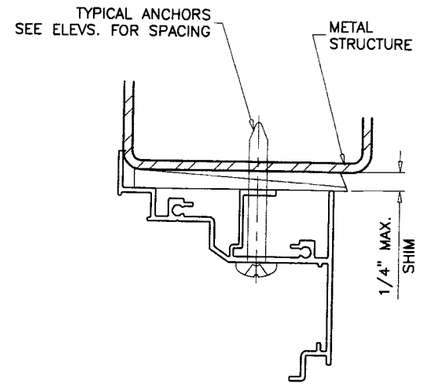

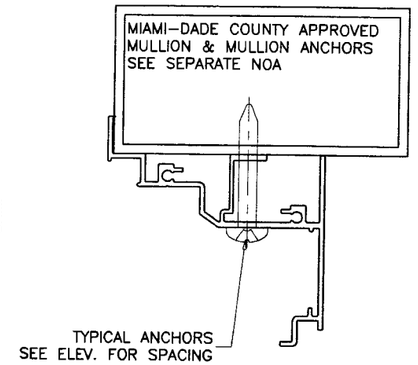

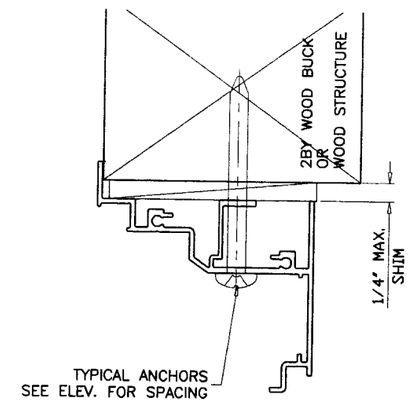

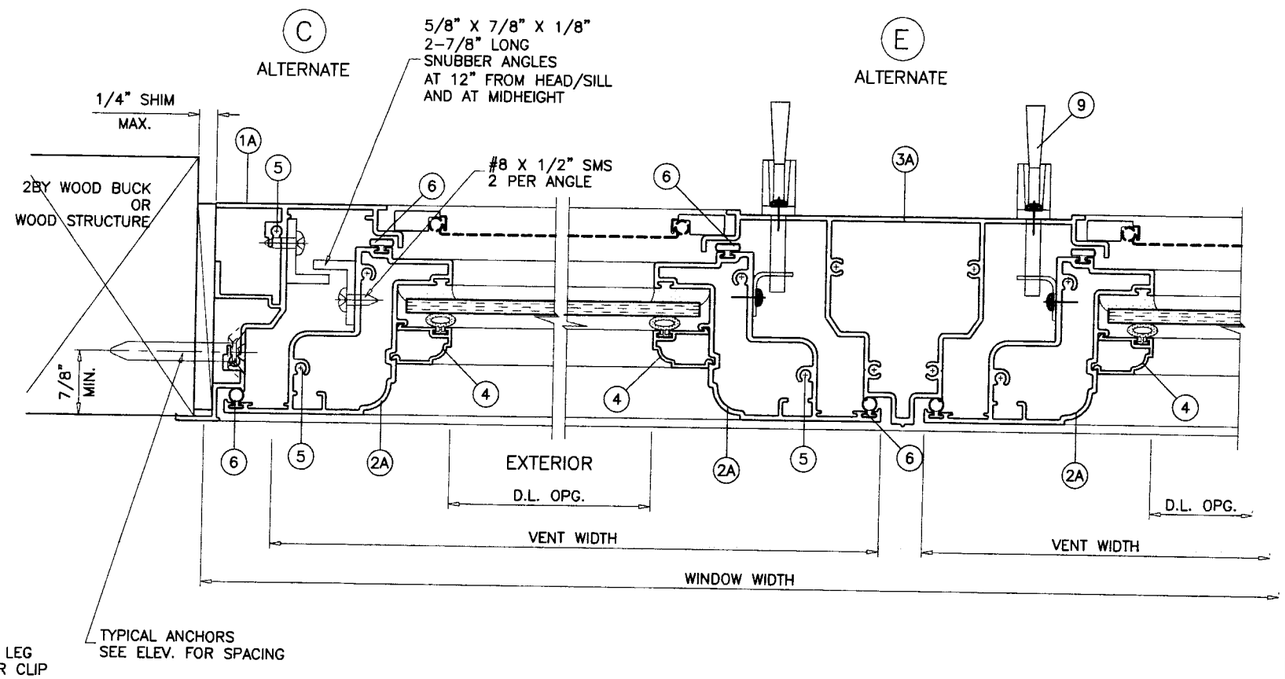

Engr: DR. HUMAYOUN FAROOQ
STRUCTURES
FLA. PE # 16557
C.A.N. 3538

JAN 2 4 2008

PRODUCT REVISED
as complying with the Florida
Building Code
Acceptance No 08-0204.01
Expiration Date 01/23/2013
By
Miami Dade Product Control
Division

AL-FAROOQ CORPORATION
ENGINEERS & PRODUCT DEVELOPMENT
1235 S.W. 87 AVE
MIAMI, FLORIDA 33174
TEL. (305) 264-8100 FAX. (305) 262-6978

COMP-ANL\W02-107YO

SERIES-1400 ALUMINUM CASEMENT WDW. (N.I.)

AWP, LLC
Manufacturers of Yale Ogron Windows and Doors
8130 N.W. 74TH AVE.
MEDLEY, FL. 33166
TEL. (305) 887-2646 FAX (305) 883-1309

revisions:

no	date	by	description
B	01.02.08		ALT. FRAME & MANF. NAME

date: 10-30-02
scale: 1/2" = 1"
dr. by: HAMID
chk. by:

drawing no.
W02-107

sheet 5 of 7

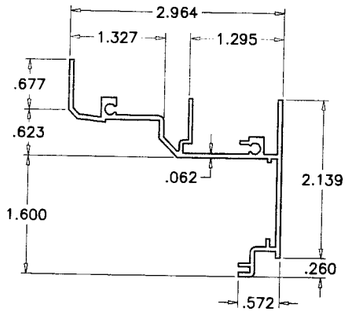

1 FRAME

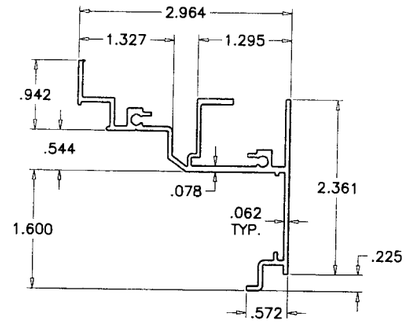

1A ALT. FRAME

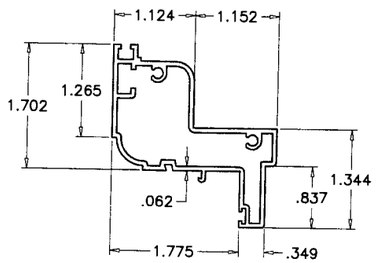

2 VENT

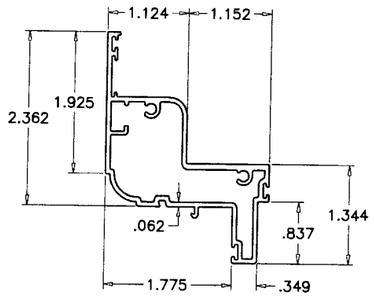

2A ALT. VENT

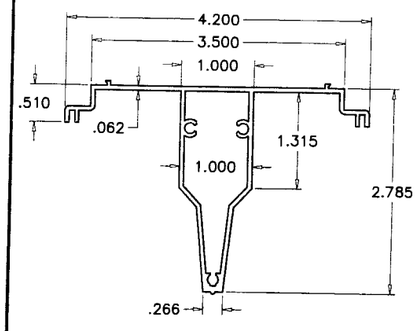

3 IMPOST

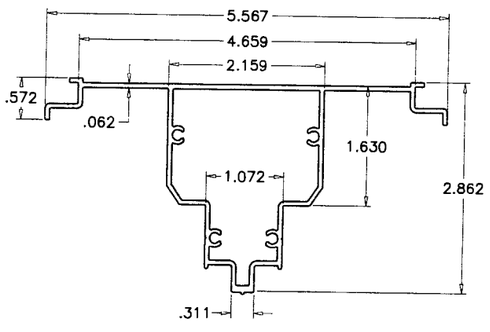

3A ALT. IMPOST

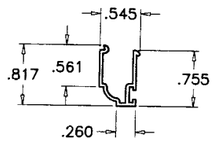

4 GLAZING BEAD

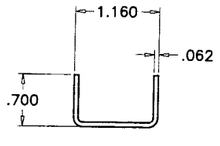

SHEAR CLIP
ALUMINUM (6063–T5 OR 3003–H14)

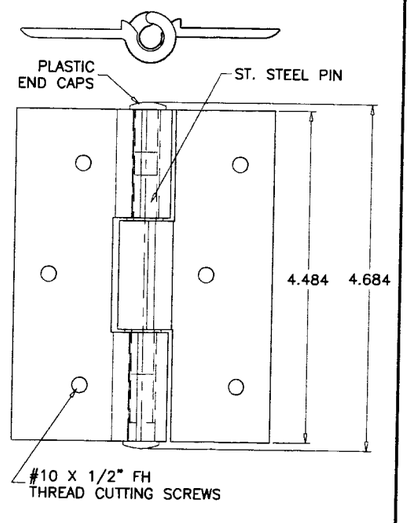

BUTT HINGE

ITEM	PART #	QUANTITY	DESCRIPTION	MATERIAL	MANF./SUPPLIER/REMARKS
1	YE–1401	4	FRAME	6063–T6	–
1A	YE–1421	4	ALT. FRAME	6063–T6	–
2	YE–1402	4	VENT	6063–T6	–
2A	YE–1420	4	ALT. VENT	6063–T6	–
3	YE–1404	1	CENTER POST	6063–T6	–
3A	YE–1424	1	ALT. CENTER POST	6063–T6	–
4	YE–1403	AS REQD.	GLAZING BEAD	6063–T6	–
5	#8 X 1"	AS REQD.	FRAME AND VENT ASSEMBLY SCREWS	–	–
6	E143	AS REQD.	BULB WEATHERSTRIPPING	VINYL	ULTRAFAB
6A	F101	AS REQD.	BULB WEATHERSTRIPPING	VINYL	ULTRAFAB
7	YH–920	AS REQD.	LEAF WEATHERSTRIPPING	VINYL	SULLIVAN & SULLIVAN
7A	E701	AS REQD.	DOUBLE LEAF WEATHERSTRIPPING	VINYL	ULTRAFAB
8	31858/31862	2/ VENT	2 BAR HINGE, AT TOP AND BOTTOM	STEEL	TRUTH
8A	YH–650	3/ VENT	BUTT HINGES (ALT. TO BAR HINGES)	–	ATTACHED W/ (6) #10 X 1/2" FH SCREWS
9	45200	2/ VENT	FACE MOUNT LOCK	STEEL	TRUTH, AT 18" FROM BOT. & 17" FROM TOP
10	31376	2/ VENT	LOCK KEEPER, AT FRAME JAMB FACING LOCK	STEEL	YALE, AT 18" FROM BOT. & 17" FROM TOP
11	45251	1/ VENT	ROTO OPERATOR	STEEL	TRUTH, AT 8" FROM ENDS
12	YH–1411	1/ CORNER	FRAME CORNER KEY	–	YALE (7/8" X 2" X 1/8" X 2" LONG)
13	YH–1408	1/ CORNER	VENT CORNER KEY	–	DECO

Engr: DR. HUMAYOUN FAROOQ
STRUCTURES
FLA. PE # 16557
C.A.N. 3538

JAN 2 4 2008

PRODUCT REVISED
as complying with the Florida
Building Code
Acceptance No 08-0204.01
Expiration Date 01/23/2013
By
Miami-Dade Product Control
Division

AL-FAROOQ CORPORATION
ENGINEERS & PRODUCT DEVELOPMENT
12235 S.W. 87 AVE
MIAMI, FLORIDA 33174
TEL. (305) 264-8100 FAX. (305) 262-6978
COMP-ANL\W02-107YO

SERIES–1400 ALUMINUM CASEMENT WDW. (N.I.)

AWP, LLC
Manufacturers of Yale Ogron Windows and Doors
8130 N.W. 74TH AVE.
MEDLEY, FL. 33166
TEL. (305) 887-2646 FAX (305) 883-1309

revisions:

no	date	by	description
A	10.31.06		UPDATED FOR 2004 FBC
B	01.02.08		ALT. FRAME & MANF. NAME

date: 10-30-02
scale: 1/2" = 1"
dr. by: HAMID
chk. by:

drawing no.
W02–107

sheet 6 of 7

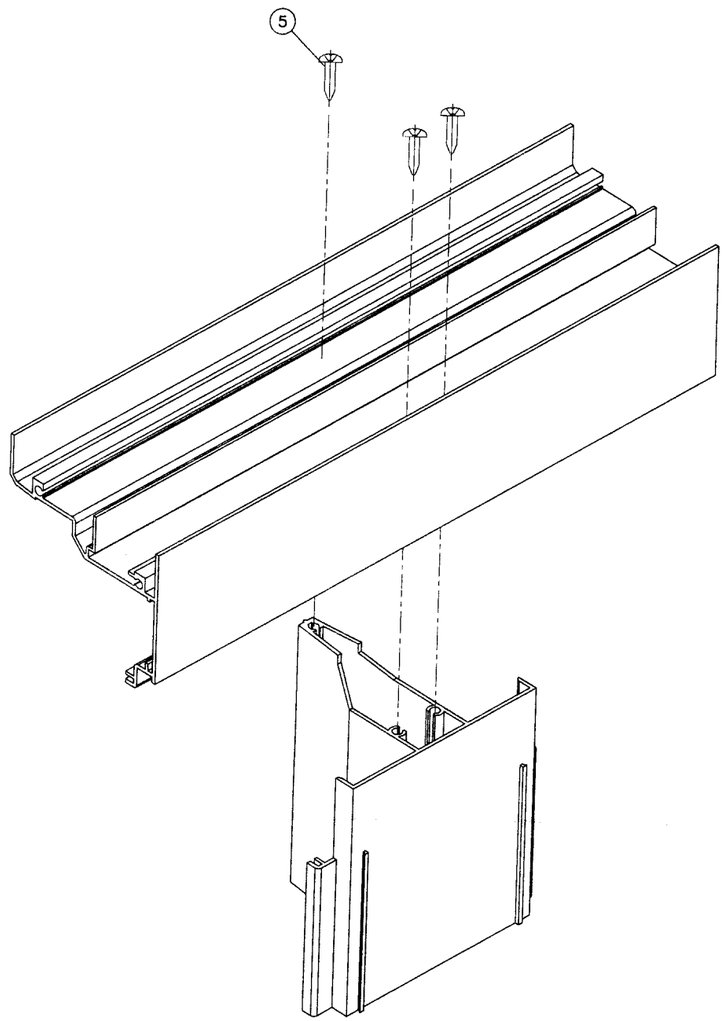

IMPOST COPING

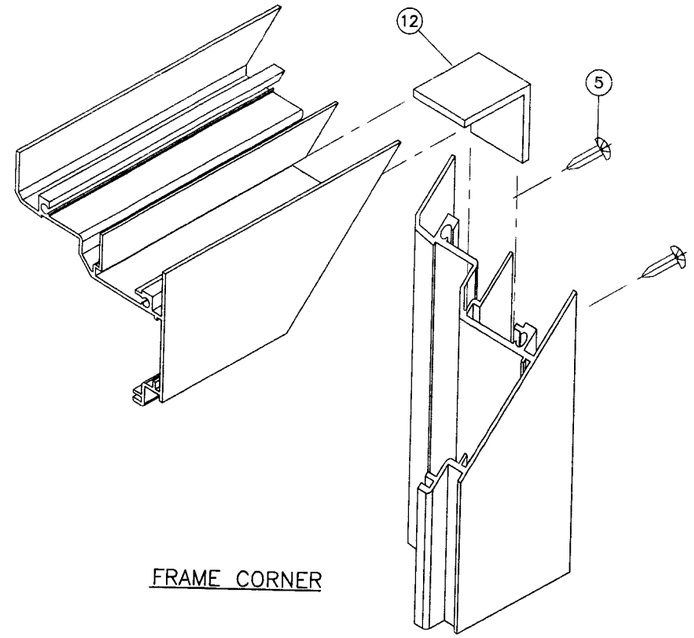

FRAME CORNER

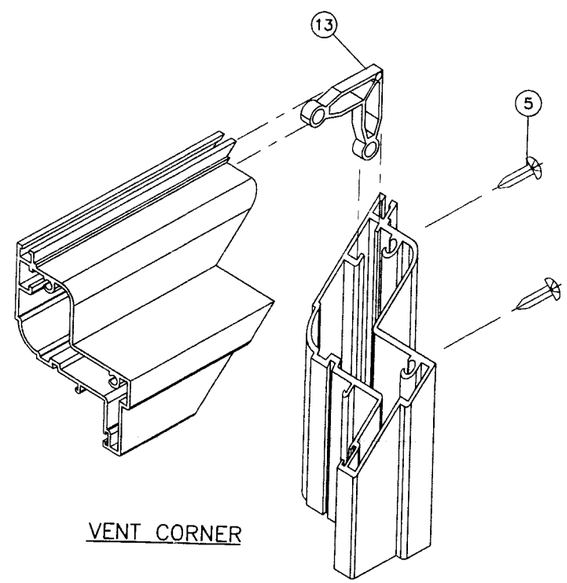

VENT CORNER

Engr: DR. HUMAYOUN FAROOQ
STRUCTURES
FLA. PE # 16557
C.A.N. 3538

JAN 24 2008

PRODUCT REVISED
as complying with the Florida Building Code
Acceptance No 08-0204.01
Expiration Date 01/23/2013
By
Miami Dade Product Control Division

AL-FAROOQ CORPORATION
ENGINEERS & PRODUCT DEVELOPMENT
1235 S.W. 87 AVE
MIAMI, FLORIDA 33174
TEL. (305) 264-8100 FAX. (305) 262-6978
COMP-ANL\W02-107YO

SERIES-1400 ALUMINUM CASEMENT WDW. (N.I.)

AWP, LLC
Manufacturers of Yale Ogron Windows and Doors
8130 N.W. 74TH AVE.
MEDLEY, FL. 33166
TEL. (305) 887-2646 FAX. (305) 883-1309

revisions:

no	date	by	description
B	01.02.08		ALT. FRAME & MANF. NAME

date: 10-30-02
scale: 1/2" = 1"
dr. by: HAMID
chk. by:

drawing no.
W02-107

sheet 7 of 7