MIAMI-DADE COUNTY
BUILDING CODE COMPLIANCE OFFICE (BCCO)
PRODUCT CONTROL DIVISION

MIAMI-DADE COUNTY, FLORIDA
METRO-DADE FLAGLER BUILDING
140 WEST FLAGLER STREET, SUITE 1603
MIAMI, FLORIDA 33130-1563
(305) 375-2901 FAX (305) 375-2908
www.buildingcodeonline.com

NOTICE OF ACCEPTANCE (NOA)

JELD-WEN, Inc.
3737 Lakeport Blvd
Klamath falls, Oregon 97601

SCOPE:
This NOA is being issued under the applicable rules and regulations governing the use of construction materials. The documentation submitted has been reviewed by Miami-Dade County Product Control Division and accepted by the Board of Rules and Appeals (BORA) to be used in Miami Dade County and other areas where allowed by the Authority Having Jurisdiction (AHJ).

This NOA shall not be valid after the expiration date stated below. The Miami-Dade County Product Control Division (In Miami Dade County) and/or the AHJ (in areas other than Miami Dade County) reserve the right to have this product or material tested for quality assurance purposes. If this product or material fails to perform in the accepted manner, the manufacturer will incur the expense of such testing and the AHJ may immediately revoke, modify, or suspend the use of such product or material within their jurisdiction. BORA reserves the right to revoke this acceptance, if it is determined by Miami-Dade County Product Control Division that this product or material fails to meet the requirements of the applicable building code.

This product is approved as described herein, and has been designed to comply with the Florida Building Code, including the High Velocity Hurricane Zone.

DESCRIPTION: Series "3800" Vinyl Sliding Glass Door– L.M.I.

APPROVAL DOCUMENT: Drawing No. **JELD0022**, titled "Series 3800 PVC, SGD", sheets 1 through 6 of 6, prepared by PTC, LLC, dated 04/04/06 and last revised on 05/16/08, signed and sealed by L. Roberto Lomas, P.E., bearing the Miami-Dade County Product Control revision stamp with the Notice of Acceptance number and expiration date by the Miami-Dade County Product Control Division.

MISSILE IMPACT RATING: Large and Small Missile Impact

LABELING: Each unit shall bear a permanent label with the manufacturer's name or logo, city, state and following statement: "Miami-Dade County Product Control Approved", unless otherwise noted herein.

RENEWAL of this NOA shall be considered after a renewal application has been filed and there has been no change in the applicable building code negatively affecting the performance of this product.

TERMINATION of this NOA will occur after the expiration date or if there has been a revision or change in the materials, use, and/or manufacture of the product or process. Misuse of this NOA as an endorsement of any product, for sales, advertising or any other purposes shall automatically terminate this NOA. Failure to comply with any section of this NOA shall be cause for termination and removal of NOA.

ADVERTISEMENT: The NOA number preceded by the words Miami-Dade County, Florida, and followed by the expiration date may be displayed in advertising literature. If any portion of the NOA is displayed, then it shall be done in its entirety.

INSPECTION: A copy of this entire NOA shall be provided to the user by the manufacturer or its distributors and shall be available for inspection at the job site at the request of the Building Official.

This NOA **revises** NOA # **06-0510.01**consists of this page 1 and evidence page E-1, as well as approval document mentioned above.

The submitted documentation was reviewed by **Ishaq I. Chanda, P.E.**

MIAMI-DADE COUNTY APPROVED

6/12/18

NOTICE OF ACCEPTANCE: EVIDENCE SUBMITTED

A. DRAWINGS

1. Manufacturer's die drawings and sections (transferred from file # **06-0510.01)**
2. Drawing No. **JELD0022**, titled "Series 3800 PVC, SGD", sheets 1 through 6 of 6, prepared by PTC, LLC, dated 04/04/06 and last revised on 05/16/08, signed and sealed by L. Roberto Lomas, P.E.

B. TESTS

1. Test reports on 1) Air Infiltration Test, per FBC, TAS 202-94
   2) Uniform Static Air Pressure Test, Loading per FBC, TAS 202-94
   3) Water Resistance Test, per FBC, TAS 202-94
   4) Large Missile Impact Test per FBC, TAS 201-94,
   5) Cyclic Wind Pressure Loading per FBC, TAS 203-94

   along with marked-up drawings and installation diagram of PVC sliding glass door, prepared by National Certified Testing Laboratories, Test Report No. **NCTL-210-3261-1**, dated 12/12/05, signed and sealed by Gerard J. Ferrara, P.E.
2. Test reports on (transferred from file # **06-0510.16)**
   1) Air Infiltration Test, per FBC, TAS 202-94
   2) Uniform Static Air Pressure Test, Loading per FBC, TAS 202-94
   3) Water Resistance Test, per FBC, TAS 202-94
   4) Forced Entry Resistant per FBC, TAS 202-94
   4) Large Missile Impact Test per FBC, TAS 201-94,
   5) Cyclic Wind Pressure Loading per FBC, TAS 203-94

   along with marked-up drawings and installation diagram of PVC sliding glass door, prepared by National Certified Testing Laboratories, Test Report No. **NCTL-210-3216-1, 2 & 3**, dated 12/12/05, signed and sealed by Gerard J. Ferrara, P.E.

C. CALCULATIONS (transferred from file # **06-0510.16)**

1. Anchor verification calculations dated 05/01/06, prepared by PTC, LLC, signed and sealed by Luis R. Lomas, P.E.
2. Complies ASTM-E1300-02

D. QUALITY ASSURANCE

1. Miami Dade Building Code Compliance Office (BCCO).

E. MATERIAL CERTIFICATIONS

1. Notice of Acceptance No. **07-1116.04** issued to E.I. DuPont De Nemours & CO., Inc. for "DuPont SentryGlas ® Plus", expiring on 01/14/2012.
2. Notice of Acceptance No. 06-1220.01, issued to Spectus Systems-A Mikron Company "White PVC Rigid", expiring on 12/26/11.

F. STATEMENTS (transferred from file # **06-0510.01)**

1. Statement letters of Compliance and "no financial interest", both dated 05/01/06, signed and sealed by Luis R. Lomas, P.E.
2. Statement letter of lab compliance, part of the above referenced test reports.

G. OTHER

1. This NOA **revises** NOA # ***06-0510.01,*** **expiring 08/10/2011.**
2. Test proposal (e-mail) dated 08-14-07, approved by BCCO.

Ishaq I. Chanda

Ishaq I. Chanda, P.E.
Product Control Examiner
NOA No 08-0206.02
Expiration Date: August 10, 2011
Approval Date: July 03, 2008

TABLE OF CONTENTS	
SHEET	SHEET DESCRIPTION
1	ELEVATIONS & GENERAL NOTES
2	ANCHORING DETAILS
3	VERTICAL CROSS SECTIONS
4	HORIZONTAL CROSS SECTIONS
5	BILL OF MATERIAL & GLAZING
6	UNIT COMPONENTS

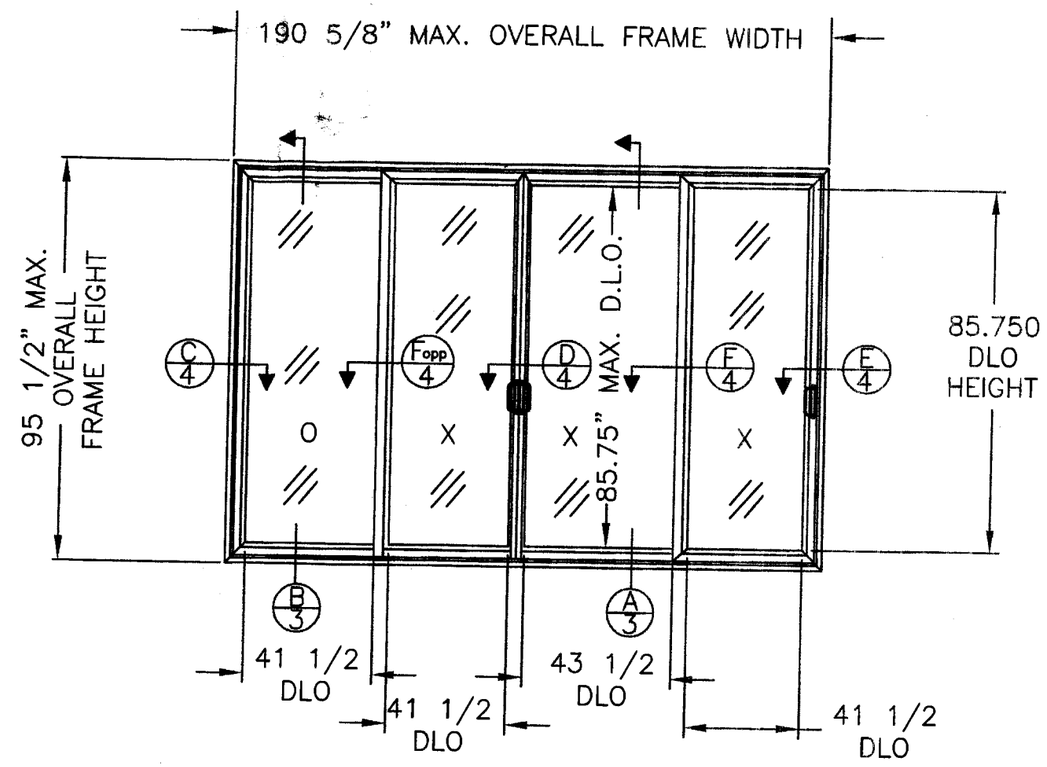

PREMIUM ATLANTIC VINYL (3800) SLIDING PATIO DOOR OXXX
ACTIVE PANEL = 48-5/8" X 92-7/8"
ACTIVE PANEL W/ ASTRAGAL = 50-5/8" X 92-7/8"
FIXED PANEL = 48-5/8" X 92-7/8"

DESIGN PRESSURE RATING
±50 PSF

GENERAL NOTES:

1) THE PRODUCT SHOWN HEREIN IS DESIGNED AND MANUFACTURED TO COMPLY WITH THE 2004 FLORIDA BUILDING CODE INCLUDING 2005, 2006 AND 2007 SUPPLEMENTS.
2) 1X AND 2X WOOD BUCK OR STUD FRAMING TO BE DESIGNED AND ANCHORED TO PROPERLY TRANSFER ALL LOADS TO STRUCTURE, BUCK OR FRAMING IS RESPONSIBILITY OF ARCHITECT OR ENGINEER OF RECORD FOR THE PROJECT OF INSTALLATION.
3) PRODUCTS ARE APPROVED FOR USE WHERE LARGE MISSILE IMPACT RESISTANCE IS REQUIRED. IMPACT PROTECTIVE SYSTEM IS NOT REQUIRED.
4) SEE ELEVATIONS FOR DESIGN PRESSURE RATINGS.

PRODUCT REVISED
as complying with the Florida Building Code
Acceptance No 08-0206-02
Expiration Date AUG 10, 2011
By Shaq I. Chanda
Miami Dade Product Control Division

SYM	REVISION	DATE	BY
B	UPDATE PER MIAMI-DADE	03/31/08	CB
A	ADDED SILL RISER	01/23/08	CB

L. Roberto Lomas
Florida P.E. No. 62514
5/16/08
PTC, LLC
1535 Cogswell Street, suite C25
Rockledge, Florida 32955
FBPE Certificate of Authorization NO. 25935

JELD-WEN, INC.
355 CENTER CT. VENICE, FL. 34285

TITLE: SERIES 3800 PVC SGD LARGE MISSILE IMPACT ELEVATIONS AND GENERAL NOTES

PREPARED BY:	DRN: BB	DATE: 4/4/06
PTC, LLC	SCALE: N.T.S.	DWG. NO: JELD0022
Phone 772.398.4639 Fax 772.398.4654	REV: A	SHEET: 1 OF 6

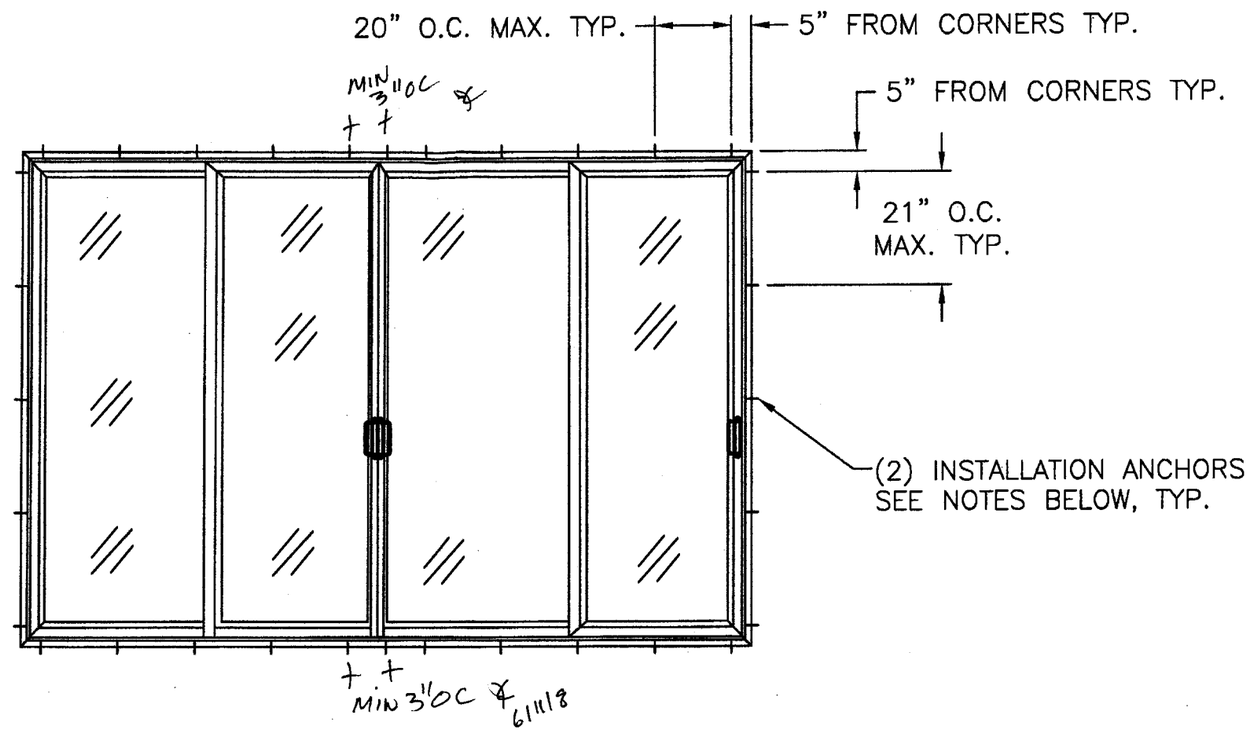

PREMIUM ATLANTIC VINYL (3800) SLIDING PATIO DOOR
EXTERIOR ELEVATION

NOTES:

1) SHIM AS REQUIRED AT EACH ANCHOR LOCATION USING LOAD BEARING SHIMS. MAXIMUM ALLOWABLE SHIM STACK TO BE 1/4". SHIM WHERE SPACE GREATER THAN 1/16" IS PRESENT.

2) FOR WOOD FRAMING INSTALLATION USE (2) #10 WOOD SCREWS WITH SUFFICIENT LENGTH TO ACHIEVE 1 1/2" MINIMUM EMBEDMENT INTO FRAMING.

3) FOR MASONRY INSTALLATION USE (2) 3/16" DIAMETER ELCO TAPCONS WITH SUFFICIENT LENGTH TO ACHIEVE 1 1/4" MINIMUM EMBEDMENT INTO MASONRY WITH A 1 7/8" MINIMUM EDGE DISTANCE.

4) LOCATE ANCHORS AT HEAD AND SILL 5" MAX. FROM EACH END AND 20" MAX. O.C. THEREAFTER. AT JAMBS 5" MAX. FROM EACH END AND 21" MAX. O.C. THEREAFTER.

5) THERE ARE TWO INSTALLATION ANCHORS AT EACH LOCATION SHOWN ABOVE. EXTERIOR ROW OF ANCHORS IS LOCATED 2 1/4" IN FROM EXTERIOR FRAME EDGE. INTERIOR ROW OF ANCHORS IS LOCATED 1 1/4" IN FROM INTERIOR FRAME EDGE.

PRODUCT REVISED
as complying with the Florida Building Code
Acceptance No 08-0206.02
Expiration Date AUG 10, 2011
By Ishag I. Chanda
Miami Dade Product Control Division

SYM	REVISION	DATE	BY
B	UPDATE PER MIAMI-DADE	03/31/08	CB
A	ADDED SILL RISER	01/23/08	CB

L. Roberto Lomas
Florida P.E. No. 62514
5/16/08
PTC, LLC
1535 Cogswell Street, suite C25
Rockledge, Florida 32955
FBPE Certificate of Authorization NO. 25935

JELD-WEN, INC.
355 CENTER CT. VENICE, FL. 34285

TITLE: SERIES 3800 PVC SGD LARGE MISSILE IMPACT ANCHOR ELEVATIONS AND ANCHORING NOTES

PREPARED BY: PTC, LLC
Phone 772.398.4639 Fax 772.398.4654

DRN: BB	DATE: 4/4/06
SCALE: N.T.S.	DWG. NO: JELD0022
REV: A	SHEET: 2 OF 6

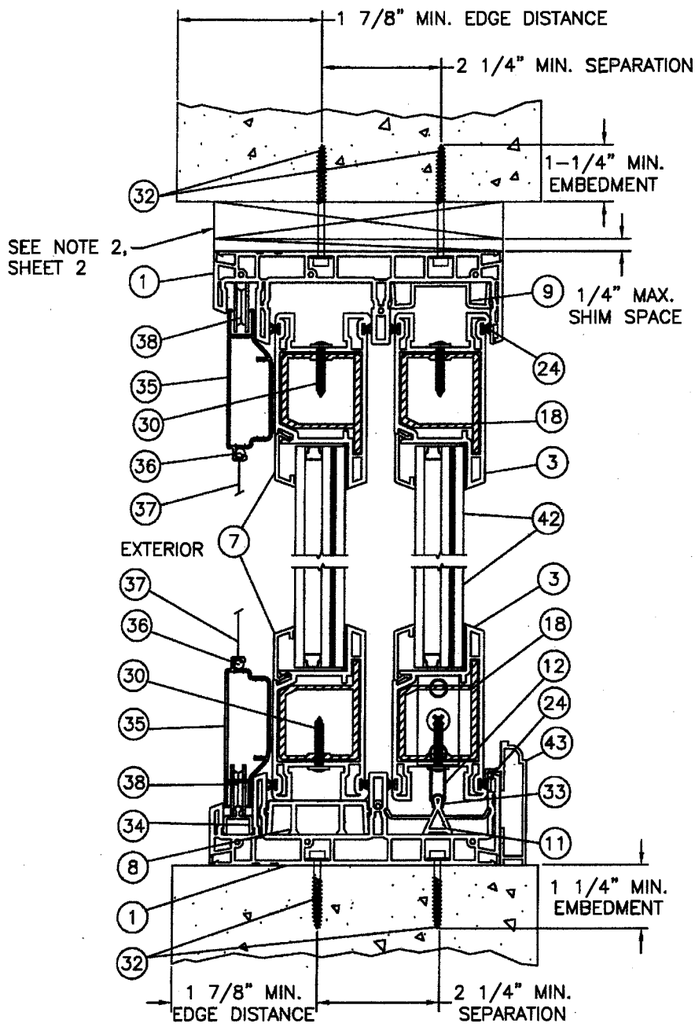

A/3 VERTICAL CROSS SECTION W/1X BUCK AT HEADER

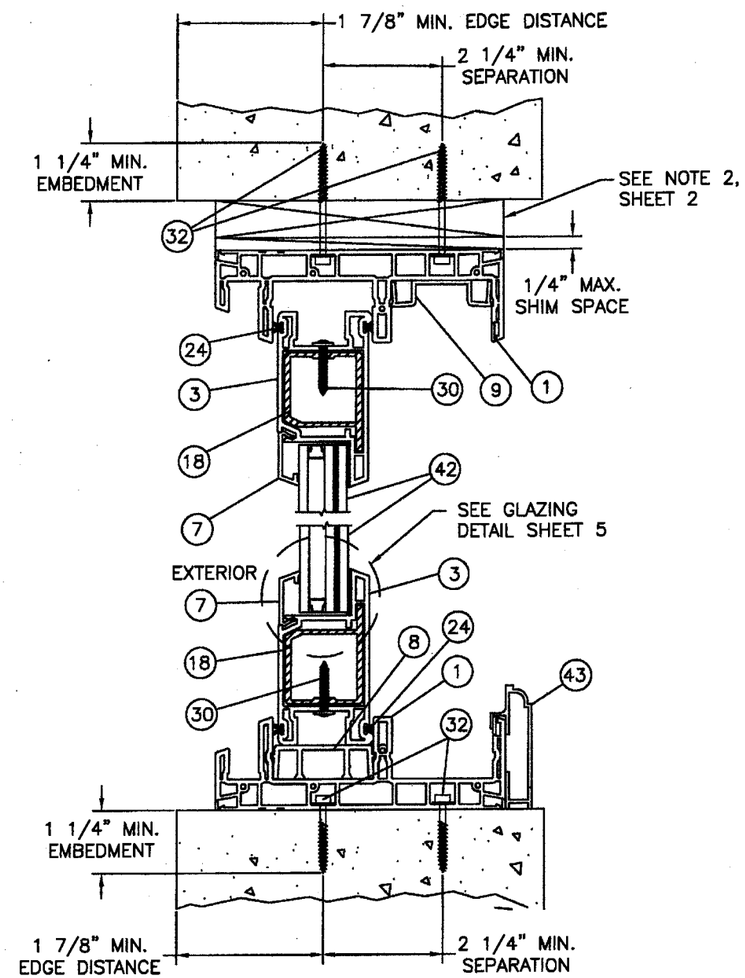

B/3 VERTICAL CROSS SECTION W/1X BUCK AT HEADER

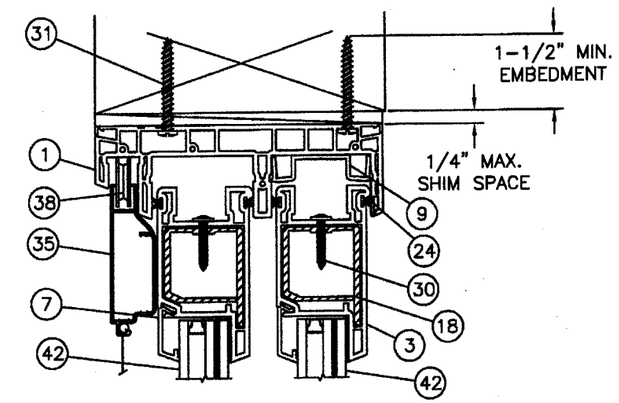

A/3 VERTICAL CROSS SECTION AT HEADER ONLY, STUD CONSTRUCTION

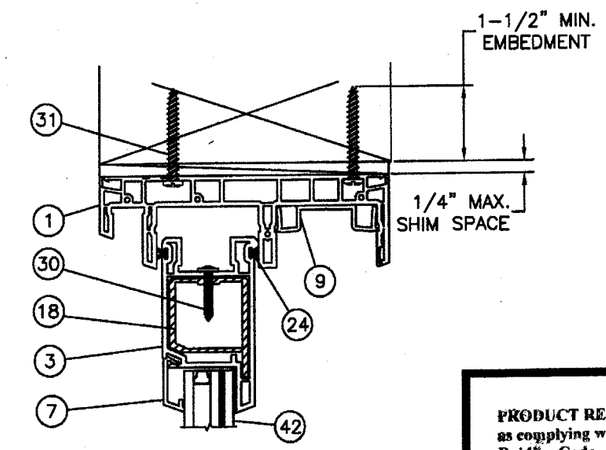

B/3 VERTICAL CROSS SECTION AT HEADER ONLY, STUD CONSTRUCTION

PRODUCT REVISED
as complying with the Florida Building Code
Acceptance No 08-0206.02
Expiration Date AUG 10, 2011
By Ishag I. Chaude
Miami Dade Product Control Division

SYM	REVISION	DATE	BY
B	UPDATE PER MIAMI-DADE	03/28/08	CB
A	ADDED SILL RISER	01/23/08	CB

L. Roberto Lomas
Florida P.E. No. 62514
5/16/08

PTC, LLC
1535 Cogswell Street, suite C25
Rockledge, Florida 32955
FBPE Certificate of Authorization NO. 25935

JELD-WEN, INC.
355 CENTER CT. VENICE, FL. 34285

TITLE: SERIES 3800 PVC SGD LARGE MISSILE IMPACT VERTICAL CROSS SECTIONS

PREPARED BY: PTC, LLC
Phone 772.398.4639 Fax 772.398.4654

DRN: BB	DATE: 4/4/06
SCALE: N.T.S.	DWG. NO: JELD0022
REV: A	SHEET: 3 OF 6

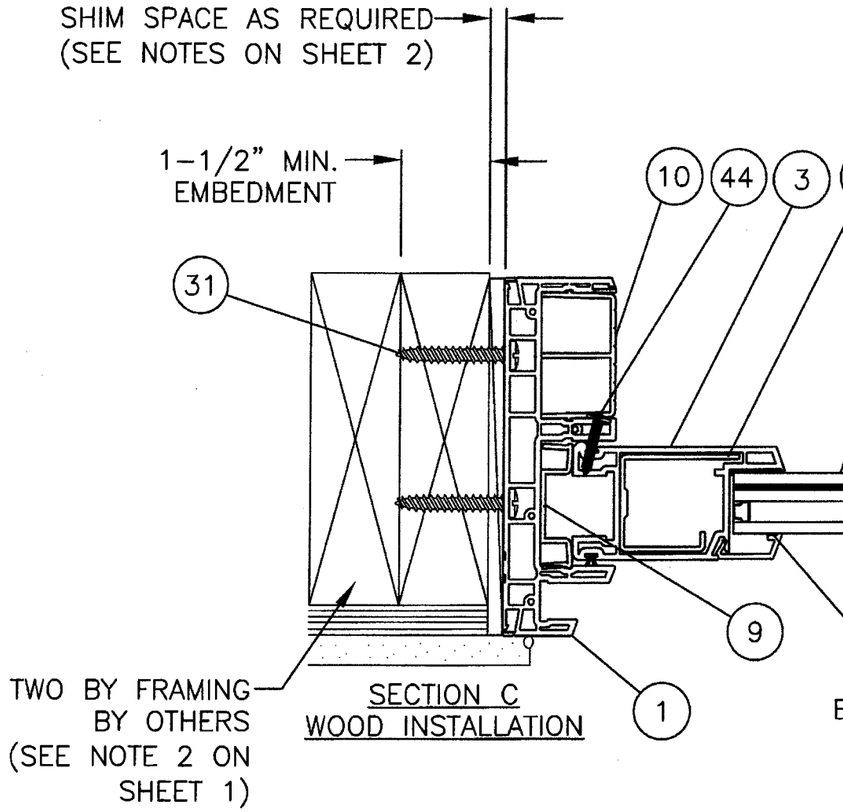

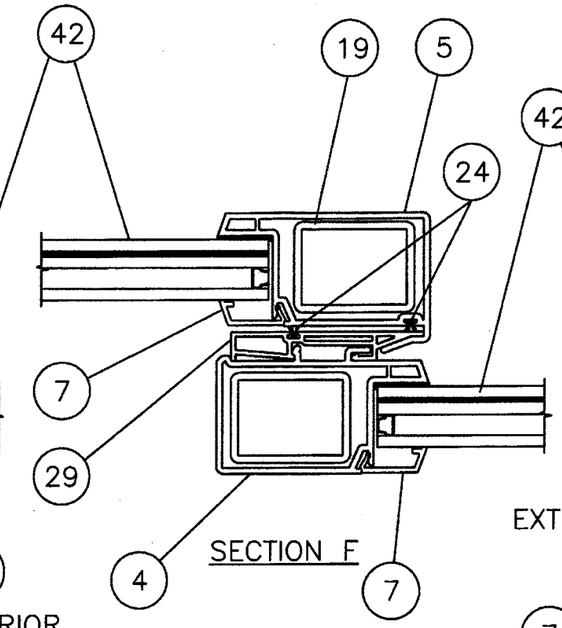

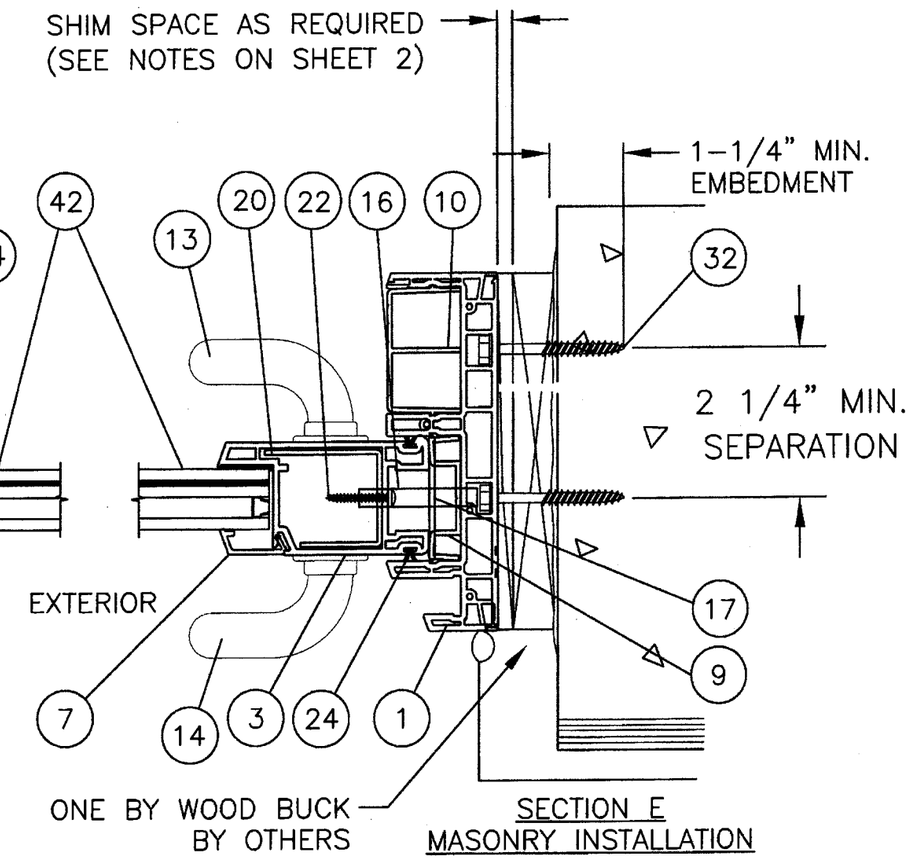

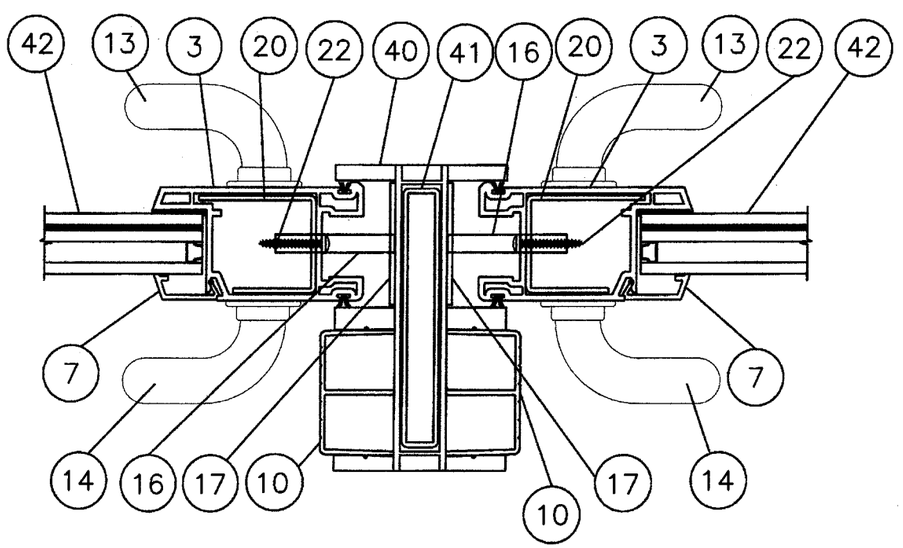

SECTION D

PRODUCT REVISED
as complying with the Florida Building Code
Acceptance No 08-0206.02
Expiration Date AUG 10, 2011
By Ishaq I. Chanda
Miami Dade Product Control Division

SYM	REVISION	DATE	BY
B	UPDATE PER MIAMI-DADE	03/31/08	CB
A	ADDED SILL RISER	01/23/08	CB

L. Roberto Lomas
Florida P.E. No. 62514
5/16/08

PTC, LLC
1535 Cogswell Street, suite C25
Rockledge, Florida 32955
FBPE Certificate of Authorization NO. 25935

JELD-WEN, INC.
355 CENTER CT. VENICE, FL. 34285

TITLE: SERIES 3800 PVC SGD LARGE MISSILE IMPACT HORIZONAL CROSS SECTIONS

PREPARED BY: PTC, LLC
Phone 772.398.4639 Fax 772.398.4654

DRN:	DATE:
BB	4/4/06
SCALE: N.T.S.	DWG. NO: JELD0022
REV: A	SHEET: 4 OF 6

BILL OF MATERIALS

NO.	PART NO.	DESCRIPTION	MATERIAL	VENDOR
1	7700/ 8591	FRAME (NOA 06-1220.01)	PVC	MIKRON
3	771	PANEL STILE/ RAIL (NOA 06-1220.01)	PVC	MIKRON
4	7702	FIXED INTERLOCK STILE	PVC	MIKRON
5	7703	PANEL INTERLOCK STILE	PVC	MIKRON
7	7706	1" INSULATING GLAZING BEAD	PVC	MIKRON
8	7707	RISER BLOCK		MIKRON
9	7708	ANTI LIFT		MIKRON
10	7709	THRESHOLD		MIKRON
11	7705	PANEL TRACK		MIKRON
12		ROLLER HOUSING ASSEMBLY		
13	6635-10MW-02	INSIDE HANDLE (6635-10AD-02 DESERT SAND)		AMESBURY
14	6635-10MW-02	OUTSIDE HANDLE (6635-10AD-02 DESERT SAND)		DOOR HARDWARE
15	6600-082-01	THUMB TURN MORTISE LOCK		
16	6570-1063	SINGLE POINT LOCK		
17	6690-10XX	STRIKE PLATE		
18	7701.1.1	TOP & BOTTOM RAIL REINFORCING BAR 6063-T5		MIKRON
19	7703.2.1	ACTIVE & FIXED INTERLOCK REINFORCING STEEL		MIKRON
20	7701.2.1	LOCK STILE REINFORCING 12 GA. GALVANIZED STEEL		MIKRON
21	7701.1	FIXED LOCK STILE REINFORCING 6063-T5		MIKRON
22		U CHANNEL REINFORCING SCREW #8 X 1" WH STS		
24		BRUSH TYPE WEATHERSTRIPPING		
25		SWIGGLE SPACER		
26		EDGE TECH SPACER		
28		DOW CORNING 995 SEALANT		
29	7704	FIXED INTERLOCK ADDER	PVC	MIKRON
30		#8 X 1" WASHER HEAD STS		
31		#10 X 1-1/2" PH WOOD SCREW W/MIN 1-1/2" EMBEDMENT		
32		3/16" DIA. ELCO TAPCON W/ MIN. 1 1/4" EMBEDMENT		
33		STAINLESS STEEL TRACK COVER		
34		SCREEN TRACK		
35		SCREEN FRAME		
36		SCREEN SPLINE		
37		SCREEN MESH		
38		SCREEN ROLLER		
39		SINGLE POINT LOCK		
40	7964	ASTRAGAL		
41	7964.1.1	ASTRAGAL REINFORCEMENT ALUMINUM 6063-T6		MIKRON
42		1" INSUL. GLASS: 3/16" TEMPERED, 0.346" AIR SPACE W/ CARDINAL SPACER, 3/16" ANNEALED CLEAR GLASS, 0.090" SENTRYGLAS PLUS BY DUPONT, 3/16" CLEAR ANNEALED GLASS LAMINATED BY CARDINAL		
43	D-13386	2.50" SILL RISER - (6063-T6 ALUMINUM) (OPTIONAL)		EXTRUDERS
44		#10 X 1" FLAT HEAD SHEET METAL SCREW		

NOTE:
RIGID WHITE PVC BY MIKRON IS UNDER SEPARATE N.O.A.

1" INSUL. GLASS: 3/16" TEMPERED, 0.346" AIR SPACE W/ CARDINAL SPACER, 3/16" ANNEALED CLEAR GLASS, 0.090" SENTRYGLAS PLUS BY DUPONT, 3/16" CLEAR ANNEALED GLASS LAMINATED BY CARDINAL

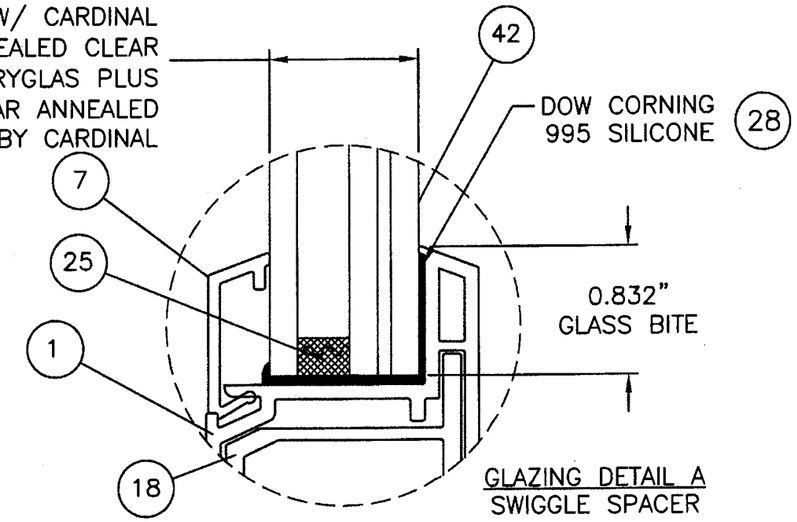

GLAZING DETAIL A
SWIGGLE SPACER

1" INSUL. GLASS: 3/16" TEMPERED, 0.346" AIR SPACE W/ CARDINAL SPACER, 3/16" ANNEALED CLEAR GLASS, 0.090" SENTRYGLAS PLUS BY DUPONT, 3/16" CLEAR ANNEALED GLASS LAMINATED BY CARDINAL

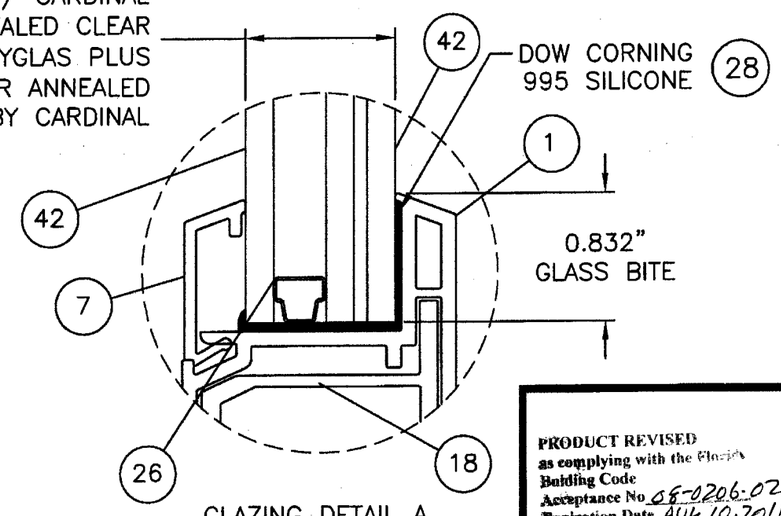

GLAZING DETAIL A
EDGE TECH SPACER

PRODUCT REVISED
as complying with the Florida
Building Code
Acceptance No. 08-0206.02
Expiration Date AUG 10, 2011
By Ichag I. Chanda
Miami Dade Product Control
Division

SYM	REVISION	DATE	BY
B	UPDATE PER MIAMI-DADE	03/31/08	CB
A	ADD SILL RISER	01/23/08	CB

L. Roberto Lomas
Florida P.E. No. 62514
5/16/08

PTC, LLC
1535 Cogswell Street, suite C25
Rockledge, Florida 32955
FBPE Certificate of Authorization NO. 25935

JELD-WEN, INC.
355 CENTER CT. VENICE, FL. 34285

TITLE: SERIES 3800 PVC SGD LARGE MISSILE IMPACT BILL OF MATERIAL & GLAZING

PREPARED BY: PTC, LLC
Phone 772.398.4639 Fax 772.398.4654

DRN:	DATE:
BB	4/4/06
SCALE: N.T.S.	DWG. NO: JELD0022
REV: A	SHEET: 5 OF 6

(1) FRAME TYP. WALL THICKNESS 0.100

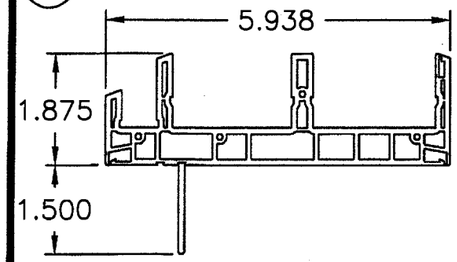

ACTIVE & FIXED INTERLOCK REINFORCEMENT TYP. WALL THICKNESS 0.125

(18)

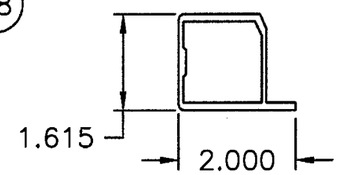

PANEL STILE TYP. WALL THICKNESS 0.060

(3)

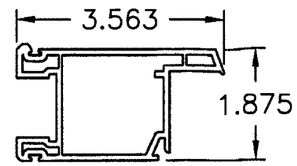

(4) FIXED INTERLOCK TYP. WALL THICKNESS 0.100

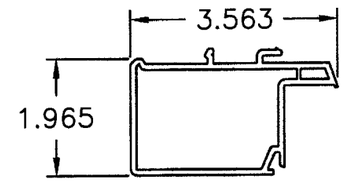

(5) PANEL INTERLOCK TYP. WALL THICKNESS 0.100

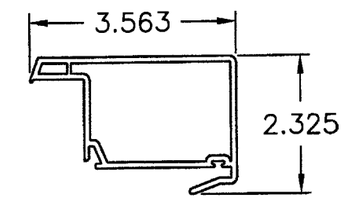

SCREEN FRAME TYP. WALL THICKNESS 0.050 (35)

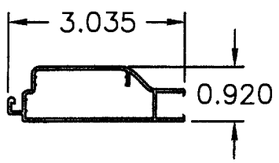

1" GLAZING BEAD TYP WALL THICKNESS 0.080

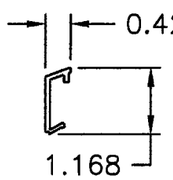

(7)

RISER BLOCK TYP. WALL THK. 0.100

(8)

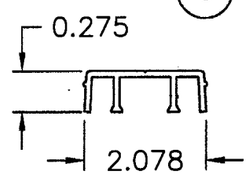

ANTI-LIFT TYP WALL THICKNESS 0.080

(9)

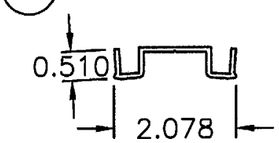

THRESHOLD TYP. WALL THICKNESS 0.080

(10)

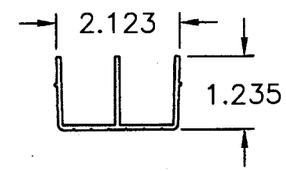

PANEL TRACK TYP. WALL THICKNESS 0.080

(11)

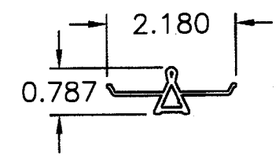

SCREEN TRACK TYP. WALL THICKNESS 0.060 (34)

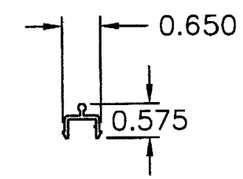

ACTIVE & FIXED INTERLOCK REINFORCEMENT TYP. WALL THICKNESS 0.125

(19)

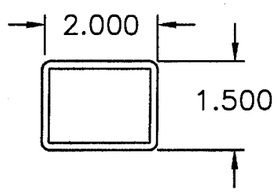

LOCK STILE REINFORCEMENT TYP. WALL THICKNESS 0.105

(20)

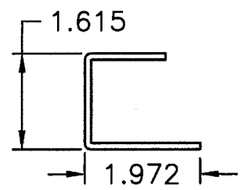

FIXED STILE REINFORCEMENT TYP. WALL THICKNESS 0.080

(21)

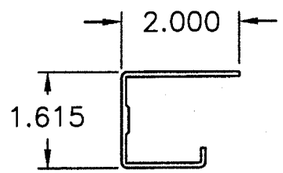

FIXED INTERLOCK ADDER TYP. WALL THICKNESS 0.075

(29)

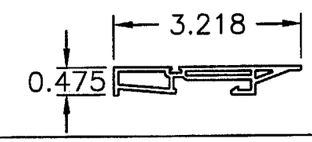

OXXO, OXO ASTRAGAL REINFORCEMENT TYP. WALL THICKNESS 0.080

(41)

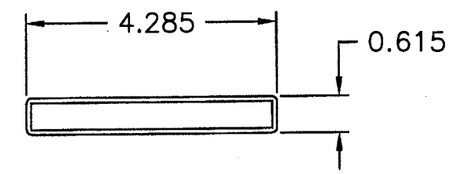

(40) ASTRAGAL TYP. WALL THICKNESS 0.100

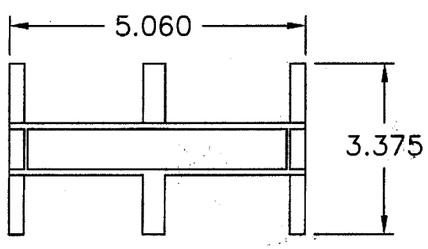

(43) 2.50" SILL RISER TYP. WALL THICKNESS 0.070

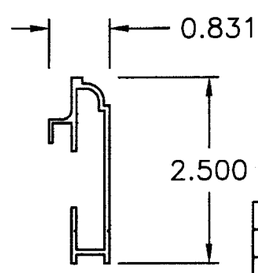

PRODUCT REVISED
as complying with the Florida Building Code
Acceptance No. 08-0206.02
Expiration Date Aug 10, 2011
By Ishwar L. Chanda
Miami Dade Product Control Division

SYM	REVISION	DATE	BY
B	UPDATE PER MIAMI-DADE	03/31/08	CB
A	ADDED SILL RISER	01/23/08	CB

L. Roberto Lomas
Florida P.E. No. 62514
5/16/08

PTC, LLC
1535 Cogswell Street, suite C25
Rockledge, Florida 32955
FBPE Certificate of Authorization NO. 25935

JELD-WEN, INC.
355 CENTER CT. VENICE, FL. 34285

TITLE: SERIES 3800 PVC SGD LARGE MISSILE IMPACT COMPONENTS

PREPARED BY: PTC, LLC
Phone 772.398.4639 Fax 772.398.4654

DRN: BB	DATE: 4/4/06
SCALE: N.T.S.	DWG. NO: JELD0022
REV: A	SHEET: 6 OF 6