MIAMI-DADE COUNTY, FLORIDA
METRO-DADE FLAGLER BUILDING
140 WEST FLAGLER STREET, SUITE 1603
MIAMI, FLORIDA 33130-1563
(305) 375-2901 FAX (305) 372-6339
www.miamidade.gov/buildingcode

BUILDING CODE COMPLIANCE OFFICE (BCCO)
PRODUCT CONTROL DIVISION

NOTICE OF ACCEPTANCE (NOA)

Lüxbau, LLC
2400 Centrepark West Dr.
Suite # 150
West Palm Beach, FL 33409

SCOPE:

This NOA is being issued under the applicable rules and regulations governing the use of construction materials. The documentation submitted has been reviewed by Miami-Dade County Product Control Division and accepted by the Board of Rules and Appeals (BORA) to be used in Miami Dade County and other areas where allowed by the Authority Having Jurisdiction (AHJ).

This NOA shall not be valid after the expiration date stated below. The Miami-Dade County Product Control Division (In Miami Dade County) and/or the AHJ (in areas other than Miami Dade County) reserve the right to have this product or material tested for quality assurance purposes. If this product or material fails to perform in the accepted manner, the manufacturer will incur the expense of such testing and the AHJ may immediately revoke, modify, or suspend the use of such product or material within their jurisdiction. BORA reserves the right to revoke this acceptance, if it is determined by Miami-Dade County Product Control Division that this product or material fails to meet the requirements of the applicable building code.

This product is approved as described herein, and has been designed to comply with the Florida Building Code, including the High Velocity Hurricane Zone.

DESCRIPTION: Series "European System" 10'0" W/E Outswing Glazed Wood French Door – L.M.I.

APPROVAL DOCUMENT: Drawing No. **1191,** titled "Wooden European Door System", sheets 1 through 6 of 6, dated 12/23/2002, with revision A1, prepared by W.W. Schaefer Engineering & Consulting, P.A., dated 04/11/2008, signed and sealed by Warren W. Schaefer, P.E., bearing the Miami-Dade County Product Control Renewal stamp with the Notice of Acceptance number and expiration date by the Miami-Dade County Product Control Division.

MISSILE IMPACT RATING: Large and Small Missile Impact Resistant

LABELING: Each unit shall bear a permanent label with the manufacturer's name or logo, city, state and following statement: "Miami-Dade County Product Control Approved", unless otherwise noted herein.

REVISION of this NOA shall be considered after a renewal application has been filed and there has been no change in the applicable building code negatively affecting the performance of this product.

TERMINATION of this NOA will occur after the expiration date or if there has been a revision or change in the materials, use, and/or manufacture of the product or process. Misuse of this NOA as an endorsement of any product, for sales, advertising or any other purposes shall automatically terminate this NOA. Failure to comply with any section of this NOA shall be cause for termination and removal of NOA.

ADVERTISEMENT: The NOA number preceded by the words Miami-Dade County, Florida, and followed by the expiration date may be displayed in advertising literature. If any portion of the NOA is displayed, then it shall be done in its entirety.

INSPECTION: A copy of this entire NOA shall be provided to the user by the manufacturer or its distributors and shall be available for inspection at the job site at the request of the Building Official.

This NOA **renews NOA # 03-0415.01** and consists of this page 1 and evidence pages E-1 and E-2, as well as approval document mentioned above.

The submitted documentation was reviewed by **Jaime D. Gasçon, P.E.**

MIAMI-DADE COUNTY APPROVED

J. Gascon 4/17/08

NOTICE OF ACCEPTANCE: EVIDENCE SUBMITTED

A. DRAWINGS

1. Manufacturer's die drawings and sections.
2. Drawing No **1191**, titled "Wooden European Door System", sheets 1 through 6 of 6, dated 12/23/2002, with revision A1, prepared by W.W. Schaefer Engineering & Consulting, P.A., dated 04/11/2008, signed and sealed by Warren W. Schaefer, P.E.

B. TESTS

1. Test reports on: 1) Air Infiltration Test, per FBC, TAS 202-94
   2) Uniform Static Air Pressure Test, Loading per FBC, TAS 202-94
   3) Water Resistance Test, per FBC, TAS 202-94
   4) Large Missile Impact Test per FBC, TAS 201-94
   5) Cyclic Wind Pressure Loading per FBC, TAS 203-94
   6) Forced Entry Test, per FBC 2411 3.2.1 and TAS 202-94

   Along with marked-up drawings and installation diagram of a Wooden European Door System, prepared by Hurricane Test Laboratory, Test Report No. **HTL 0271-1125-02** dated 11/22/02, signed and sealed by Vinu Abraham, P.E.
   "Submitted under NOA# 03-0415.01"
2. Test reports on: 1) Air Infiltration Test, per FBC, TAS 202-94
   2) Uniform Static Air Pressure Test, Loading per FBC, TAS 202-94
   3) Water Resistance Test, per FBC, TAS 202-94
   4) Large Missile Impact Test per FBC, TAS 201-94
   5) Cyclic Wind Pressure Loading per FBC, TAS 203-94
   6) Forced Entry Test, per FBC 2411 3.2.1 and TAS 202-94

   Along with marked-up drawings and installation diagram of a Wooden European Door System, prepared by Hurricane Test Laboratory, Test Report No. **HTL 0271-0721-02** dated 7/23/02, signed and sealed by Vinu Abraham, P.E.
   "Submitted under NOA# 03-0415.01"
3. Test reports on: 1) Air Infiltration Test, per FBC, TAS 202-94
   2) Uniform Static Air Pressure Test, Loading per FBC, TAS 202-94
   3) Water Resistance Test, per FBC, TAS 202-94
   4) Large Missile Impact Test per FBC, TAS 201-94
   5) Cyclic Wind Pressure Loading per FBC, TAS 203-94
   6) Forced Entry Test, per FBC 2411 3.2.1 and TAS 202-94

   Along with marked-up drawings and installation diagram of a Wooden European Door System, prepared by Hurricane Test Laboratory, Test Report No. **HTL 0271-0206-02** dated 2/15/02, signed and sealed by Vinu Abraham, P.E.
   "Submitted under NOA# 03-0415.01"

Jaime D. Gasçon, P.E.
Chief, Product Control Division
NOA No. 08-0206.11
Expiration Date: July 17, 2013
Approval Date: May 08, 2008

NOTICE OF ACCEPTANCE: EVIDENCE SUBMITTED

C. CALCULATIONS

1. Anchor verification calculations and structural analysis, complying with FBC-2004, prepared by W.W. Schaefer Engineering & Consulting, P.A., dated 02/07/2003, with the latest revision, dated 02/26/2008, signed and sealed by Warren W. Schaefer, P.E. **Complies with ASTM E1300-02**

D. QUALITY ASSURANCE

1. Miami Dade Building Code Compliance Office (BCCO).

E. MATERIAL CERTIFICATIONS

1. Notice of Acceptance No. **07-1116.04** issued to E.I. DuPont DeNemours & CO., Inc. for "**DuPont Sentry Glass Plus**" dated January 03, 2008, expiring on January 14, 2012.

F. STATEMENTS

1. Statement letter of independence, conformance and no financial interest, dated February 27, 2008, signed and sealed by Warren W. Schaefer, P.E.
2. Laboratory compliance letter for Test Report no. **HTL-0271-1125-02, 0271-0721-02 and 0271-0206-02**, issued by Hurricane Test Laboratory, Inc., dated April 11, 2003, signed and sealed by Vinu J. Abraham, P.E.

G. OTHERS

1. Notice of Acceptance No. **03-0415.01**, issued to Lüxbau, LLC for their Series "Lüxbaum Windows & Doors Wooden European Door System", approved on 07/17/2003 and expiring on 07/17/2008.

Jaime D. Gasçon, P.E.
Chief, Product Control Division
NOA No. 08-0206.11
Expiration Date: July 17, 2013
Approval Date: May 08, 2008

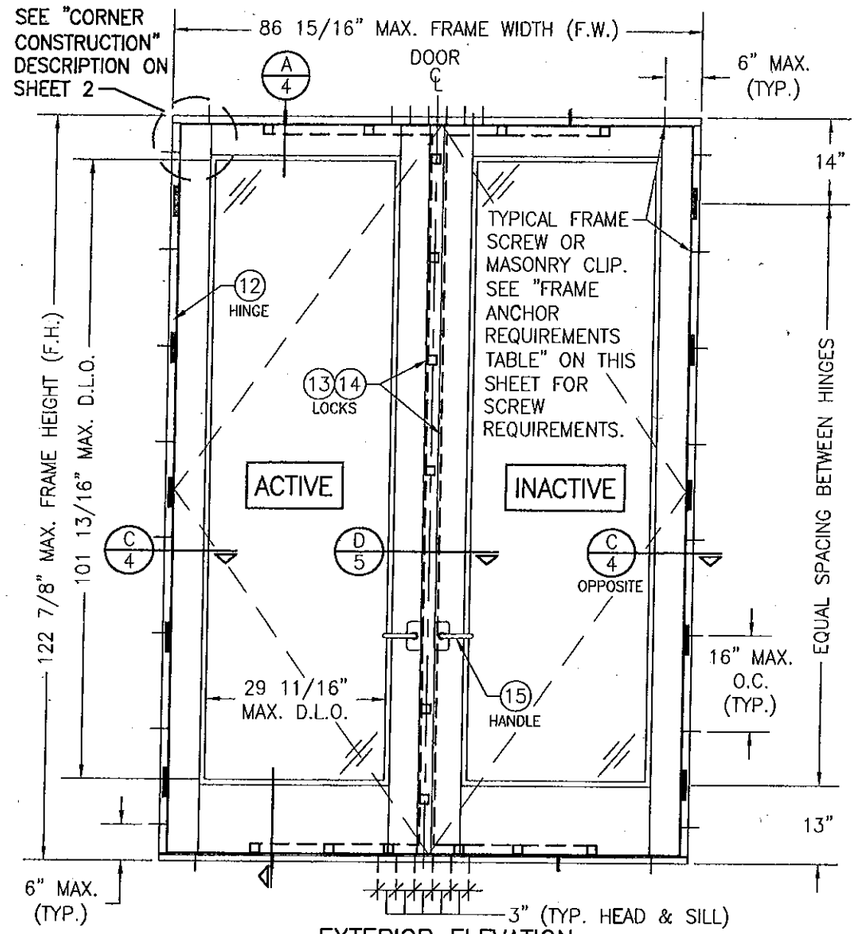

EXTERIOR ELEVATION
DOUBLE OUTSWING DOOR
(RECTANGULAR)
SCALE: 1/2"=1'-0"

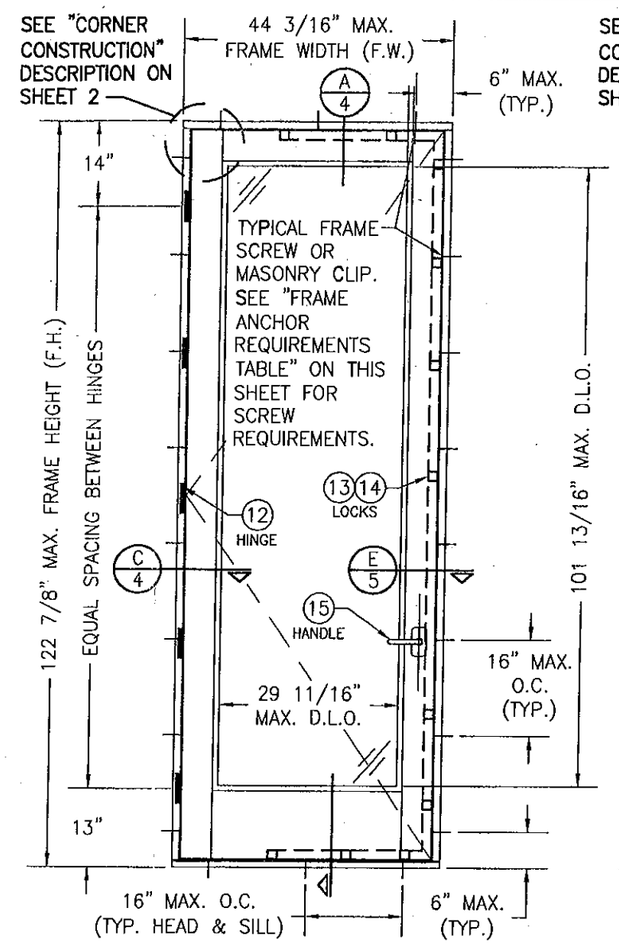

EXTERIOR ELEVATION
SINGLE OUTSWING DOOR
(RECTANGULAR)
SCALE: 1/2"=1'-0"

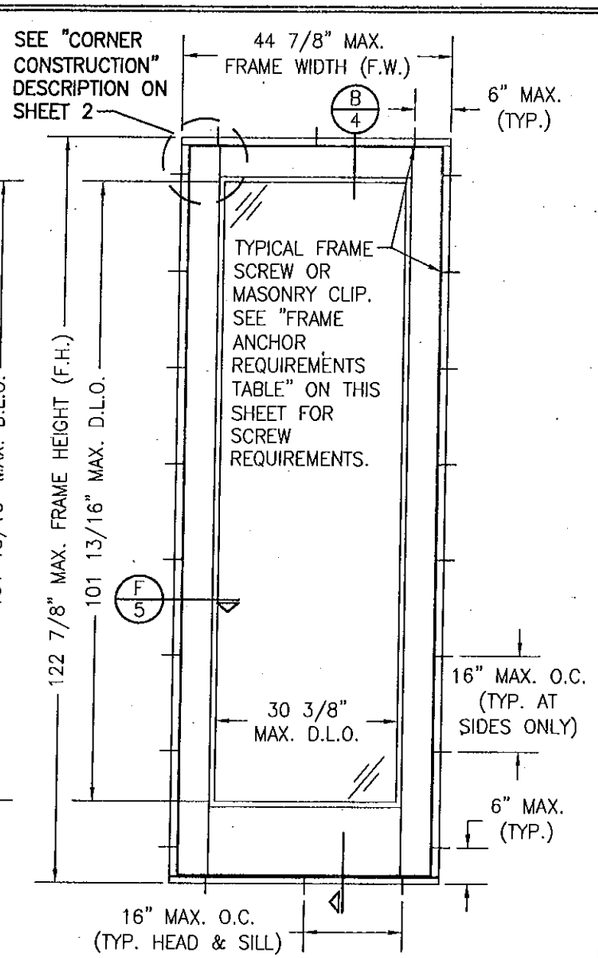

EXTERIOR ELEVATION
SINGLE FIXED PANEL DOOR
(RECTANGULAR)
SCALE: 1/2"=1'-0"

GENERAL NOTES:

1. THESE DOOR SYSTEMS HAVE BEEN TESTED, ANALYZED & APPROVED FOR DESIGN PRESSURES NOT TO EXCEED THOSE SHOWN IN THE "ALLOWABLE DESIGN PRESSURE TABLE(S).
2. OPENINGS, BUCKING & BUCKING FASTENERS MUST BE PROPERLY DESIGNED & INSTALLED TO TRANSFER WIND LOADS TO THE STRUCTURE.
3. ALL HARDWARE & FASTENERS SHALL BE IN ACCORDANCE WITH THESE DRAWINGS & SHALL NOT VARY UNLESS SPECIFICALLY MENTIONED ON THE DRAWINGS. SPECIFIED ANCHOR EMBED TO BASE MATERIAL SHALL BE BEYOND WALL FINISH OR STUCCO.
4. THE DETAILS & SPECIFICATIONS SHOWN HEREIN REPRESENT THE PRODUCTS TESTED & PROPOSED FOR WATER, AIR, IMPACT, CYCLIC & UNIFORM STATIC AIR PRESSURE TESTING IN CONFORMANCE WITH THE FLORIDA BUILDING CODE PROTOCALS TAS-201, 202 & 203 FOR LARGE MISSILE IMPACT DOORS.
5. THESE DOOR SYSTEMS HAVE BEEN DESIGNED IN ACCORDANCE WITH AND MEET THE REQUIREMENTS OF THE FLORIDA BUILDING CODE (FBC) INCLUDING HIGH VELOCITY HURRICANE ZONES (HVHZ).
6. IMPACT SHUTTERS ARE NOT REQUIRED WITH THESE DOORS.
7. ALL ANCHORS SECURING DOOR FRAME TO PRESSURE TREATED BUCKS OR WOOD FRAMING SHALL BE CAPABLE OF RESISTING CORROSION CAUSED BY THE PRESSURE TREATING CHEMICALS IN THE WOOD.
8. DETERMINE THE POSITIVE & NEGATIVE DESIGN LOADS TO USE WHEN REFERENCING THESE DOCUMENTS IN ACCORDANCE WITH THE GOVERNING CODE AND GOVERNING WIND VELOCITY. FOR WIND LOAD CALCULATIONS IN ACCORDANCE WITH THE FLORIDA BUILDING CODE, A DIRECTIONALITY FACTOR OF Kd = 0.85 MAY BE APPLIED WHEN USED IN CONJUNCTION WITH LOAD COMBINATIONS SPECIFIED IN SECTION 2.D OF THE ASCE 7 STANDARD.
9. NO INCREASE IN ALLOWABLE STRESS HAS BEEN USED IN THE CERTIFICATION OF THIS PRODUCT. WIND LOAD DURATION FACTOR Cd = 1.6 WAS USED FOR WOOD SCREW ANALYSIS ONLY.
10. MATERIALS, INCLUDING BUT NOT LIMITED TO STEEL SCREWS, THAT COME INTO CONTACT WITH OTHER DISSIMILAR MATERIALS SHALL MEET THE REQUIREMENTS OF FLORIDA BUILDING CODE CHAPTER 20.

HINGE REQUIREMENTS

DOOR SHAPE	FRAME HEIGHT	MIN. # OF HINGES
RECTANGULAR DOORS	OVER 101"	5
	101" OR LESS	4
ARCH TOP DOORS	OVER 101"	5
	101" OR LESS	4
FULL RADIUS TOP DOORS	OVER 101"	4
	101" OR LESS	3

LOCK REQUIREMENTS TABLE

PANEL LOCATION	MIN. PANEL HEIGHT/WIDTH (IN)	MAX. PANEL HEIGHT/WIDTH (IN)	NO. LOCK POINTS ACTIVE	NO. LOCK POINTS INACTIVE
SIDE	77	104	5	0
	104	120	6	0
TOP	27	34	1	1
	34	48	2	2
BOTTOM	22	37	2	2
	37	48	3	3

ALLOWABLE DESIGN LOAD

POSITIVE	NEGATIVE
65 PSF	70 PSF

PRODUCT RENEWED
as complying with the Florida Building Code
Acceptance No. 08-0206.11
Expiration Date 07/17/2013
By
Miami Dade Product Control Division

* FRAME ANCHOR REQUIREMENTS TABLE

OPENING TYPE (SUBSTRATE)	JAMB TO OPENING FASTENER TYPE	MINIMUM EMBEDMENT	MINIMUM EDGE DIST.
2X_ WOOD FRAME OR BUCK	NO. 12 SMS SCREW	1 1/4"	1"
CMU/CONCRETE	(1) 1/4" CONCRETE SCREWS	1 1/4"	2 1/2"

(1) CONCRETE SCREWS SHALL BE ELCO OR ITW RAMSET/RED HEAD TAPCONS, HILTI KWIK-CON II OR POWERS RAWL TAPPER (HARDENED STEEL OR S.S.).

*ANCHOR NOTE: FRAME MAY BE EITHER DIRECT MOUNTED TO THE OPENING, MOUNTED ONTO A CONTINUOUS WOOD SPACER, OR ANCHORED TO A MIN. 2x4 NO. 3 SOUTHERN PINE WOOD BUCK. WHEN ANCHORED TO A 2x4 BUCK, NO. 12 SCREWS SHALL BE USED. WHEN DIRECT MOUNTED OR MOUNTED WITH SPACER, 1/4" CONCRETE SCREW SHALL BE USED. SEE "ANCHOR REQUIREMENTS TABLE" FOR EMBED REQUIREMENTS.

DRAWN BY: K.P.S.	CHECKED BY: W.W.S.
PLOT: 1=24	DATE: 12/23/02

NO.	REVISION DESCRIPTION	BY	DATE
A1	UPDATE TO CODE COMPLIANCE	W.W.S.	04/11/08

DRAWING TITLE: LÜXBAU WINDOWS & DOORS WOODEN EUROPEAN DOOR SYSTEM

MANUFACTURER: LÜXBAU, LLC
2400 CENTERPARK WEST DRIVE, SUITE 150
WEST PALM BEACH, FL 33409
561-684-1500

CONSULTANTS: W. W. SCHAEFER ENGINEERING & CONSULTING, P.A.
8895 N. MILITARY TRAIL, SUITE C-204
PALM BEACH GARDENS, FL 33410
PHONE: 561-775-4902 FAX: 561-775-4903

CERTIFICATION
APR 11 2008
WARREN W. SCHAEFER, P.E.
P.E. NO. 44135

DRAWING NO. 1191 REV. A

SHEET NO. 1 OF 6

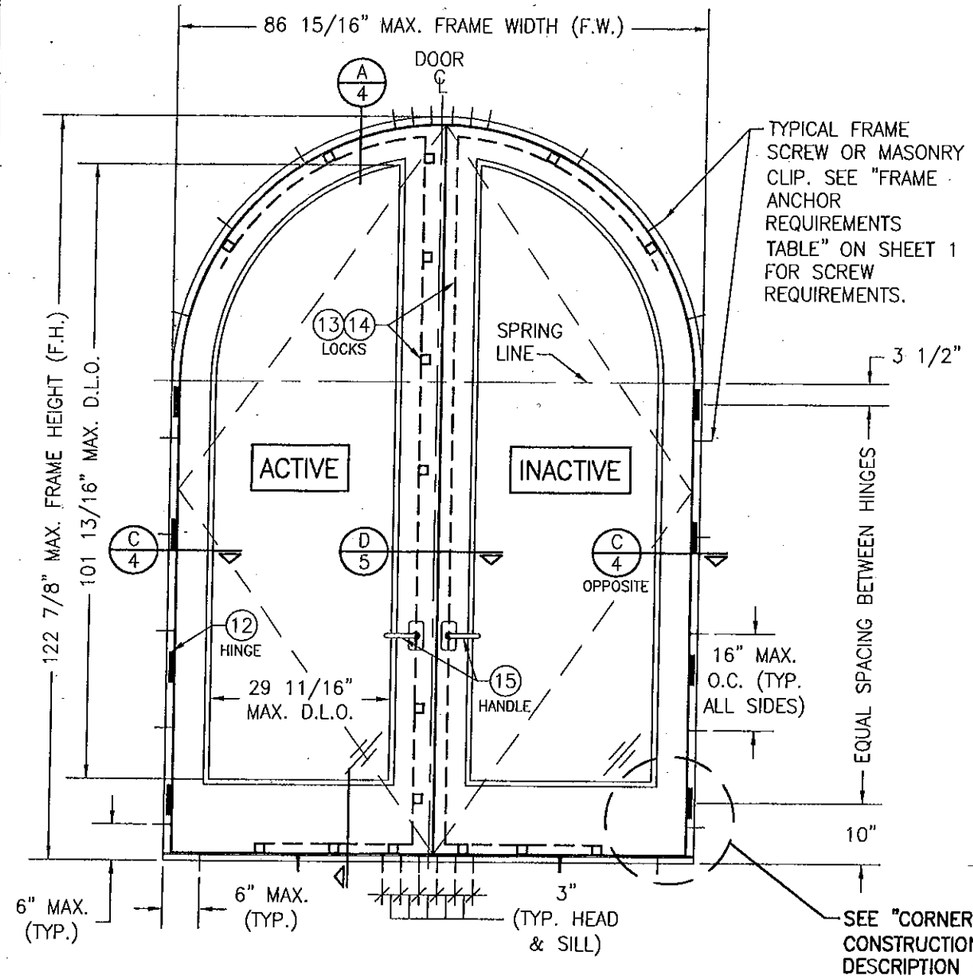

EXTERIOR ELEVATION
DOUBLE OUTSWING DOOR
(CIRCLE TOP)
SCALE: 1/2"=1'-0"

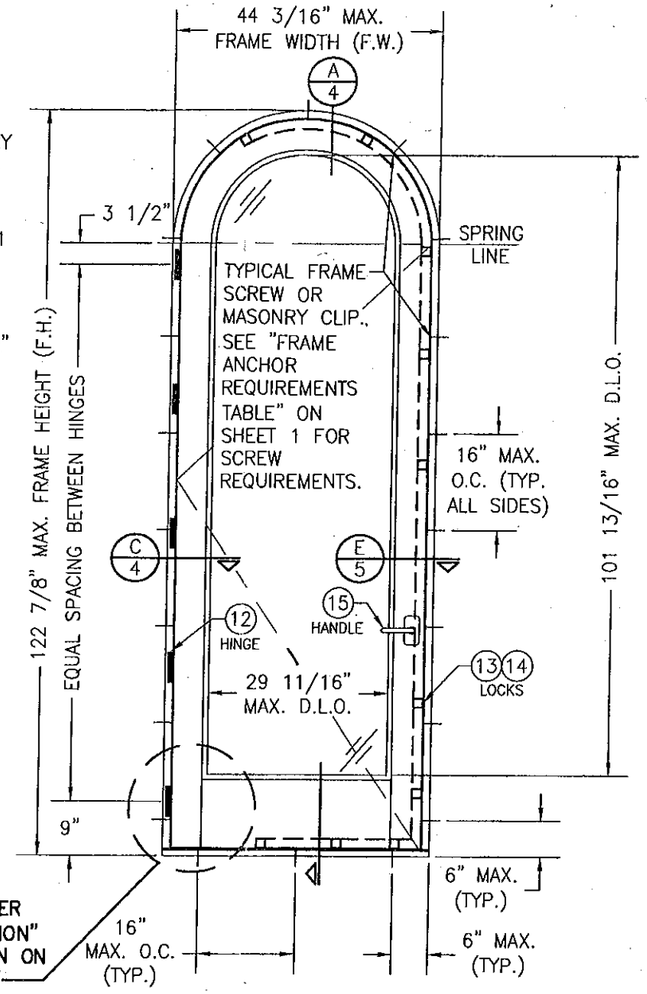

EXTERIOR ELEVATION
SINGLE OUTSWING DOOR
(CIRCLE TOP)
SCALE: 1/2"=1'-0"

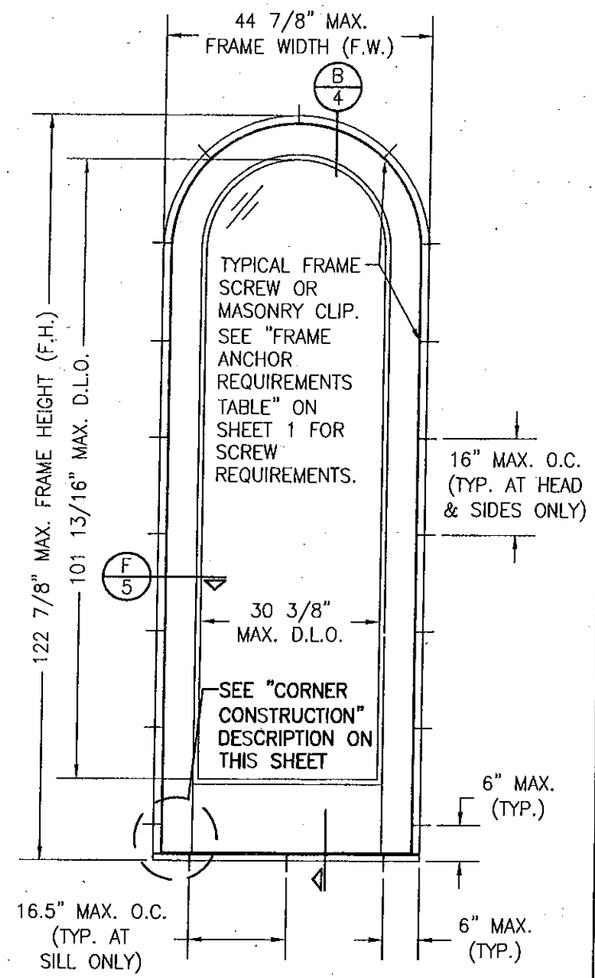

EXTERIOR ELEVATION
SINGLE FIXED PANEL DOOR
(CIRCLE TOP)
SCALE: 1/2"=1'-0"

CORNER CONSTRUCTION

JAMB & SILL CORNERS: VERTICAL JAMB ENDS ARE COPED AND BUTTED TO HORIZONTAL JAMBS WITH JOINT FULLY GLUED WITH WOOD GLUE AND DOWELED WITH (3) 1/2" DIA. x 3 5/16" LONG MERBAU WOOD DOWELS.

TOP RAIL TO STILE CORNERS: HORIZONTAL SASH ENDS ARE COPED AND BUTTED TO VERTICAL SASH PROFILES WITH JOINT FULLY GLUED WITH WOOD GLUE AND DOWELED WITH (4) 1/2" DIA. x 3 7/16" AND (3) 5/8" DIA. x 3 1/4" MERBAU WOOD DOWELS.

BOTTOM RAIL TO STILE CORNERS: HORIZONTAL SASH ENDS ARE COPED AND BUTTED TO VERTICAL SASH PROFILES WITH JOINT FULLY GLUED WITH WOOD GLUE AND DOWELED WITH (7) 1/2" DIA. x 3 7/16" AND (5) 5/8" DIA. x 3 1/4" MERBAU WOOD DOWELS.

FIXED PANEL SASH CORNERS: HORIZONTAL SASH ENDS ARE COPED AND BUTTED TO VERTICAL SASH PROFILES WITH JOINT FULLY GLUED WITH WOOD GLUE AND DOWELED WITH (2) 1/2" DIA. x 3 7/16" AND (1) 5/8" DIA. x 3 1/4" MERBAU WOOD DOWELS.

PRODUCT RENEWED
as complying with the Florida Building Code
Acceptance No 08-0206.11
Expiration Date 07/17/2013
By
Miami Dade Product Control Division

DRAWN BY: K.P.S.	CHECKED BY: W.W.S.
PLOT: 1=24	DATE: 12/23/02

NO.	REVISION DESCRIPTION	BY	DATE

DRAWING TITLE: LÜXBAU WINDOWS & DOORS WOODEN EUROPEAN DOOR SYSTEM

MANUFACTURER: LÜXBAU, LLC
2400 CENTERPARK WEST DRIVE, SUITE 150
WEST PALM BEACH, FL 33409
561-684-1500

CONSULTANTS: W. W. SCHAEFER ENGINEERING & CONSULTING, P.A.
8895 N. MILITARY TRAIL; SUITE C-204
PALM BEACH GARDENS, FL 33410
PHONE: 561-775-4902 FAX: 561-775-4903

CERTIFICATION
APR 11 2008
WARREN W. SCHAEFER, P.E.
P.E. NO. 44135

DRAWING NO. 1191 REV. A

SHEET NO. 2 OF 6

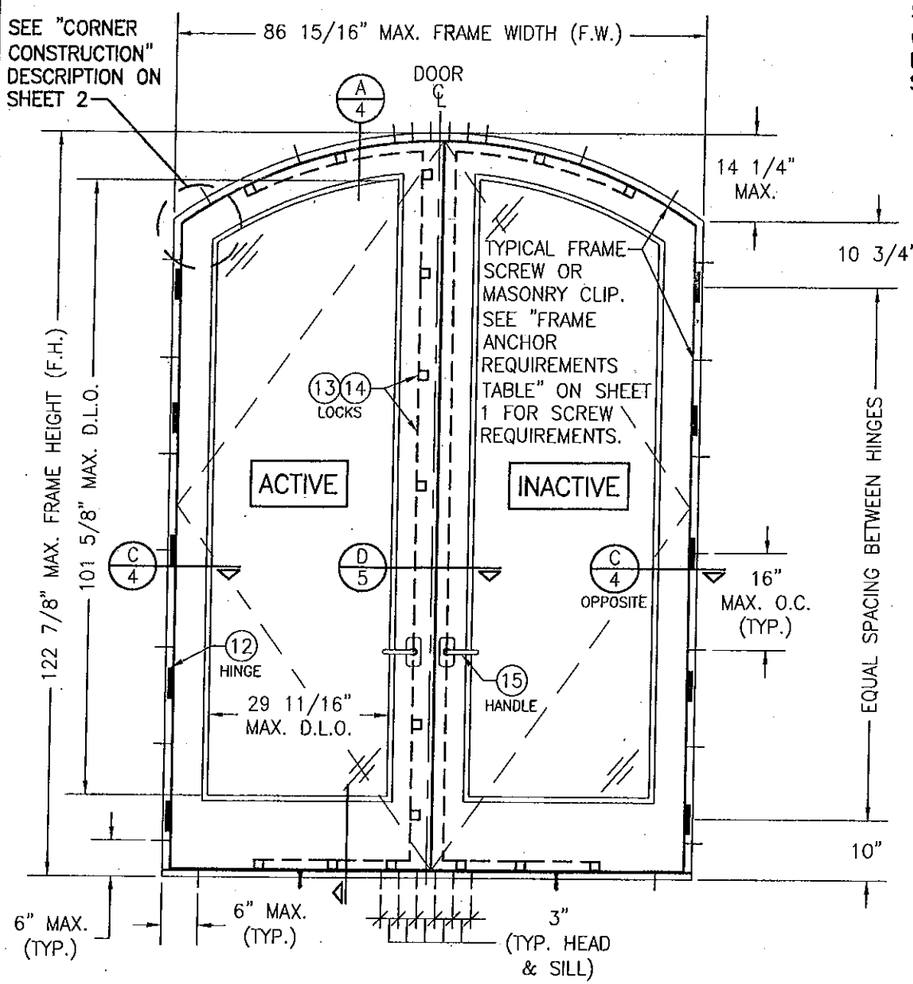

EXTERIOR ELEVATION
DOUBLE OUTSWING DOOR
(ARCH TOP)
SCALE: 1/2"=1'-0"

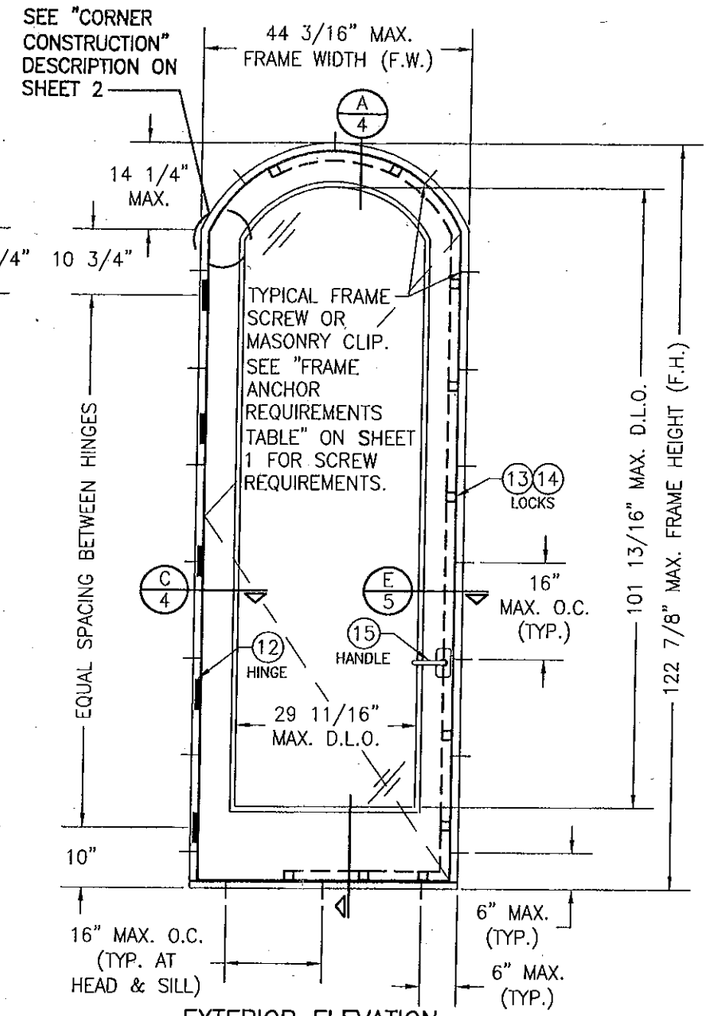

EXTERIOR ELEVATION
SINGLE OUTSWING DOOR
(ARCH TOP)
SCALE: 1/2"=1'-0"

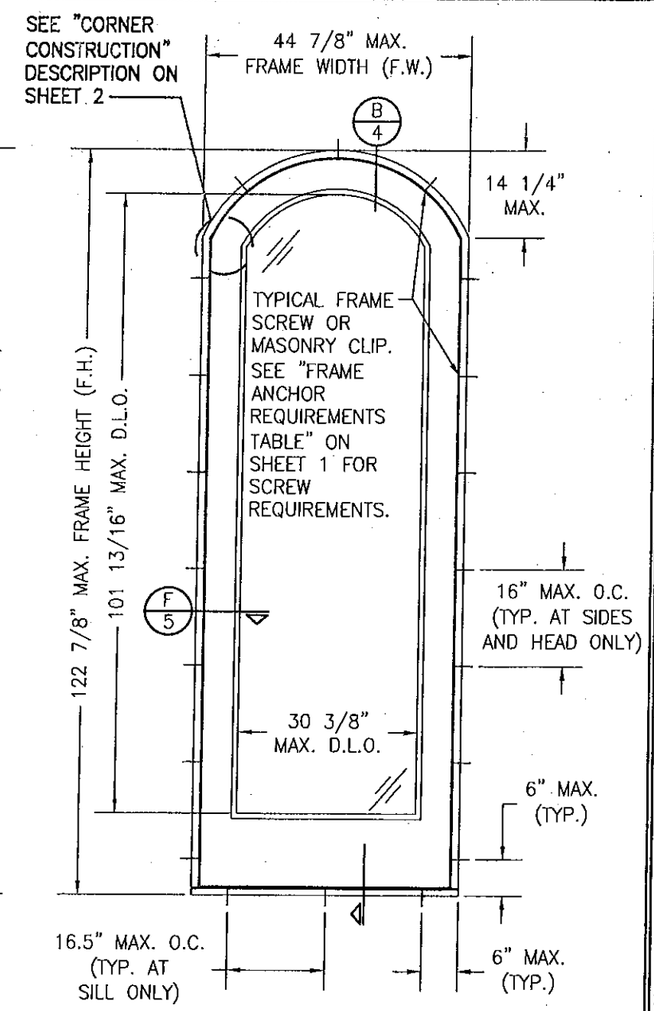

EXTERIOR ELEVATION
SINGLE FIXED PANEL DOOR
(ARCH TOP)
SCALE: 1/2"=1'-0"

PRODUCT RENEWED
as complying with the Florida Building Code
Acceptance No 08-0206.11
Expiration Date 07/17/2013
By
Miami Dade Product Control Division

NO.	REVISION DESCRIPTION	BY	DATE

DRAWN BY: K.P.S. | CHECKED BY: W.W.S.
PLOT: 1=24 | DATE: 12/23/02

DRAWING TITLE: LÜXBAU WINDOWS & DOORS WOODEN EUROPEAN DOOR SYSTEM

MANUFACTURER: LÜXBAU, LLC
2400 CENTERPARK WEST DRIVE, SUITE 150
WEST PALM BEACH, FL 33409
561-684-1500

CONSULTANTS: W. W. SCHAEFER ENGINEERING & CONSULTING, P.A.
8895 N. MILITARY TRAIL; SUITE C-204
PALM BEACH GARDENS, FL 33410
PHONE: 561-775-4902 FAX: 561-775-4903

CERTIFICATION
APR 11 2008
WARREN W. SCHAEFER, P.E.
P.E. NO. 44135

DRAWING NO. 1191 | REV. A

SHEET NO. 3 OF 6

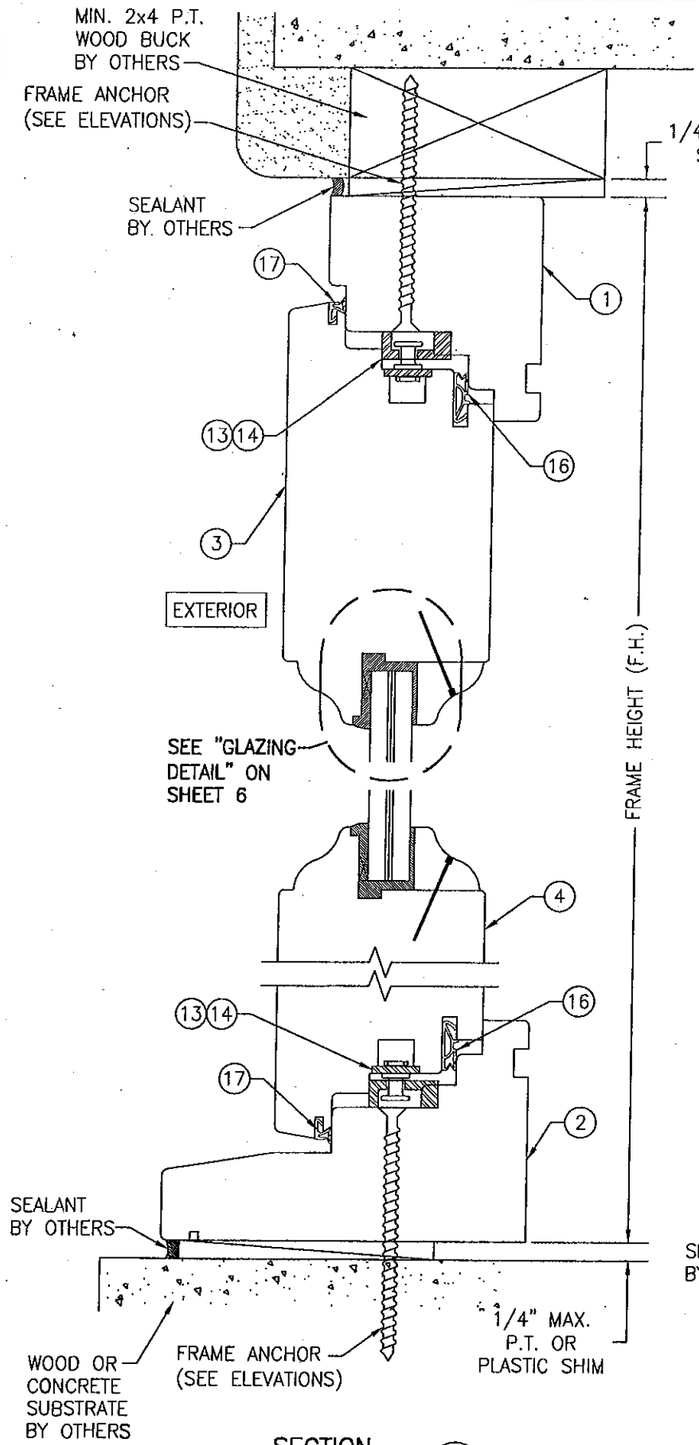

SECTION A/4
SCALE: 1/2 FULL

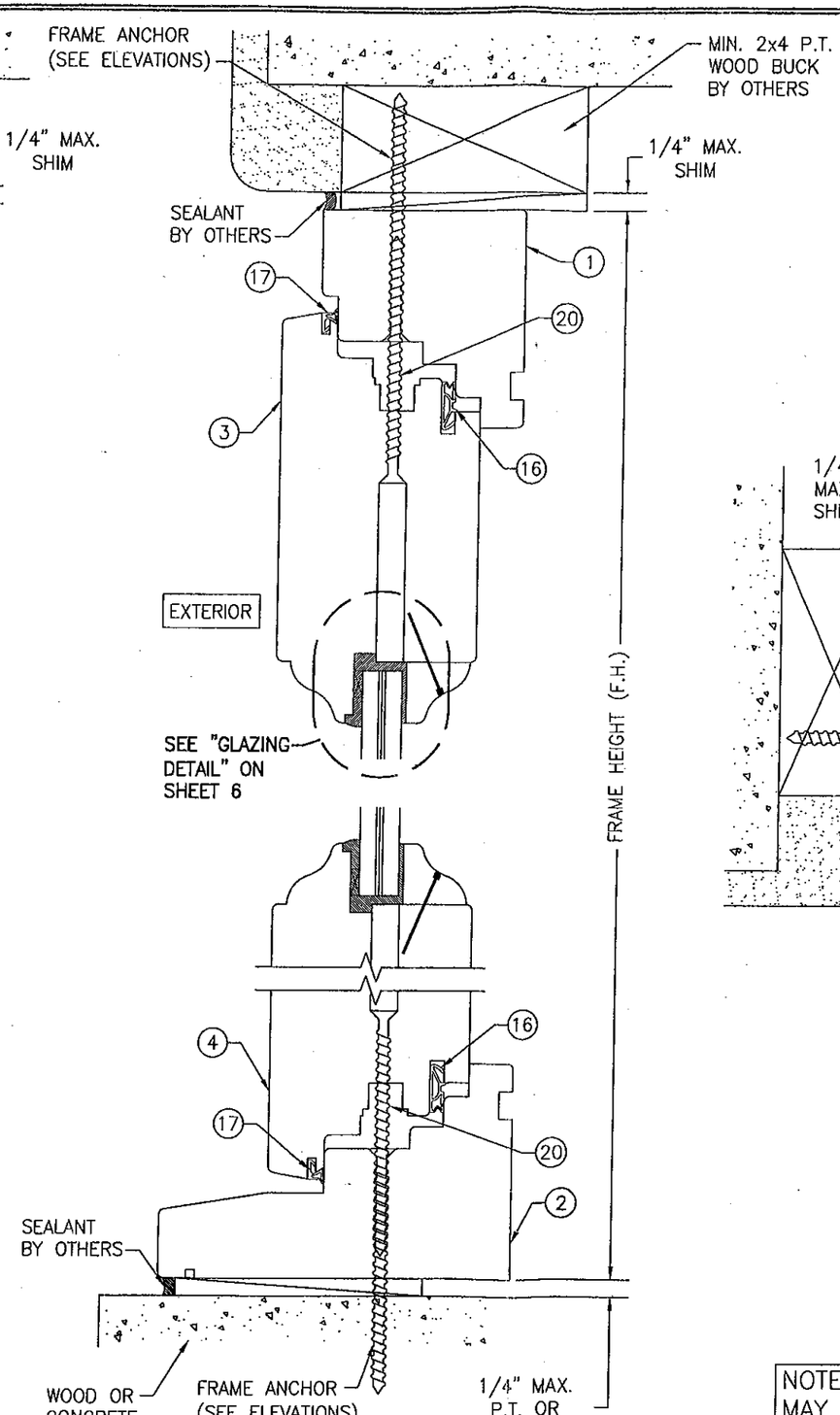

SECTION B/4
SCALE: 1/2 FULL

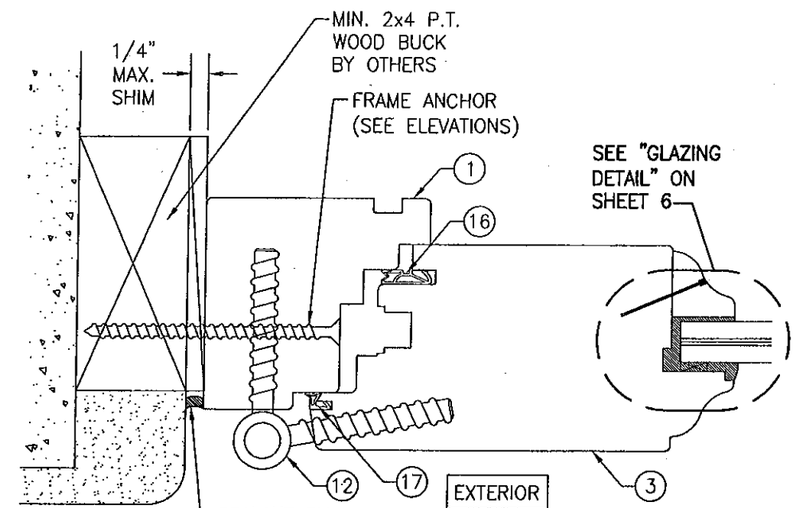

SECTION C/4
SCALE: 1/2 FULL

NOTE: BRICK MOLDS MAY BE PLACED WITH DOOR & ARE OPTIONAL (NOT SHOWN)

PRODUCT RE[illegible] as complying with the Fl[illegible] Building Code
Acceptance No 08-0206.11
Expiration Date 07/17/2013
By [illegible]
Miami-Dade Product Control Division

DRAWN BY: K.P.S.	CHECKED BY: W.W.S.
PLOT: 1=2	DATE: 12/23/02

NO.	REVISION DESCRIPTION	BY	DATE

DRAWING TITLE: LOXBAUM WINDOWS & DOORS WOODEN EUROPEAN DOOR SYSTEM

MANUFACTURER: LÜXBAU, LLC
2400 CENTERPARK WEST DRIVE, SUITE 150
WEST PALM BEACH, FL 33409
561-684-1500

CONSULTANTS: W. W. SCHAEFER ENGINEERING & CONSULTING, P.A.
8895 N. MILITARY TRAIL SUITE C-204
PALM BEACH GARDENS, FL 33410
PHONE: 561-775-4902 FAX: 561-775-4903

CERTIFICATION
APR 11 2008
WARREN W. SCHAEFER, P.E.
P.E. NO. 44135

DRAWING NO. 1191
REV. A
SHEET NO. 4 OF 6

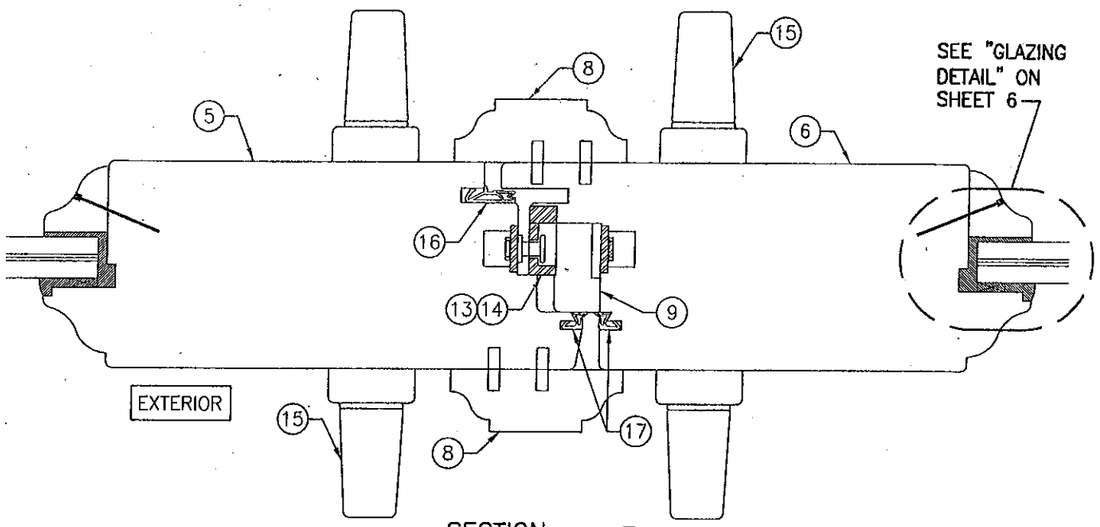

SECTION D/5
SCALE: 1/2 FULL

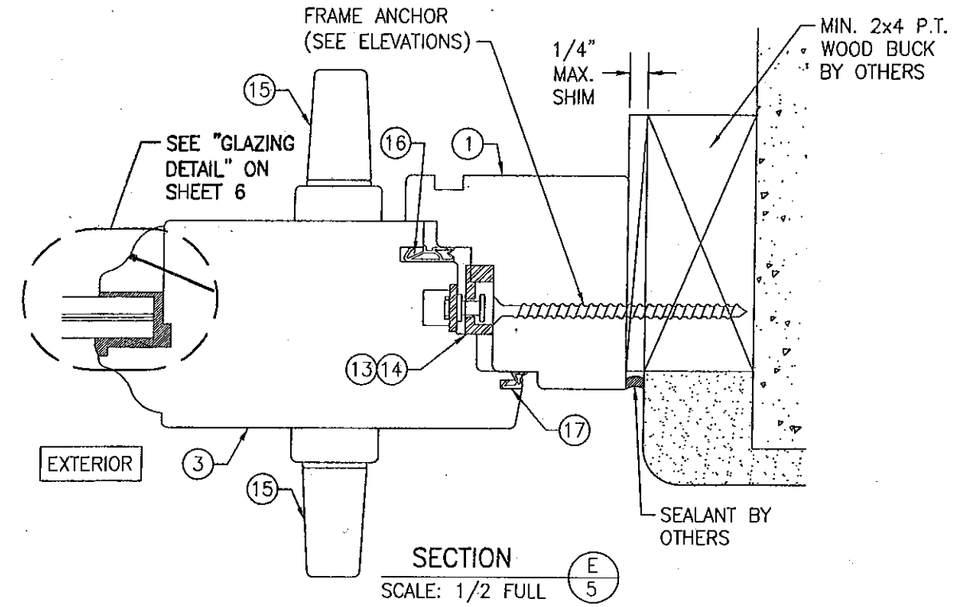

SECTION E/5
SCALE: 1/2 FULL

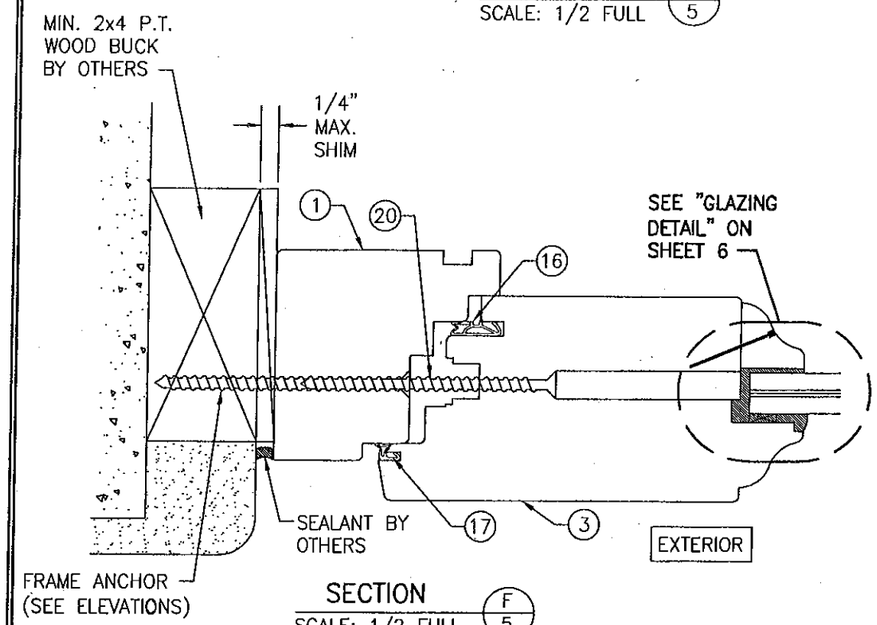

SECTION F/5
SCALE: 1/2 FULL

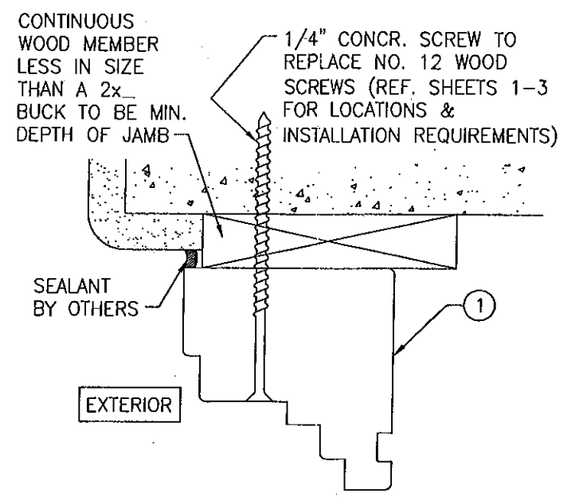

OPTIONAL DIRECT MOUNT DETAIL
FOR DETAIL NOT SHOWN, SEE OTHER SECTIONS
(HEAD SECTION SHOWN, SIDES AND SILL SIMILAR)

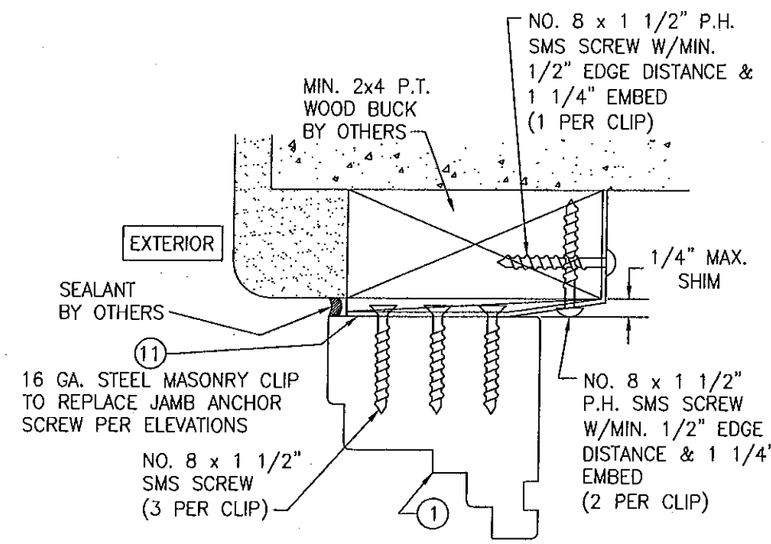

OPTIONAL MASONRY CLIP MOUNT DETAIL
FOR DETAIL NOT SHOWN, SEE OTHER SECTIONS
(HEAD SECTION SHOWN, SIDES AND SILL SIMILAR)

NOTE: BRICK MOLDS MAY BE PLACED WITH DOOR & ARE OPTIONAL (NOT SHOWN)

PRODUCT RENEWED
as complying with the Florida Building Code
Acceptance No 08-0206.11
Expiration Date 07/17/2013
By _____
Miami-Dade Product Control Division

DRAWN BY: K.P.S.	CHECKED BY: W.W.S.
PLOT: 1=2	DATE: 12/23/02

NO.	REVISION DESCRIPTION	BY	DATE

DRAWING TITLE
LÜXBAU WINDOWS & DOORS
WOODEN EUROPEAN DOOR SYSTEM

MANUFACTURER
LÜXBAU, LLC
2400 CENTERPARK WEST DRIVE, SUITE 150
WEST PALM BEACH, FL 33409
561-684-1500

CONSULTANTS
W. W. SCHAEFER ENGINEERING & CONSULTING, P.A.
8895 N. MILITARY TRAIL, SUITE C-204
PALM BEACH GARDENS, FL 33410
PHONE: 561-775-4902 FAX: 561-775-4903

CERTIFICATION
APR 1 1 2008
WARREN W. SCHAEFER, P.E.
P.E. NO. 44135

DRAWING NO.	REV.
1191	A

SHEET NO. 5 OF 6

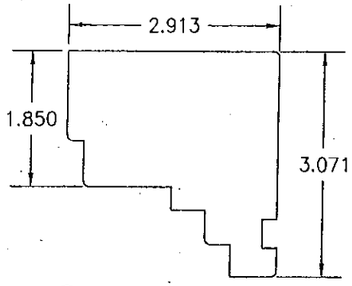

① HEAD & SIDE JAMB

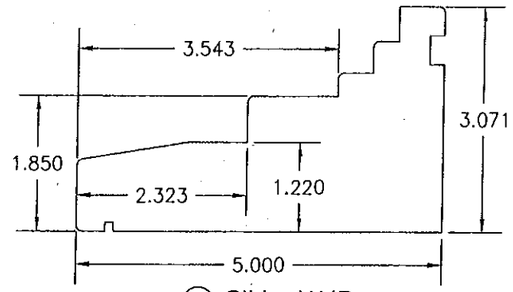

② SILL JAMB

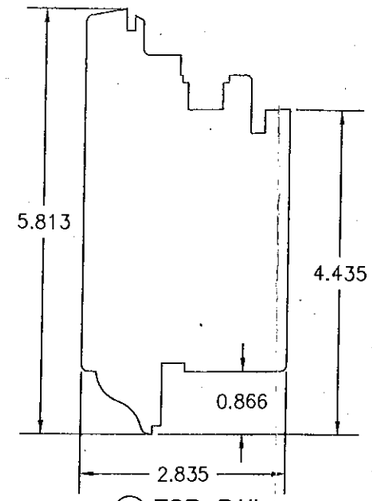

③ TOP RAIL, HINGE STILE & SINGLE DOOR LOCK STILE

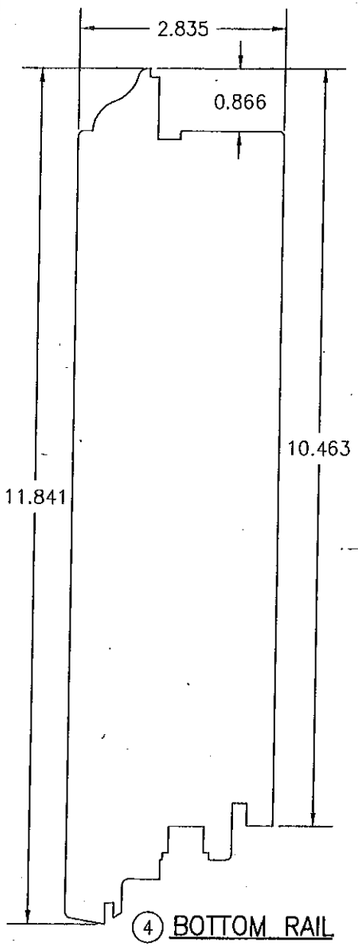

④ BOTTOM RAIL

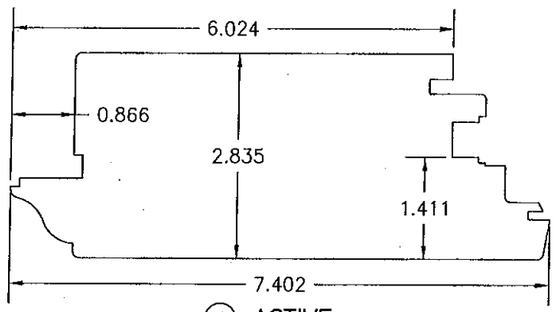

⑤ ACTIVE MEETING STILE

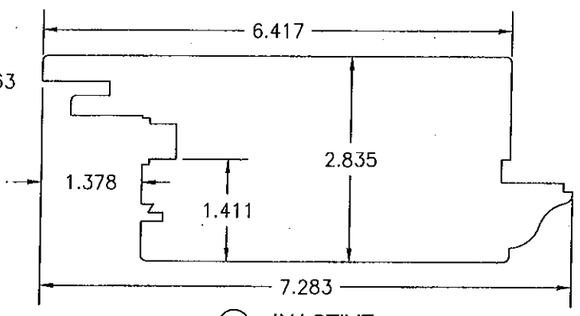

⑥ INACTIVE MEETING STILE

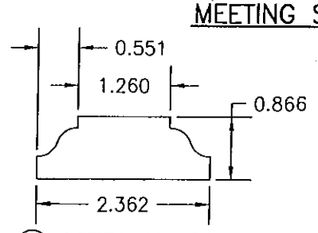

⑧ ASTRIGAL CAP

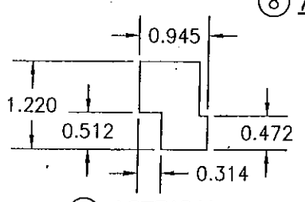

⑨ ASTRIGAL

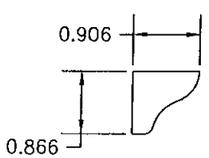

⑩ GLAZING BEAD

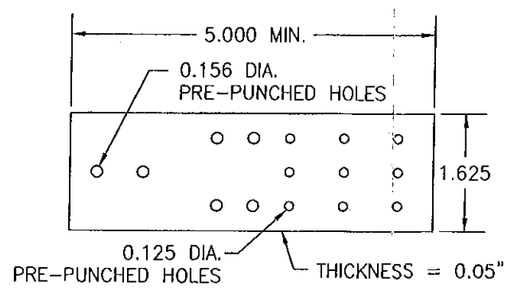

⑪ MASONRY CLIP

PRE-PUNCHED HOLES ARE ADDED FOR CLIPS LONGER THAN 5"

ITEM #	PART	ITEM DESCRIPTION	MANUFACTURER/NOTES
		PARTS	
1	7478	FRAME HEAD & SIDE JAMB	SELECT STRUCTURAL MERBAU OR MAHOGANY
2	78127	SILL JAMB	SELECT STRUCTURAL MERBAU OR MAHOGANY
3	72148	TOP RAIL, HINGE STILE & SINGLE DOOR LOCK STILE	SELECT STRUCTURAL MERBAU OR MAHOGANY
4	72301	BOTTOM RAIL	SELECT STRUCTURAL MERBAU OR MAHOGANY
5	72188	ACTIVE MEETING STILE	SELECT STRUCTURAL MERBAU OR MAHOGANY
6	72185	INACTIVE MEETING STILE	SELECT STRUCTURAL MERBAU OR MAHOGANY
8	2431	ASTRIGAL	SELECT STRUCTURAL MERBAU OR MAHOGANY
9	2260	ASTRIGAL CAP	SELECT STRUCTURAL MERBAU OR MAHOGANY
10	2223	GLAZING BEAD	SELECT STRUCTURAL MERBAU OR MAHOGANY
11	–	1 5/8" WIDE x 0.05" THK. x MIN. 5" LONG MASONARY CLIP	ASTM A653 MIN. 33 KSI GALV. STEEL
		HARDWARE	
12	5020-SM	HINGE	G-U HARDWARE (BRASS, PLATED STEEL OR S.S.)
13	6-25474-35-0-3	MULTI-POINT LOCK SET	G-U HARDWARE HWC-35
14	3/45M5	MULTI-POINT LOCK SET	SIEGENIA NO. 3/45M5
15	–	HANDLE	AS REQUIRED TO OPERATE LOCKS
		SEALS AND SEALANTS	
16	SV-12/ ACF-6950	COMPRESSION SEAL	DEVENTER/G-U
17	SV-33/ ACF-4527	COMPRESSION SEAL	DEVENTER/G-U
		MISCELLANEOUS FASTENERS	
19	–	1/4" x 1 1/4" BRAD NAIL	2" FROM CORNERS & 4" O.C.
20	–	#12 x 4" PFH SMS SCREW	4" FROM CORNERS & 12" O.C.

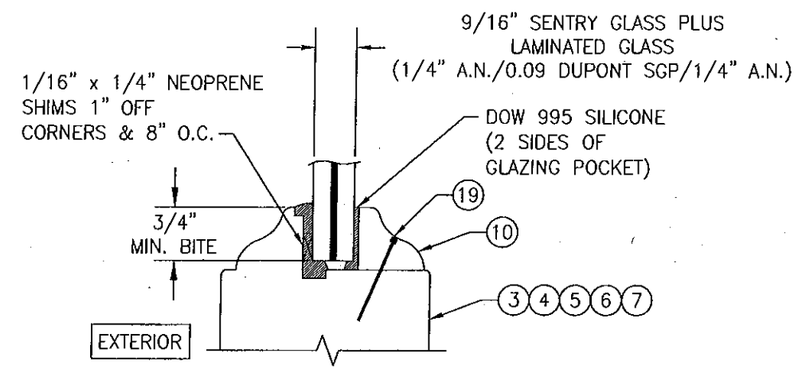

GLAZING DETAIL

PRODUCT RENEWED
as complying with the Florida Building Code
Acceptance No 08-0206.11
Expiration Date 07/17/2013
By
Miami Dade Product Control Division

DRAWN BY: K.P.S.	CHECKED BY: W.W.S.
PLOT: 1=2	DATE: 12/23/02

NO.	REVISION DESCRIPTION	BY	DATE

DRAWING TITLE: LÖXBAUM WINDOWS & DOORS WOODEN EUROPEAN DOOR SYSTEM

MANUFACTURER: LÖXBAU, LLC
2400 CENTERPARK WEST DRIVE, SUITE 150
WEST PALM BEACH, FL 33409
561-684-1500

CONSULTANTS: W. W. SCHAEFER ENGINEERING & CONSULTING, P.A.
8895 N. MILITARY TRAIL, SUITE C-204
PALM BEACH GARDENS, FL 33410
PHONE: 561-775-4902 FAX: 561-775-4903

CERTIFICATION: APR 11 2008
WARREN W. SCHAEFER, P.E.
P.E. NO. 44135

DRAWING NO. 1191 REV. A

SHEET NO. 6 OF 6