MIAMI-DADE COUNTY

BUILDING CODE COMPLIANCE OFFICE (BCCO)
PRODUCT CONTROL DIVISION

MIAMI-DADE COUNTY, FLORIDA
METRO-DADE FLAGLER BUILDING
140 WEST FLAGLER STREET, SUITE 1603
MIAMI, FLORIDA 33130-1563
(305) 375-2901 FAX (305) 375-2908
www.buildingcodeonline.com

NOTICE OF ACCEPTANCE (NOA)

Clopay Building Products Company
8585 Duke Blvd.
Mason, OH 45040

SCOPE: This NOA is being issued under the applicable rules and regulations governing the use of construction materials. The documentation submitted has been reviewed by the BCCO and accepted by the Building Code and Product Review Committee (BCPRC) to be used in Miami Dade County and other areas where allowed by the Authority Having Jurisdiction (AHJ).

This NOA shall not be valid after the expiration date stated below. The BCCO (In Miami Dade County) and/or the AHJ (in areas other than Miami Dade County) reserve the right to have this product or material tested for quality assurance purposes. If this product or material fails to perform in the accepted manner, the manufacturer will incur the expense of such testing and the AHJ may immediately revoke, modify, or suspend the use of such product or material within their jurisdiction. BCPRC reserves the right to revoke this acceptance, if it is determined by BCCO that this product or material fails to meet the requirements of the applicable building code.

This product is approved as described herein, and has been designed to comply with the Florida Building Code including the High Velocity Hurricane Zone.

DESCRIPTION: Commercial Ribbed Steel Pan Sectional Garage Door up to12' 2" Wide.

APPROVAL DOCUMENT: Drawing No.102645, Sheets 1 of 1, titled "M/N 524/520 C4ST/COST/224," dated 11/13/02, with last revision on 09/2005, prepared by Clopay Building Products Company, signed and sealed by M.W. Westerfield, PE. on 03/20/08, bearing the Miami-Dade County Product Control revision and renewal stamps with the NOA number and expiration date by the Miami-Dade County Product Control Division.

MISSILE IMPACT RATING: Large & Small Missile.

LABELING: Each unit shall bear a permanent label with the manufacturer's name or logo, city, state and following statement: "Miami-Dade County Product Control Approved or MDPCA", unless otherwise noted herein.

RENEWAL of this NOA shall be considered after a renewal application has been filed and there has been no change in the applicable building code negatively affecting the performance of this product.

TERMINATION of this NOA will occur after the expiration date or if there has been a revision or change in the materials, use, and/or manufacture of the product or process. Misuse of this NOA as an endorsement of any product, for sales, advertising or any other purposes shall automatically terminate this NOA. Failure to comply with any section of this NOA shall be cause for termination and removal of NOA.

LIMITATION: This approval requires the manufacturer to do testing of all coils used to fabricate door panel under this Notice of Acceptance. A minimum of 2 specimens shall be cut from each coil and tensile tested according to ASTM E-8 by a Miami-Dade County approved laboratory selected and paid by the manufacturer. Every 3 months, four times a year, the manufacturer shall mail to this office: a copy of the tested reports with confirmation that the specimens were selected from coils at the manufacturer production facilities, and a notarized statement from the manufacturer that only coils with yield strength of 52,200 psi or more shall be used to make panels for Miami Dade County under this Notice of Acceptance.

ADVERTISEMENT: The NOA number preceded by the words Miami-Dade County, Florida, and followed by the expiration date may be displayed in advertising literature. If any portion of the NOA is displayed, then it shall be done in its entirety.

INSPECTION: A copy of this entire NOA shall be provided to the user by the manufacturer or its distributors and shall be available for inspection at the job site at the request of the Building Official.

This NOA revises and renews NOA # 05-0303.01consists of this page, evidence page E-1, as well as approval document mentioned above.

The submitted documentation was reviewed by **Mohammed Iqbal Shaikh, PE.**

MIAMI-DADE COUNTY APPROVED 04/08/08

NOA No: 08-0212.04
Expiration Date: May 8, 2013
Approval Date: May 01, 2008

Clopay Building Products Co.

NOTICE OF ACCEPTANCE: EVIDENCE PAGE

A DRAWINGS

1. Drawing prepared by Clopay Building Products Company titled "M/N 424/520/C4ST/COST/224", Drawing No. 102645, dated 11/13/02 with latest revision on 09/2005, Sheets 1 of 1 signed and sealed by M. W. Westerfield, P.E on 03/20/08.

B TEST

1. Test Report on Uniform Static Air Pressure Test per TAS 202, Large Missile Impact Test per TAS 201 and Cyclic Wind Pressure Test per TAS 203, of "Specimen A, B, C, 14'-2" x 8' 24 gauge galvanized steel garage door drawing 103288" by American Test Lab, Inc Report No. 1018.01-04 dated 12/10/04, signed and sealed by D. W. Johnson, PE.

2. Addendum to test report No. 1018.01-04 dated 07/11/05 and signed by D. W. Johnson PE.

C CALCULATIONS

1. None.

D QUALITY ASSURANCE

1. Building Code Compliance Office .

E STATEMENTS

1. Letter of Code compliance prepared by Mark Westerfield, dated 04/03/08, signed and sealed by M. W. Westerfield PE

2. Letter of No financial interest prepared by Mark Westerfield employed by Clopay Building Products, signed and sealed by M. Westerfield and notarized by S. E. Rodenhauser.

Mohammed Iqbal Shaikh, P.E.
Sr. Building Code Compliance Specialist
NOA No 08-0212.04
Expiration Date: May 8, 2013
Approval Date: May 01, 2008

CLOPAY MODELS 524, 520
IDEAL MODELS C4ST, CØST
HOLMES MODEL 224

MODELS 52Ø, CØST: 2Ø GA STEEL SKIN
MODELS 524, C4ST, 224: 24 GA STEEL SKIN

REV	DATE	DESCRIPTION
1	4/2003	MISC. EDITORIAL REVISIONS
2	2/2005	REMOVED RIVET FROM INTER. STILE; SKIN MIN YIELD WAS 42.8 KSI; WAS 2-PC DES
3	7/2005	UPDATED PER M-D COMMENTS
4	9/2005	CORRECTED 'JAMB CONFIGURATION' TO PROPERLY SHOW 1-PC DES

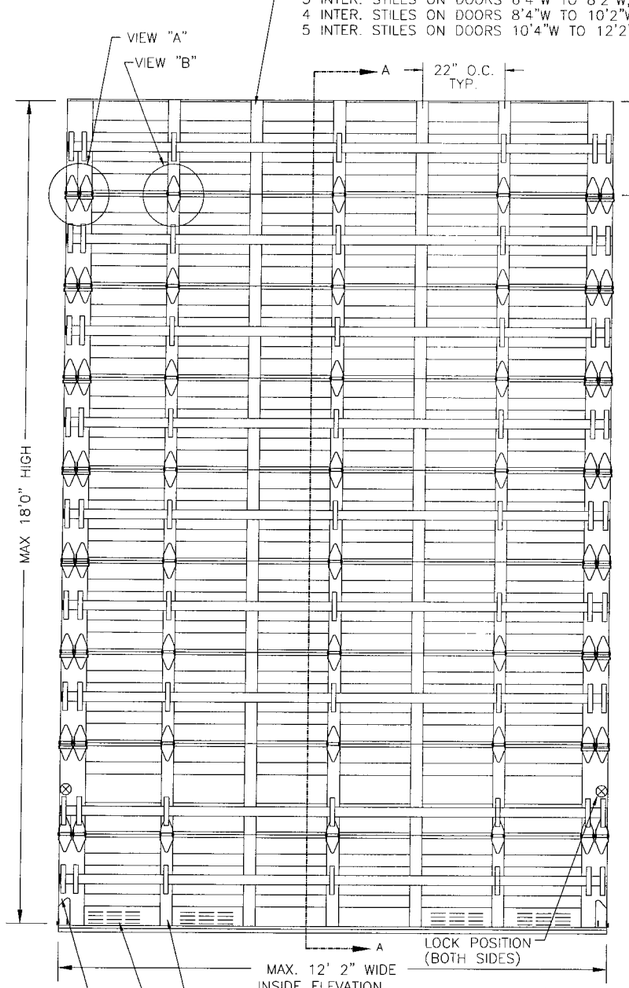

2 INTERMEDIATE STILES ATTACHED TO DOOR SKIN WITH PATENTED TOG-L-LOC SYSTEM AT TOP AND BOTTOM AND AT EACH MAJOR RIB

LOCATION OF OPTIONAL VENTS (MAX. OPEN AREA: 60 IN²)

3 1-PC DOUBLE END STILES (6" X 1-7/8" X 0.058") ATTACHED TO DOOR SKIN WITH PATENTED TOG-L-LOC SYSTEM AS FOLLOWS: (2) AT TOP, (2) AT BOTTOM, & (4) ACROSS THE FACE OF THE SECTION

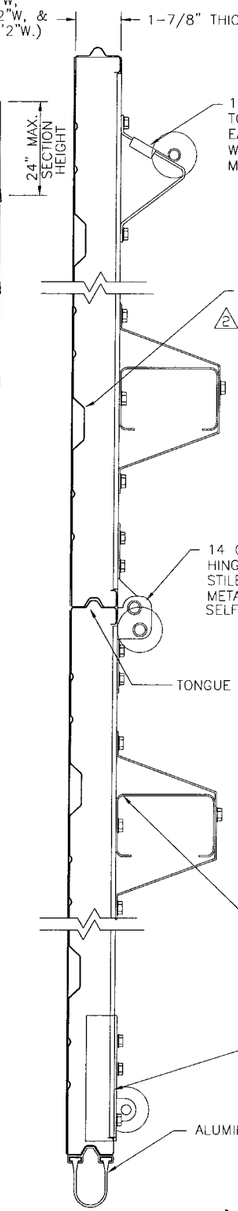

12 GA. GALV. STEEL TOP ROLLER BRACKET. EACH BRACKET ATTACHED W/4 #14X5/8" SHEET METAL SCREWS.

3 24 GA. (0.0239" MIN.) G-40 MIN. GALV. STEEL SKIN (MIN. YIELD: 52.2 KSI) WITH 2 BAKED-ON PRIMER AND POLYESTER TOP COAT APPLIED TO BOTH SIDES OF STEEL SKIN. EACH SECTION HAS TWO 1/2" DEEP RIBS ROLL-FORMED INTO PANEL.

14 GA. GALV. STEEL ROLLER (END) HINGE. EACH FASTENED TO END STILES W/(4) #14x5/8" SHEET METAL SCREWS AND W/(4) 1/4"x3/4" SELF TAPPING SCREWS.

TONGUE & GROOVE JOINTS 3

(1) 4" TALL x 2-1/2" WIDE x 14 GA. GALV. C-CHANNEL PER DOOR SECTION, FASTENED TO DOOR AT STILE LOCATIONS: BY ONE 1/4"x3/4" SELF TAPPING SCREW AND BY (7) 1-1/4" WIDE MIN. x 16 GA. GALV. STEEL STRAPS WITH 1/4" x 3/4" SELF TAPPING SCREWS. STRAPS ARE ATTACHED TO STILE WITH (2) SELF TAPPING SCREWS AND TO SECTION WITH (1) SELF TAPPING SCREW TO C-CHANNEL.

12 GA. MIN. GALV. STEEL BOTTOM BRACKET. ATTACHED W/(4) #14x5/8" SHEET METAL SCREWS. & 12 GA. MIN. GALV. STEEL INNER BOTTOM BRACKETS ATTACHED W/(2) #14x5/8 SMS.

ALUMINUM EXTRUSION & VINYL WEATHERSTRIP.

CONTINUOUS ANGLE ATTACHED CAN BE ATTACHED DIRECTLY TO 2x6 SYP (#2 OR BETTER) WOOD JAMBS WITH 5/16x1-5/8" LAG SCREWS. LAG SCREWS POSITIONED AT SAME LOCATIONS AS TRACK CLIPS (I.E. LOCATED AT 3-1/2", 10", THEN 12" TO 14" ON-CENTER THEREAFTER). WOOD JAMBS MOUNTED TO SUPPORTING STRUCTURE WITH WEJ-IT SLEEVE ANCHORS OR ITW TAPCON SCREWS AS SHOWN BELOW.

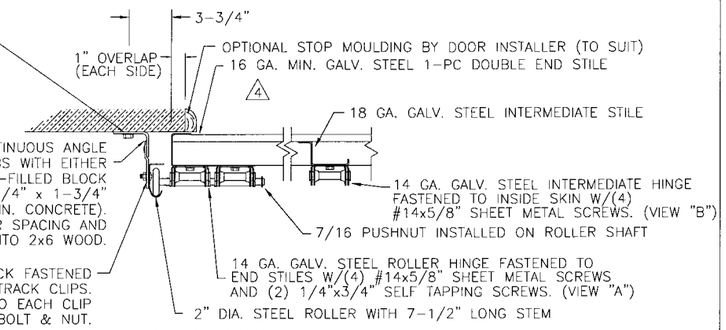

JAMB CONFIGURATION

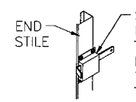

SLIDE BOLT LOCK ENGAGES INTO VERTICAL TRACK. ONE LOCK ON EACH SIDE OF DOOR. 7/8" x .139" x 2.64" THROW BAR. LOCK CONNECTED TO END STILES WITH W/(4) 1/4" x 3/4" SELF TAPPING SCREWS.

INSIDE SLIDE BOLT

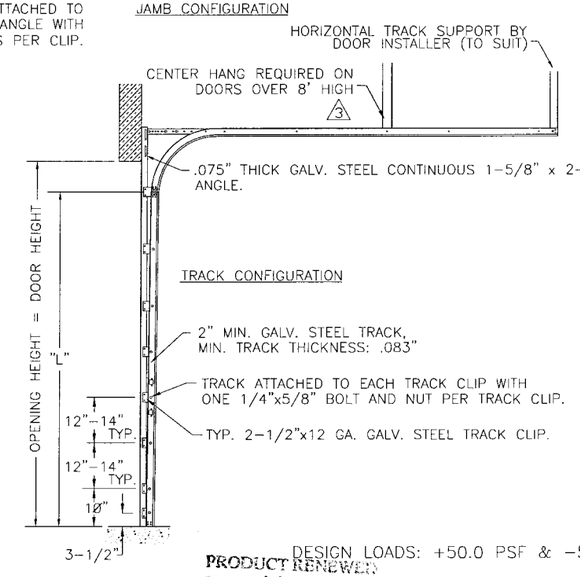

TRACK CONFIGURATION

DESIGN LOADS: +50.0 PSF & -56.0 PSF

PRODUCT RENEWED as complying with the Florida Building Code Acceptance No 08-0212.04 Expiration Date 05/08/2013 By Miami Dade Product Control Division

PRODUCT REVALIDED as complying with the Florida Building Code Acceptance No 08-0212.04 Expiration Date 05/08/2013 By Miami Dade Product Control Division

NOTE: 2x6 WOOD JAMBS ARE NOT REQUIRED, HOWEVER, IF DESIRED ON CONCRETE OR BLOCK WALLS, SLEEVE ANCHORS OR TAPCONS SHOULD BE INCREASED IN LENGTH BY 1-1/2" AND INSTALLED DIRECTLY THROUGH THE ANGLE AND 2x6 WOOD JAMBS INTO THE CONCRETE OR BLOCK WALLS. ANCHORS CAN BE (BUT NOT REQUIRED TO BE) COUNTERSUNK TO PROVIDE A FLUSH MOUNTING SURFACE. CONTINUOUS ANGLE TRACK CAN BE ANCHORED DIRECTLY TO GROUT REINFORCED BLOCK WALL OR 3,000 PSI MIN. CONCRETE COLUMN.

BLOCK CELLS SHALL BE FILLED WITH CONCRETE AND REINFORCED WITH CONTINUOUS #5 BAR EXTENDING INTO THE FOOTING AND INTO TIE BEAMS. ANCHORS CAN BE 3/8" x 2-1/2" WEJ-IT SLEEVE ANCHORS (GROUT-FILLED BLOCK OR 3,000 PSI MIN. CONCRETE WITH 3-3/4" MIN. EDGE DISTANCE) OR 1/4" x 1-3/4" EMBED ITW TAPCONS 3,000 PSI MIN. CONCRETE). ANCHORS POSITIONED AT SAME LOCATIONS AS TRACK CLIPS (I.E. ANCHORS LOCATED STARTING FROM BOTTOM AT 3-1/2", 10", THEN 12" TO 14" ON-CENTER THEREAFTER).

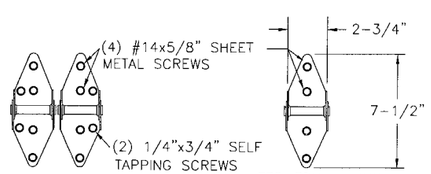

14 GA. END HINGE — VIEW "A"

14 GA. INTERMEDIATE HINGE — VIEW "B"

3/20/08

DESIGN ENGINEER
MARK W. WESTERFIELD, P.E.
MECHANICAL ENGINEERING
FLORIDA REGISTRATION No. 48495

THE SUPPORTING STRUCTURAL ELEMENTS ARE TO BE DESIGNED BY THE BUILDING ARCHITECT OR ENGINEER OF RECORD FOR THE LOADS SHOWN ON THIS DRAWING.

Clopay Building Products Company

CLOPAY BUILDING PRODUCTS COMPANY
8585 DUKE BLVD.
MASON, OH 45040
(513) 770 - 4800

SCALE:	WINDLOAD RATING: W8	MAXIMUM DOOR SIZE: 12'2"W x 18'0"H	
DATE: 11/13/02	DESCRIPTION: M/N 524/52Ø/C4ST/CØST/224		
DRAWN BY: RJK	B	DRAWING NUMBER: 102645 MD	REV: 4
CHECKED BY: MWW			