MIAMI-DADE COUNTY
BUILDING CODE COMPLIANCE OFFICE (BCCO)
PRODUCT CONTROL DIVISION

MIAMI-DADE COUNTY, FLORIDA
METRO-DADE FLAGLER BUILDING
140 WEST FLAGLER STREET, SUITE 1603
MIAMI, FLORIDA 33130-1563
(305) 375-2901 FAX (305) 372-6339
www.maimidade.gov/buildingcode

NOTICE OF ACCEPTANCE (NOA)

CertainTeed Corporation.
803 Belden Road
Jackson, Michigan 49203

SCOPE:

This NOA is being issued under the applicable rules and regulations governing the use of construction materials. The documentation submitted has been reviewed by Miami-Dade County Product Control Division and accepted by the Board of Rules and Appeals (BORA) to be used in Miami Dade County and other areas where allowed by the Authority Having Jurisdiction (AHJ).

This NOA shall not be valid after the expiration date stated below. The Miami-Dade County Product Control Division (In Miami Dade County) and/or the AHJ (in areas other than Miami Dade County) reserve the right to have this product or material tested for quality assurance purposes. If this product or material fails to perform in the accepted manner, the manufacturer will incur the expense of such testing and the AHJ may immediately revoke, modify, or suspend the use of such product or material within their jurisdiction. BORA reserves the right to revoke this acceptance, if it is determined by Miami-Dade County Product Control Division that this product or material fails to meet the requirements of the applicable building code.

This product is approved as described herein, and has been designed to comply with the Florida Building Code, including the High Velocity Hurricane Zone.

DESCRIPTION: WeatherBoard Fiber Cement Siding.

APPROVAL DOCUMENT: Drawing No. **10SBC00164B0000-C** through **10SBC00164B0007-C**, titled: Fiber Cement Panel/Plank, Fiber Cement Random Square Shapes and Fiber Cement Soffit Installation Details Steel/Wood Stud Construction", sheets 1 through 8, prepared by CertainTeed Corporation, dated 01/24/02, with the last revision D dated 04/01/08, signed and sealed by Jose D. Mitrani, P.E., bearing the Miami-Dade County Product Control Revision stamp with the Notice of Acceptance number and expiration date by the Miami-Dade County Product Control Division.

MISSILE IMPACT RATING: Large and Small Missile Impact Resistant

LABELING: Each unit shall bear a permanent label with the manufacturer's name or logo, city, state and following statement: "Miami-Dade County Product Control Approved", unless otherwise noted herein.

RENEWAL of this NOA shall be considered after a renewal application has been filed and there has been no change in the applicable building code negatively affecting the performance of this product.

TERMINATION of this NOA will occur after the expiration date or if there has been a revision or change in the materials, use, and/or manufacture of the product or process. Misuse of this NOA as an endorsement of any product, for sales, advertising or any other purposes shall automatically terminate this NOA. Failure to comply with any section of this NOA shall be cause for termination and removal of NOA.

ADVERTISEMENT: The NOA number preceded by the words Miami-Dade County, Florida, and followed by the expiration date may be displayed in advertising literature. If any portion of the NOA is displayed, then it shall be done in its entirety.

INSPECTION: A copy of this entire NOA shall be provided to the user by the manufacturer or its distributors and shall be available for inspection at the job site at the request of the Building Official.

This NOA **revises and renews NOA # 02-0503.01** and consists of this page 1 and evidence pages E-1 and E-2, as well as approval document mentioned above.

The submitted documentation was reviewed by **Carlos M. Utrera, P.E.**

MIAMI-DADE COUNTY APPROVED

4/22/08

NOA No. 08-0213.05
Expiration Date: April 24, 2013
Approval Date: May 15, 2008

NOTICE OF ACCEPTANCE: EVIDENCE SUBMITTED

E. MATERIAL CERTIFICATIONS

1. None.

F. STATEMENTS

1. Code compliance and no-financial interest letter issued by Jose D. Mitrani, P.E., dated 04/11/08, signed and sealed by Jose D. Mitrani, P.E.

G. OTHER

1. Notice of Acceptance No. **02-0503.01**, issued to CertainTeed Corporation, approved on 04/24/03 and expiring on 04/24/08.

4/22/08

Carlos M. Utrera, P.E.
Product Control Examiner
NOA No. 08-0213.05
Expiration Date: April 24, 2013
Approval Date: May 15, 2008

NOTICE OF ACCEPTANCE: EVIDENCE SUBMITTED

A. DRAWINGS

1. Drawing No. **10SBC00164B0000-C** through **10SBC00164B0007-C**, titled: Fiber Cement Panel/Plank, Fiber Cement Random Square Shapes and Fiber Cement Soffit Installation Details Steel/Wood Stud Construction", sheets 1 through 8, prepared by CertainTeed Corporation, dated 01/24/02, with the last revision D dated 04/01/08, signed and sealed by Jose D. Mitrani, P.E.

B. TESTS

	Report	Test	Date	Signature
1.	AT-01-42883.01	ASTM C1185	03/11/03	A. N. Reeves, P.E.
2.	RT-11168-98	ASTM C1185	02/27/02	B. I. Ogawa, P.E.
3.	HETI 01-1058	TAS 202	08/28/01	H. M. Medina, P.E.
4.	HETI 01-1021	TAS 202	06/06/01	H. M. Medina, P.E.
5.	HETI 01-1000	TAS 202	06/01/01	H. M. Medina, P.E
6.	HETI 01-1036	TAS 203	06/22/01	H. M. Medina, P.E.
7.	HETI 01-1072	TAS 202	09/06/01	H. M. Medina, P.E.
8.	HETI 01-1035	TAS 202	06/22/01	H. M. Medina, P.E.
9.	HETI 01-1023	TAS 202	06/01/01	H. M. Medina, P.E.
10.	HETI 01-1060	TAS 202	08/28/01	H. M. Medina, P.E.
11.	HETI 01-1000	TAS 202	06/01/01	H. M. Medina, P.E.

"Evidence submitted under NOA # 02-0503.01"

C. CALCULATIONS

1. Anchor verification calculations and structural analysis, complying with FBC-2007, dated 04/11/08, prepared, signed and sealed by Jose D. Mitrani, P.E.

2. Fasteners calculations prepared by Jose D. Mitrani, sheets 1 through 19, signed and sealed by Jose D. Mitrani, P.E.
"Evidence submitted under NOA # 02-0503.01"

D. QUALITY ASSURANCE

1. Miami Dade Building Code Compliance Office (BCCO).

4/22/08

Carlos M. Utrera, P.E.
Product Control Examiner
NOA No. 08-0213.05
Expiration Date: April 24, 2013
Approval Date: May 15, 2008

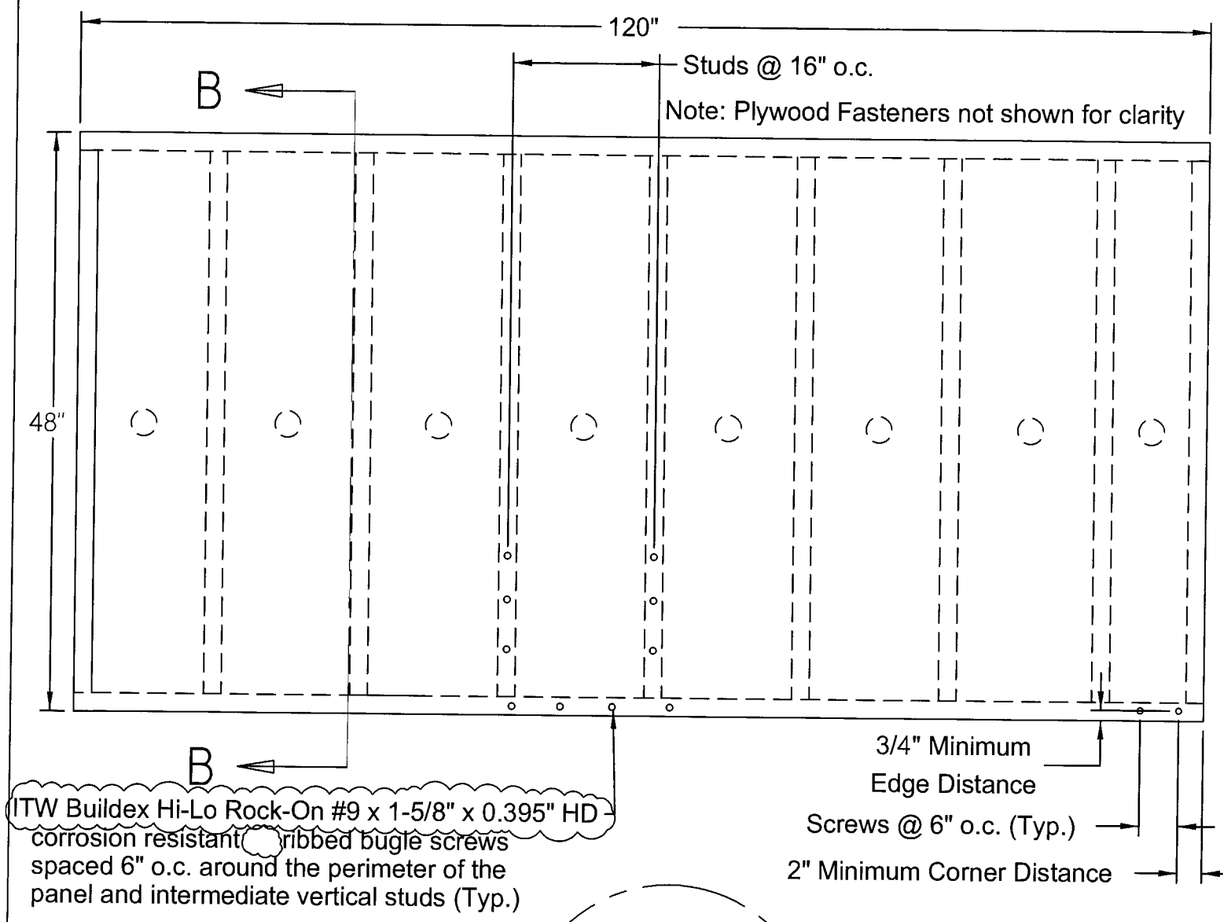

SEE DETAIL A

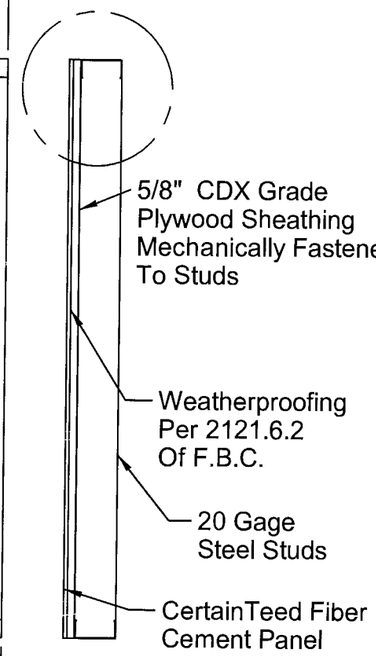

SECTION B-B

PRODUCT REVISED
as complying with the Florida Building Code
Acceptance No 08-0213.05
Expiration Date 04/24/2013
By
Miami/Dade Product Control Division

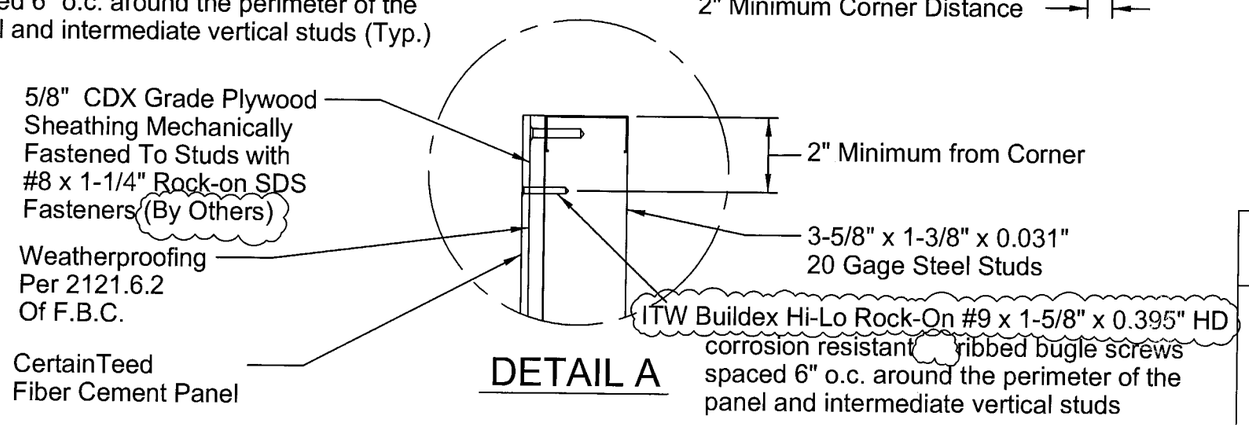

DETAIL A

Product Description

CertainTeed panel material is a non-asbestos fiber Cement product tested in accordance with ASTM C-1185 and meeting the requirements of the Florida Building Code

Panel Dimensions

Width	Length	Thickness
48"	8',9',10'	5/16"

Design Pressure Rating

Installation on:	Design Pressure:
Steel Studs	-115 PSF

Impact Resistant - Panels installed over 5/8" plywood sheathing

Installation Notes

1. All installation shall be done in conformance with this Notice of Acceptance, the manufacturer's installation recommendations and the requirements of the Florida Building Code.
2. Metal studs on to which CertainTeed Fiber Cement Panels will be installed shall be designed by a Registered Professional Engineer or Licensed Architect per the F.B.C. and the requirements of this N.O.A.
3. Panels are to be installed vertically, avoiding horizontal joints, over 5/8" CDX grade APA rated plywood supported by 20 gage x 3-5/8" x 1-3/8" steel studs spaced a maximum of 16" o.c.
4. CertainTeed fiber cement panels shall be fastened with ITW Buildex Hi-Lo Rock-On #9 x 1-5/8" x 0.395" HD corrosion resistant ribbed bugle screws.
5. Fasteners shall be placed 6" o.c. around the perimeter of the panel and intermediate vertical studs, driven through the plywood sheathing into the studs. All joints shall be over studs and screws shall have a minimum edge distance of 3/4" and minimum clearance of 2" from the corners.

General Notes

1. Wall receiving Fiber Cement Panels shall be checked for structural adequacy (By Others)
2. Walls shall be weather proofed with the equivalent of 15 pound felt as described in section 2121.6.2 of the F.B.C.

Jose' D. Mitrani P.E.
10642 S.W. 129 Place
Miami, Florida 33186
Fla. Reg. # PE 19943

04/11/08

REVISION	DATE	BY	DESCRIPTION
C	08/29/02	RA	BCCO 7/31/2002 REVIEW
D	04/01/08	NJS	Rev. 2007 FBC

CertainTeed
©2002 CERTAINTEED CORPORATION

Siding Products Group
Technology Center
803 Belden Road
Jackson, Michigan 49203

TITLE: FIBER CEMENT PANEL INSTALLATION DETAILS STEEL STUD CONSTRUCTION

DATE: 01/24/02

DRAWN BY: B. SHAW

SHEET: 1 OF: 8

DRAWING NUMBER: 10SBC00164B0000-C

SCALE: NONE

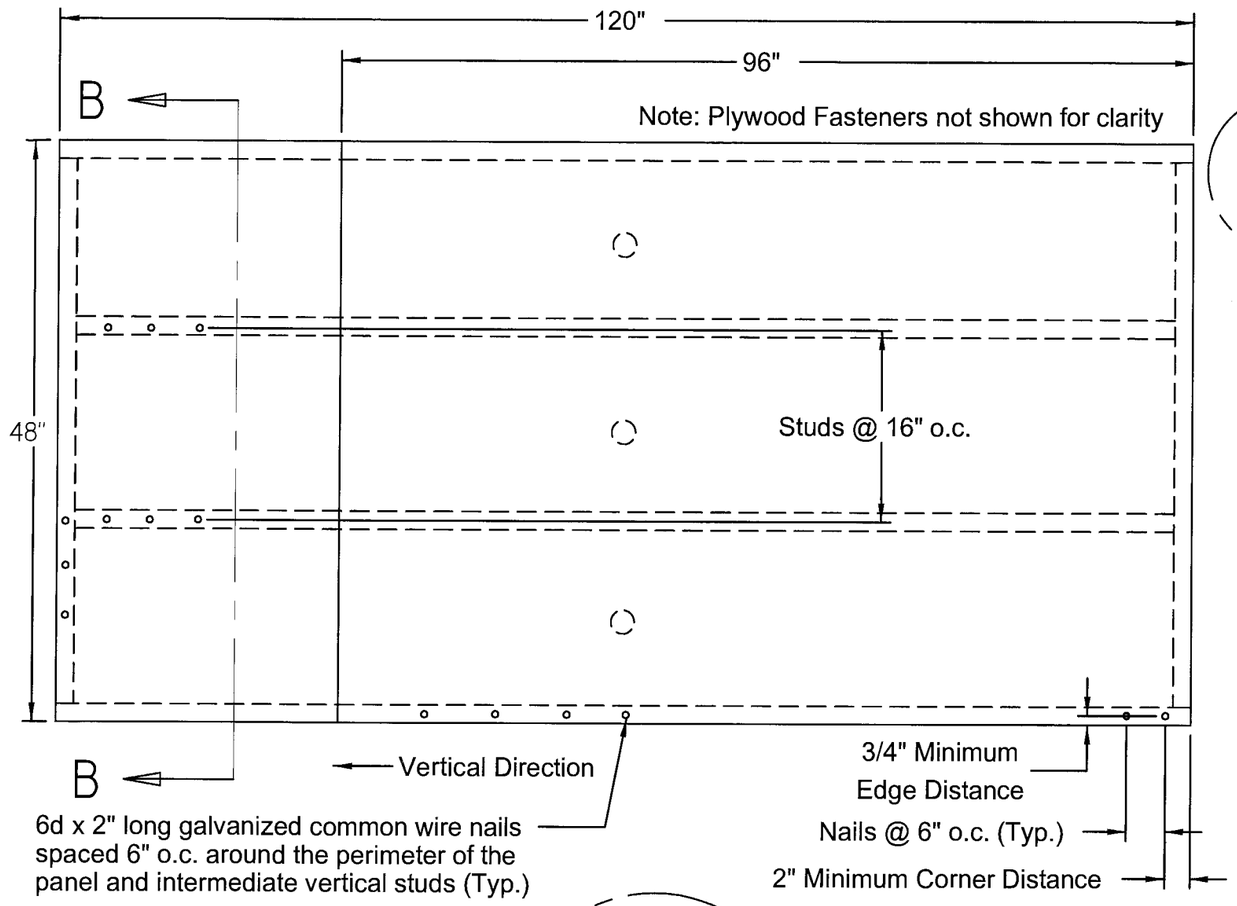

SEE DETAIL A

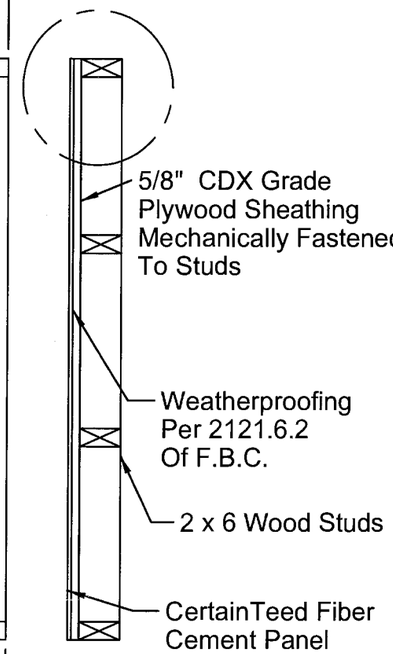

SECTION B-B

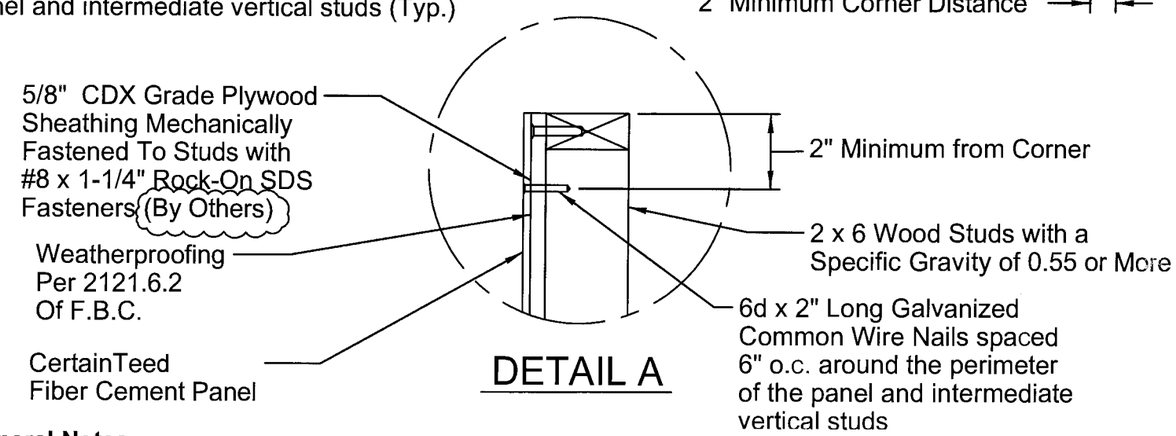

DETAIL A

General Notes

1. Wall receiving Fiber Cement Panels shall be checked for structural adequacy (By Others)
2. Walls shall be weather proofed with the equivalent of 15 pound felt as described in section 2121.6.2 of the F.B.C.

Product Description

CertainTeed panel material is a non-asbestos Fiber Cement product tested in accordance with ASTM C-1185 and meeting the requirements of the Florida Building Code

Panel Dimensions

Width	Length	Thickness
48"	8',9',10'	5/16"

Design Pressure Rating

Installation on:	Design Pressure:
Wood Studs	-76 PSF

Impact Resistant - Panels installed over 5/8" plywood sheathing

Installation Notes

1. All installation shall be done in conformance with this Notice of Acceptance, the manufacturer's installation recommendations and the requirements of the Florida Building Code.
2. Wood studs on to which CertainTeed Fiber Cement Panels will be installed shall be designed by a Registered Professional Engineer or Licensed Architect per the F.B.C. and the requirements of this N.O.A.
3. Panels are to be installed vertically, avoiding horizontal joints, over 5/8" CDX grade APA rated plywood supported by 2 x 6 wood studs with a specific gravity of 0.55 or more spaced a maximum of 16" o.c.
4. CertainTeed Fiber Cement Panels shall be fastened with 6d x 2" long galvanized common wire nails.
5. Fasteners shall be placed 6" o.c. around the perimeter of the panel and intermediate vertical studs, driven through the plywood sheathing into the studs. All joints shall be over studs and nails shall have a minimum edge distance of 3/4" and minimum clearance of 2" from the corners.

PRODUCT REVISED
as complying with the Florida Building Code
Acceptance No 03-0213.05
Expiration Date 04/24/2013
By
Miami Dade Product Control Division

Jose' D. Mitrani P.E.
10642 S.W. 129 Place
Miami, Florida 33186
Fla. Reg. # PE 19943

REVISION	DATE	BY	DESCRIPTION
C	08/29/02	RA	BCCO 7/31/2002 REVIEW
D	04/01/08	NJS	Rev. 2007 FBC

CertainTeed
©2002 CERTAINTEED CORPORATION
Siding Products Group
Technology Center
803 Belden Road
Jackson, Michigan 49203

TITLE: FIBER CEMENT PANEL INSTALLATION DETAILS WOOD STUD CONSTRUCTION

DATE: 01/24/02
DRAWN BY: B. SHAW
SHEET: 2 OF: 8
DRAWING NUMBER: 10SBC00164B0001-C
SCALE: NONE

04/11/08

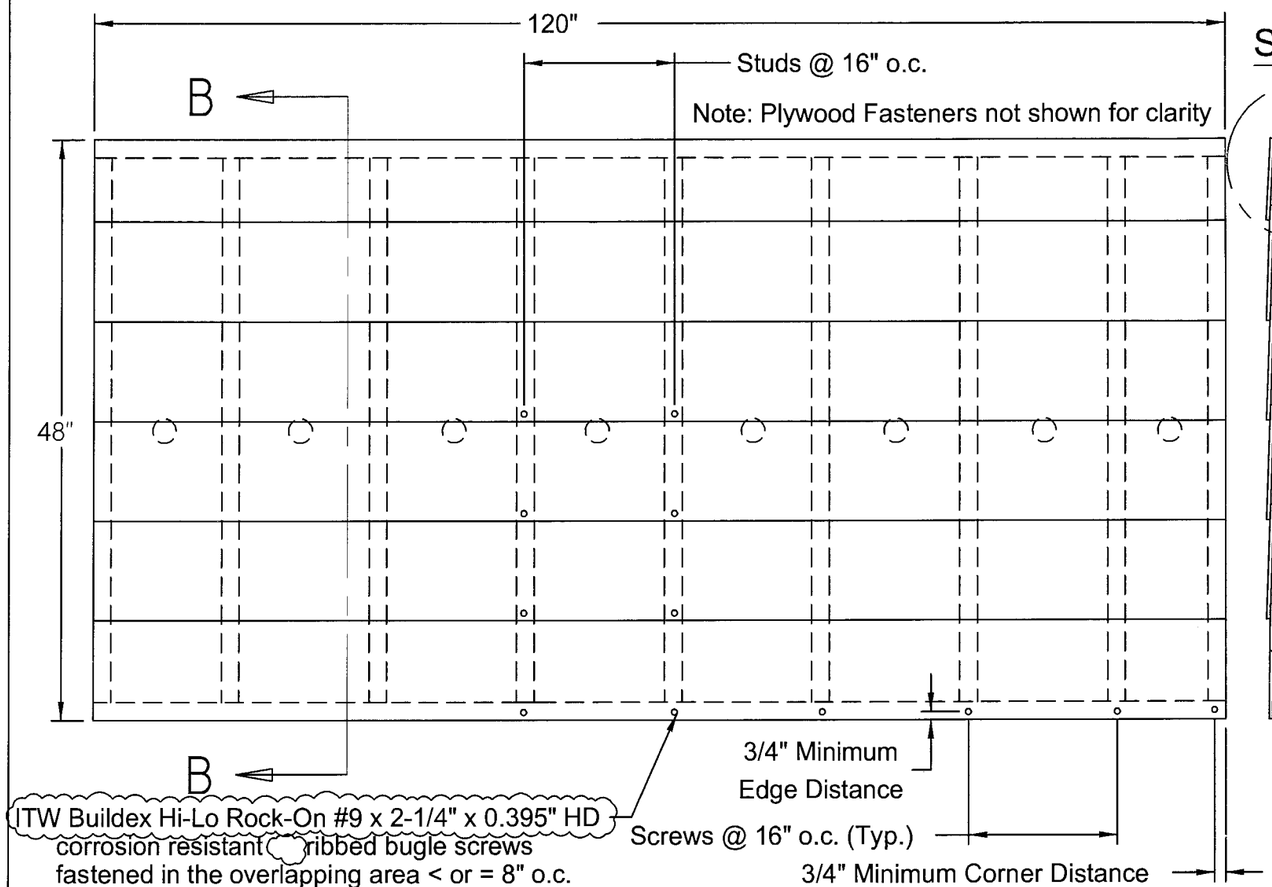

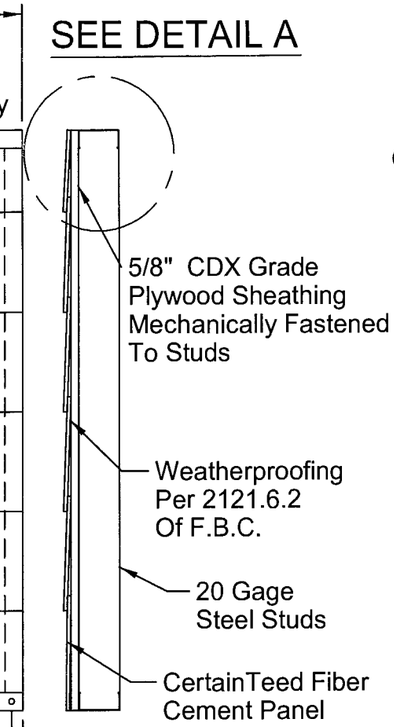

PRODUCT REVISED
as complying with the Florida Building Code
Acceptance No 08-0213.05
Expiration Date 04/24/2013
By _____
Miami Dade Product Control Division

Product Description

CertainTeed plank material is a non-asbestos fiber Cement product tested in accordance with ASTM C-1185 and meeting the requirements of the Florida Building Code.

Plank Dimensions

Width	Length	Thickness
≤ 9-1/2"	12'	5/16"

Design Pressure Rating

Installation:	Design Pressure:
Steel Studs	-92 PSF

Impact Resistant - Planks installed over 5/8" plywood sheathing

Installation Notes

1. All installation shall be done in conformance with this Notice of Acceptance, the manufacturer's installation recommendations and the requirements of the Florida Building Code.
2. Metal studs on to which CertainTeed Fiber Cement Planks will be installed shall be designed by a Registered Professional Engineer or Licensed Architect per the F.B.C. and the requirements of this N.O.A.
3. Planks are to be installed horizontally commencing from the bottom course of a wall with 1-1/4" wide laps at the top of the plank. The vertical joints must be over framing members. Optional PVC butt joint inserts are used for on-stud jointing.
4. Planks are to be installed over 5/8" CDX grade APA rated plywood supported by 20 gage x 3-5/8" x 1-3/8" steel studs spaced a maximum of 16" o.c.
5. CertainTeed fiber cement planks shall be fastened through the overlapping planks with ITW Buildex Hi-Lo Rock-On #9 x 2-1/4" x 0.395" HD corrosion resistant ribbed bugle screws.
6. The fasteners shall be placed in the overlapping area ≤ 8" o.c. vertically and 16" o.c. horizontally through the plywood sheathing into the studs. Screws shall have a minimum edge distance of 3/4".

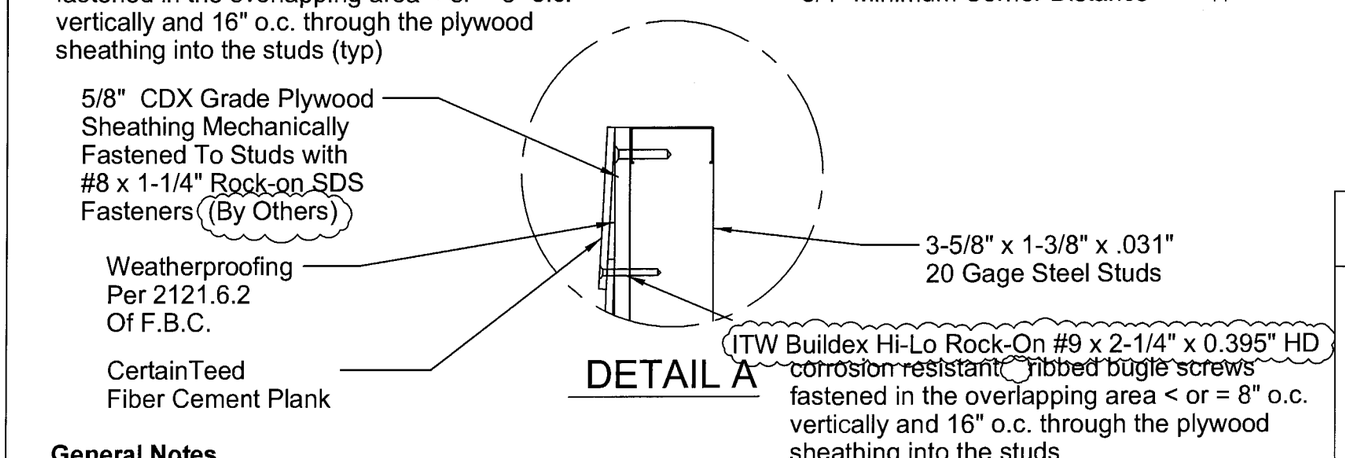

General Notes

1. Wall receiving Fiber Cement Planks shall be checked for structural adequacy (By Others)
2. Walls shall be weather proofed with the equivalent of 15 pound felt as described in section 2121.6.2 of the F.B.C.

Jose' D. Mitrani P.E.
10642 S.W. 129 Place
Miami, Florida 33186
Fla. Reg. # PE 19943

REVISION	DATE	BY	DESCRIPTION
C	08/29/02	RA	BCCO 7/31/2002 REVIEW
D	04/01/08	NJS	Rev. 2007 FBC

CertainTeed
©2002 CERTAINTEED CORPORATION

Siding Products Group
Technology Center
803 Belden Road
Jackson, Michigan 49203

TITLE: FIBER CEMENT PLANK INSTALLATION DETAILS
STEEL STUD CONSTRUCTION

DATE: 01/24/02
DRAWN BY: B. SHAW
SHEET: 3 OF: 8
DRAWING NUMBER: 10SBC00164B0002-C
SCALE: NONE

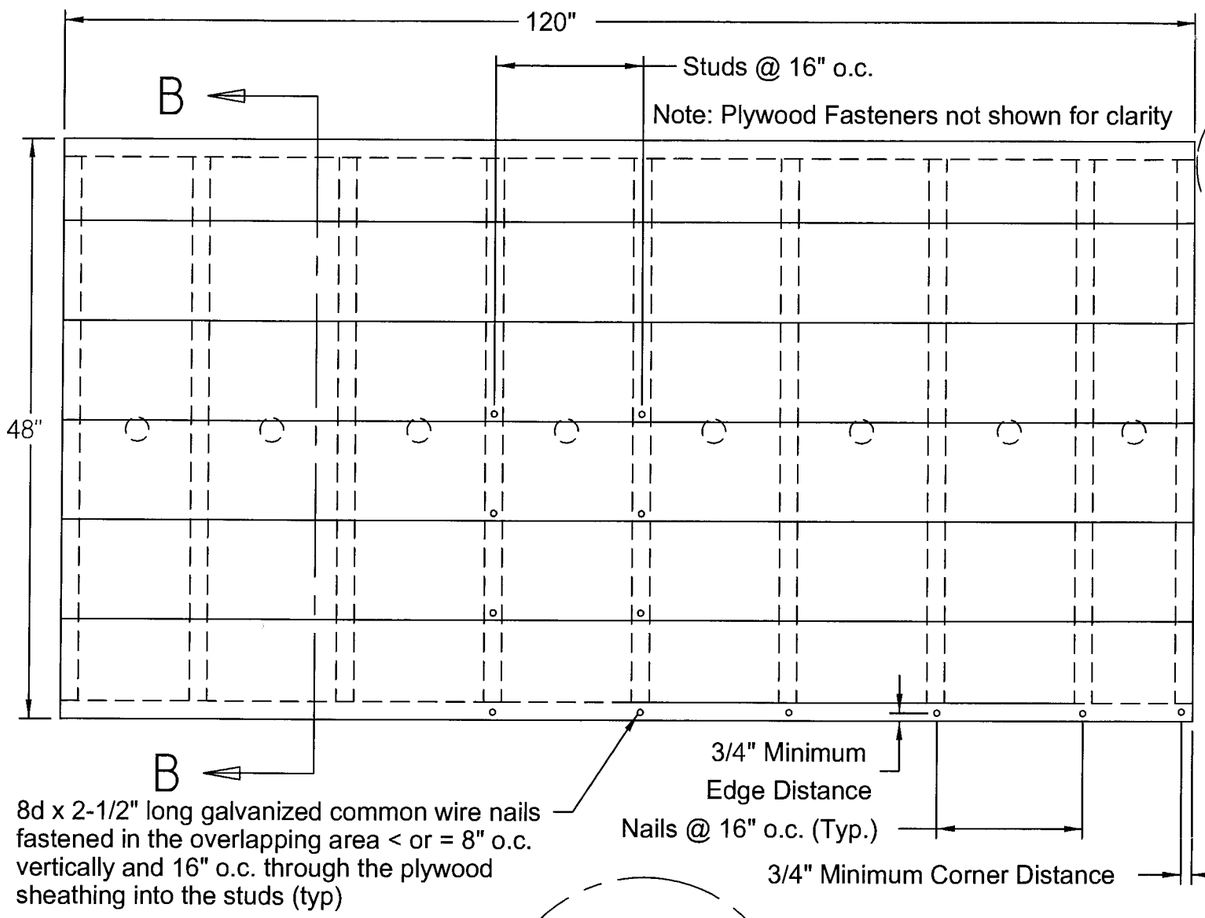

SEE DETAIL A

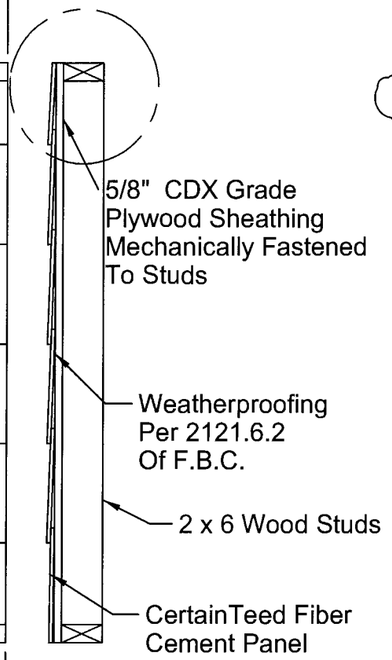

SECTION B-B

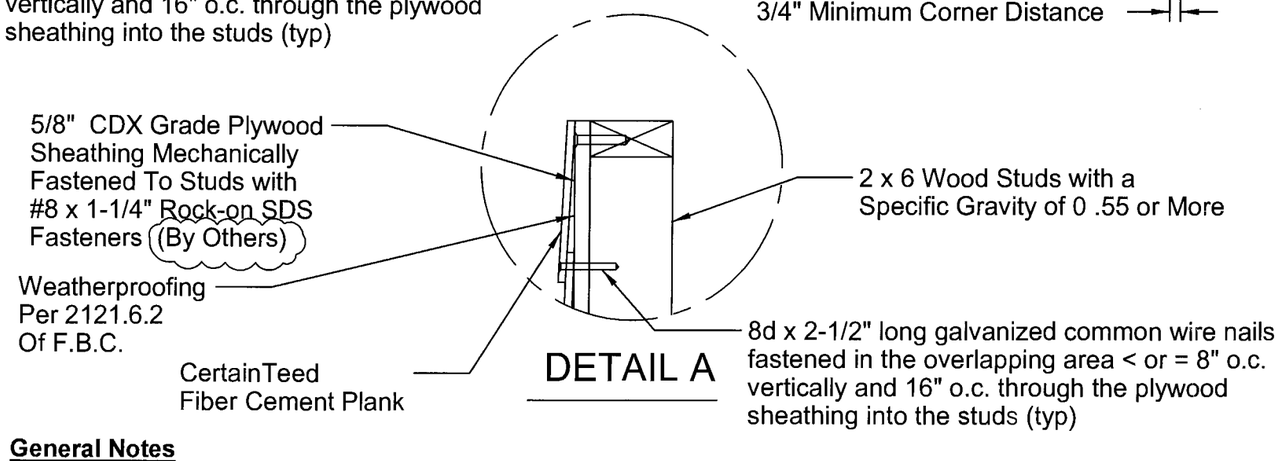

DETAIL A

General Notes

1. Wall receiving Fiber Cement Planks shall be checked for structural adequacy (By Others)
2. Walls shall be weather proofed with the equivalent of 15 pound felt as described in section 2121.6.2 of the F.B.C.

Product Description

CertainTeed plank material is a non-asbestos fiber Cement product tested in accordance with ASTM C-1185 and meeting the requirements of the Florida Building Code.

Plank Dimensions

Width	Length	Thickness
≤ 9-1/2"	12'	5/16"

Design Pressure Rating

Installation:	Design Pressure:
Wood Studs	-91 PSF

Impact Resistant - Planks installed over 5/8" plywood sheathing

Installation Notes

1. All installation shall be done in conformance with this Notice of Acceptance, the manufacturer's installation recommendations and the requirements of the Florida Building Code.
2. Wood studs on to which CertainTeed Fiber Cement Planks will be installed shall be designed by a Registered Professional Engineer or Licensed Architect per the F.B.C. and the requirements of this N.O.A.
3. Planks are to be installed horizontally commencing from the bottom course of a wall with 1-1/4" wide laps at the top of the plank. The vertical joints must be over framing members. Optional PVC butt joint inserts are used for on-stud jointing.
4. Planks are to be installed over 5/8" CDX grade APA rated plywood supported by 2 x 6 Wood studs with a specific gravity of 0.55 or more spaced a maximum of 16" o.c.
5. CertainTeed fiber cement planks shall be fastened through the overlapping planks with 8d x 2-1/2" long galvanized common wire nails.
6. The fasteners shall be placed in the overlapping area ≤ 8" o.c. vertically and 16" o.c. horizontally through the plywood sheathing into the studs. Screws shall have a minimum edge distance of 3/4".

PRODUCT REVISED
as complying with the Florida Building Code
Acceptance No 03-0213.05
Expiration Date 04/24/2013
By
Miami Dade Product Control Division

Jose' D. Mitrani P.E.
10642 S.W. 129 Place
Miami, Florida 33186
Fla. Reg. # PE 19943

REVISION	DATE	BY	DESCRIPTION
C	08/29/02	RA	BCCO 7/31/2002 REVIEW
D	04/01/08	NJS	Rev. 2007 FBC

CertainTeed
©2002 CERTAINTEED CORPORATION

Siding Products Group
Technology Center
803 Belden Road
Jackson, Michigan 49203

TITLE: FIBER CEMENT PLANK INSTALLATION DETAILS WOOD STUD CONSTRUCTION

DATE: 01/24/02
DRAWN BY: B. SHAW
SHEET: 4 OF: 8
DRAWING NUMBER: 10SBC00164B0003-C
SCALE: NONE

04/11/08

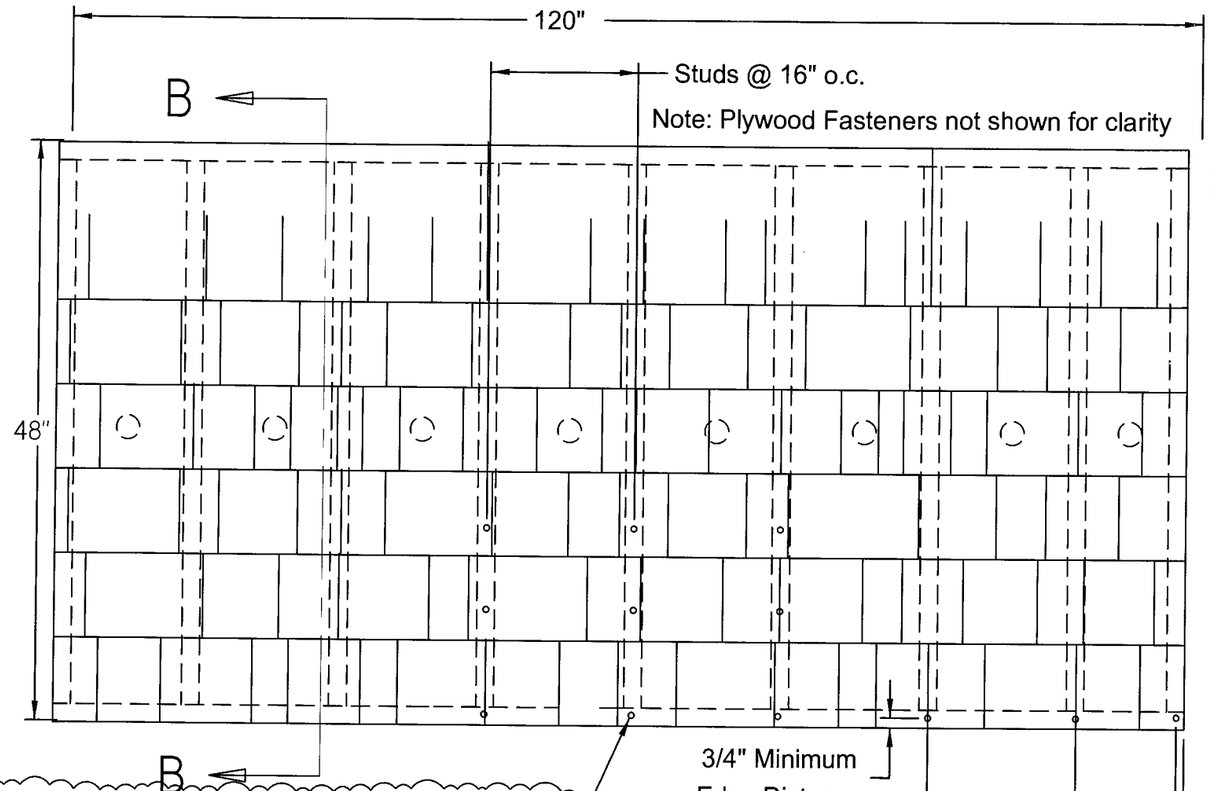

ITW Buildex Hi-Lo Rock-On #9 x 2-1/4" x 0.395" HD corrosion resistant ribbed bugle screws fastened in the overlapping area above the top of the keyway and 16" o.c. horizontally through the plywood sheathing into the studs. Fasteners vertical spacing not to exceed 8" o.c.

SEE DETAIL A

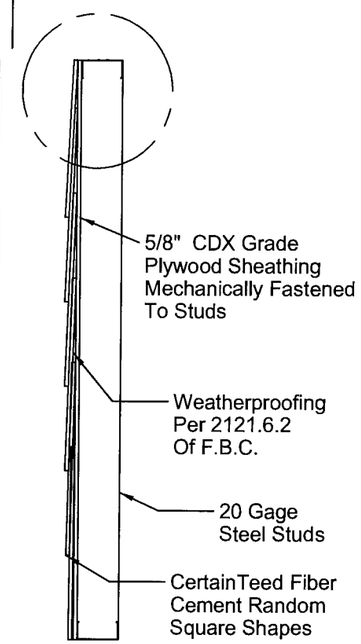

SECTION B-B

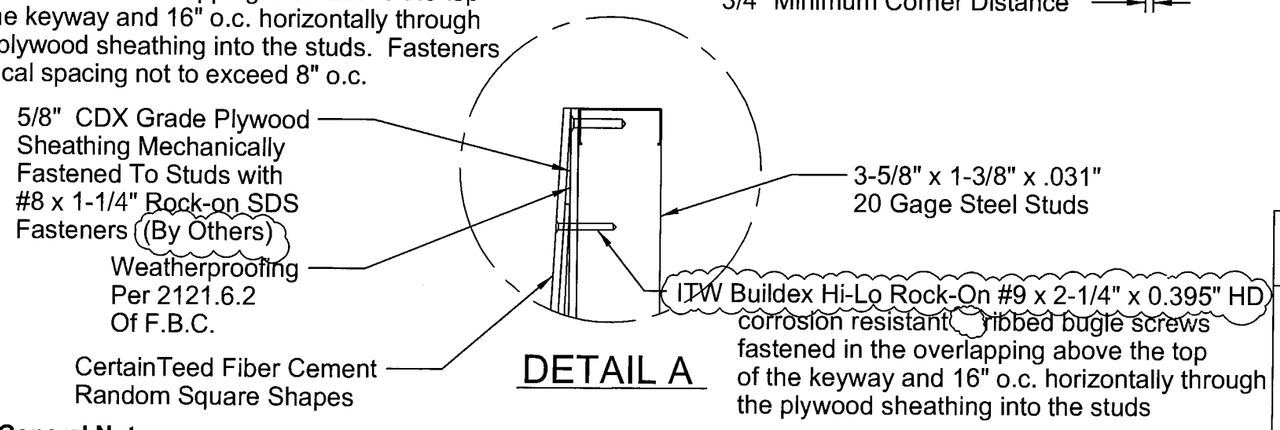

DETAIL A

PRODUCT REVISED
as complying with the Florida Building Code
Acceptance No 08-0213.05
Expiration Date 04/24/2013
By
Miami Dade Product Control Division

Product Description

CertainTeed random square material is a non-asbestos Fiber Cement product tested in accordance with ASTM C-1185 and meeting the requirements of the Florida Building Code.

Plank Dimensions

Width	Length	Thickness
16"	4'	5/16"

Design Pressure Rating

Installation on:	Design Pressure:
Steel Studs	-95 PSF

Impact Resistant - Planks installed over 5/8" plywood sheathing

Installation Notes

1. All installation shall be done in conformance with this Notice of Acceptance, the manufacturer's installation recommendations and the requirements of the Florida Building Code.
2. Metal studs on to which CertainTeed Fiber Cement Random Square Shapes will be installed shall be designed by a Registered Professional Engineer or Licensed Architect per the F.B.C. and the requirements of this N.O.A.
3. Random Square Shapes are to be installed horizontally commencing from the bottom course of a wall. The vertical joints must be over framing members. Overlap dimension is 9".
4. Random Square Shapes are to be installed over 5/8" CDX grade APA rated plywood supported by 20 gage x 3-5/8" x 1-3/8" steel studs spaced a maximum of 16" o.c.
5. CertainTeed Fiber Cement Random Shapes shall be fastened through the overlapping planks with ITW Buildex Hi-Lo Rock-On #9 x 2-1/4" x 0.395" HD corrosion resistant ribbed bugle screws.
6. The fasteners shall be placed in the overlapping area above the top of the keyway and 16" o.c. horizontally through the plywood sheathing into the studs. Screws shall have a minimum edge distance of 3/4". Vertical spacing not to exceed 8" o.c.

General Notes

1. Wall receiving Fiber Cement Random Square Shapes shall be checked for structural adequacy (By Others)
2. Walls shall be weather proofed with the equivalent of 15 pound felt as described in section 2121.6.2 of the F.B.C.

Jose' D. Mitrani P.E.
10642 S.W. 129 Place
Miami, Florida 33186
Fla. Reg. # PE 19943

REVISION	DATE	BY	DESCRIPTION
C	08/29/02	RA	BCCO 7/31/2002 REVIEW
D	04/01/08	NJS	Rev. 2007 FBC

CertainTeed
©2002 CERTAINTEED CORPORATION
Siding Products Group
Technology Center
803 Belden Road
Jackson, Michigan 49203

TITLE: FIBER CEMENT RANDOM SQUARE SHAPES INSTALLATION DETAILS: STEEL STUD CONSTRUCTION

DATE: 01/24/02
DRAWN BY: B. SHAW
SHEET: 5 OF: 8
DRAWING NUMBER: 10SBC00164B0004-C
SCALE: NONE

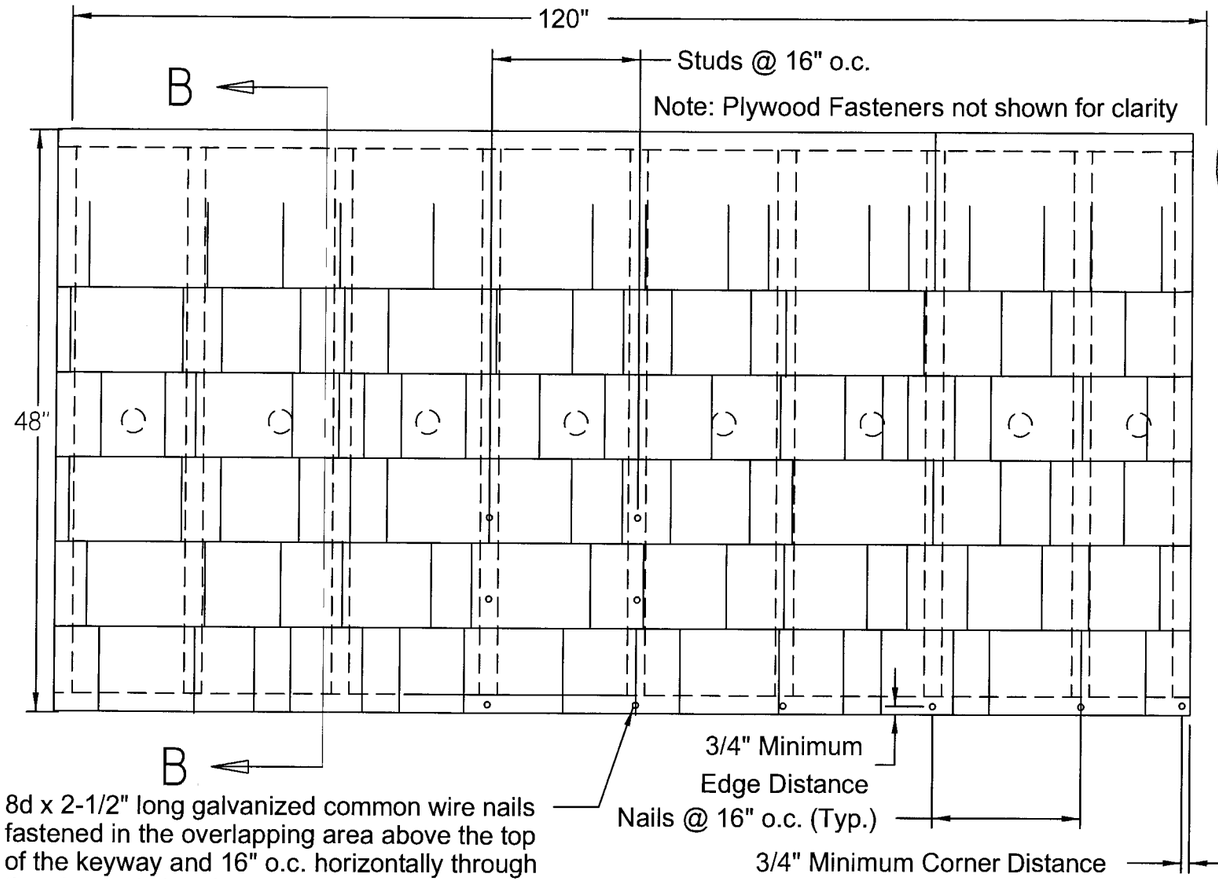

SEE DETAIL A

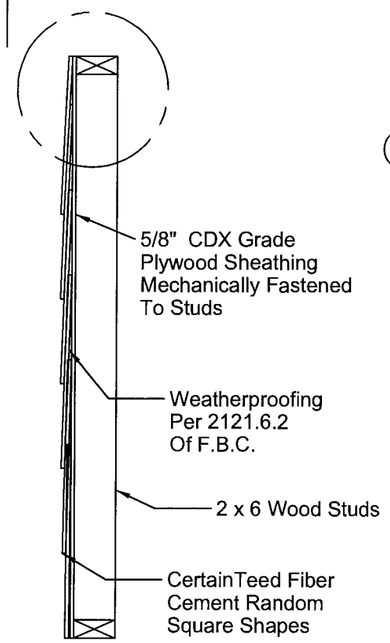

SECTION B-B

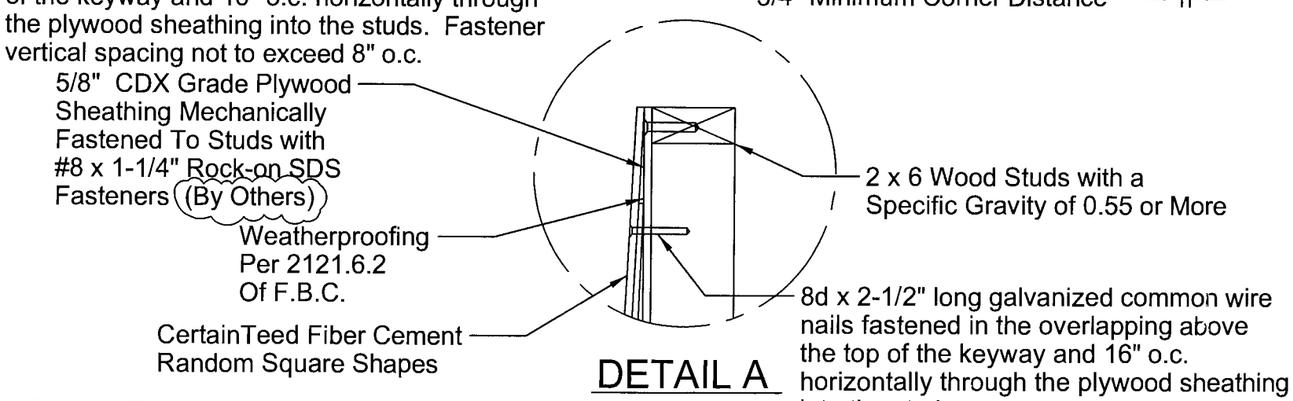

DETAIL A

Product Description

CertainTeed random square material is a non-asbestos Fiber Cement product tested in accordance with ASTM C-1185 and meeting the requirements of the Florida Building Code.

Plank Dimensions

Width	Length	Thickness
16"	4'	5/16"

Design Pressure Rating

Installation on:	Design Pressure:
Wood Studs	-91 PSF

Impact Resistant - Planks installed over 5/8" plywood sheathing

Installation Notes

1. All installation shall be done in conformance with this Notice of Acceptance, the manufacturer's installation recommendations and the requirements of the Florida Building Code.
2. Wood studs on to which CertainTeed Fiber Cement Random Square Shapes will be installed shall be designed by a Registered Professional Engineer or Licensed Architect per the F.B.C. and the requirements of this N.O.A.
3. Random Square Shapes are to be installed horizontally commencing from the bottom course of a wall. The vertical joints must be over framing members. Overall dimension is 9".
4. Random Square Shapes are to be installed over 5/8" CDX grade APA rated plywood supported by 2 x 6 wood studs with a specific gravity of 0.55 or more spaced a maximum of 16" o.c.
5. Random Square Shapes shall be fastened through the overlapping planks with 8d x 2-1/2" galvanized common wire nails.
6. The fasteners shall be placed in the overlapping area above the top of the keyway and 16" o.c. horizontally through the plywood sheathing into the studs. Screws shall have a minimum edge distance of 3/4". Vertical spacing not to exceed 8" o.c.

PRODUCT REVISED
as complying with the Florida Building Code
Acceptance No 08-0213.05
Expiration Date 04/24/2013
By
Miami Dade Product Control Division

General Notes

1. Wall receiving Fiber Cement Random Square Shapes shall be checked for structural adequacy (By Others)
2. Walls shall be weather proofed with the equivalent of 15 pound felt as described in section 2121.6.2 of the F.B.C.

Jose' D. Mitrani P.E.
10642 S.W. 129 Place
Miami, Florida 33186
Fla. Reg. # PE 19943

REVISION	DATE	BY	DESCRIPTION
C	08/29/02	RA	BCCO 7/31/2002 REVIEW
D	04/01/08	NJS	Rev. 2007 FBC

CertainTeed
©2002 CERTAINTEED CORPORATION

Siding Products Group
Technology Center
803 Belden Road
Jackson, Michigan 49203

TITLE: FIBER CEMENT RANDOM SQUARE SHAPES INSTALLATION DETAILS: WOOD STUD CONSTRUCTION

DATE: 01/24/02 | DRAWN BY: B. SHAW

SHEET: 6 OF: 8 | DRAWING NUMBER: 10SBC00164B0005-C

SCALE: NONE

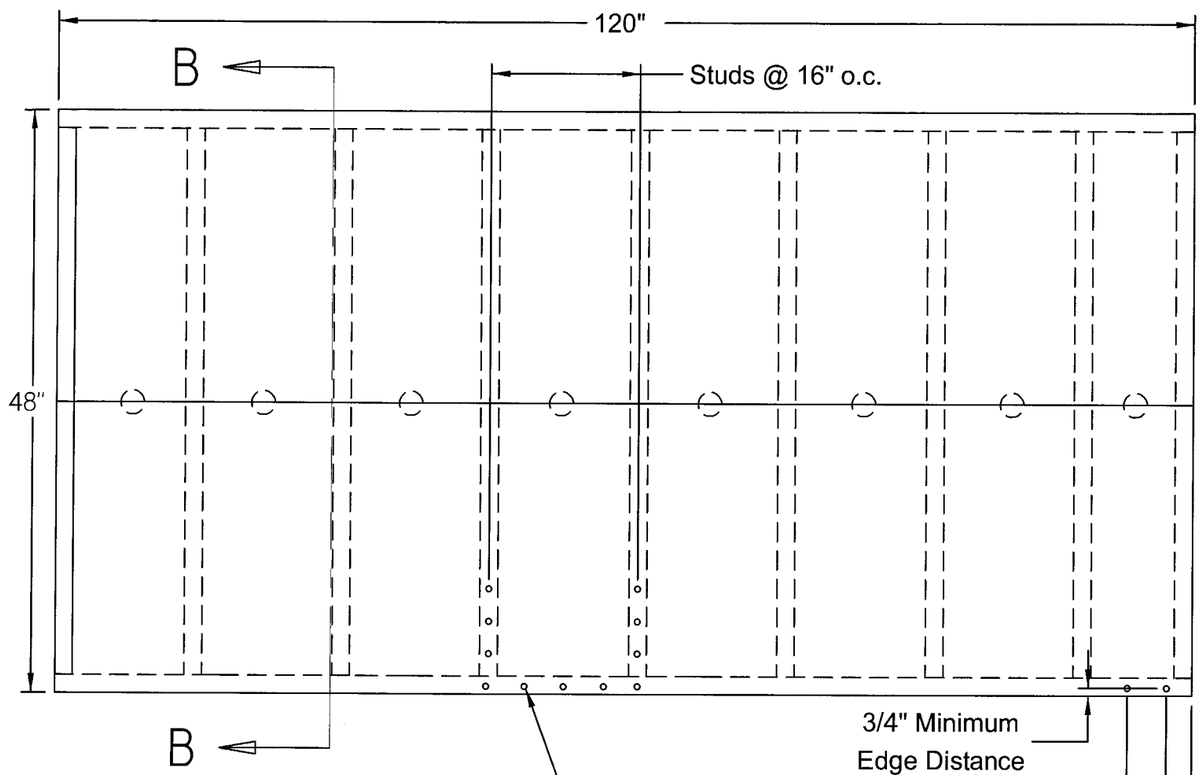

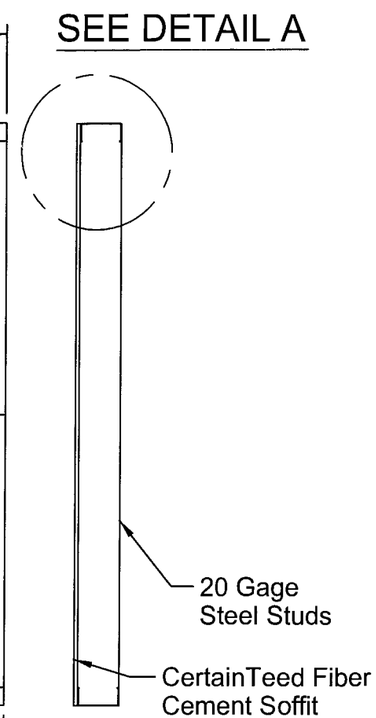

SECTION B-B

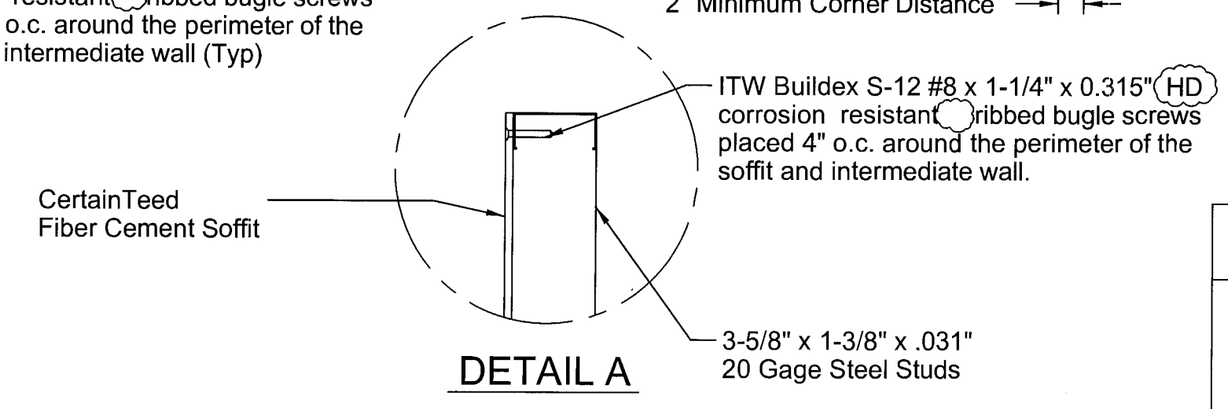

DETAIL A

Product Description

CertainTeed Soffit material is a non-asbestos fiber Cement product tested in accordance with ASTM C-1185 and meeting the requirements of the Florida Building Code

Soffit Dimensions

Width	Length	Thickness
≤ 24"	12'	5/16"

Design Pressure Rating

Installation in:	Design Pressure:
Steel Studs	-70 PSF

Installation Notes

1. All installation shall be done in conformance with this Notice of Acceptance, the manufacturer's installation recommendations and the requirements of the Florida Building Code.
2. Metal studs on to which CertainTeed Fiber Cement Soffit will be installed shall be designed by a Registered Professional Engineer or Licensed Architect per the F.B.C. and the requirements of this N.O.A.
3. Soffits are to be installed over 20 gage x 3-5/8" x 1-3/8" steel studs spaced a maximum of 16" o.c.
4. CertainTeed Fiber Cement Soffit shall be fastened with ITW Buildex S-12 #8 x 1-1/4" x 0.315" HD corrosion resistant ribbed bugle screws.
5. Fasteners shall be placed 4" o.c. around the perimeter of the panel and intermediate wall. All joints shall be over studs, screws shall have a minimum edge distance of 3/4" and minimum clearance of 2" from the corners.

PRODUCT REVISED
as complying with the Florida Building Code
Acceptance No 08-0213.05
Expiration Date 04/24/2013
By
Miami Dade Product Control Division

General Notes

1. Studs receiving Fiber Cement Soffit shall be checked for structural adequacy (By Others)

Jose' D. Mitrani P.E.
10642 S.W. 129 Place
Miami, Florida 33186
Fla. Reg. # PE 19943

REVISION	DATE	BY	DESCRIPTION
C	08/29/02	RA	BCCO 7/31/2002 REVIEW
D	04/01/08	NJS	Rev. 2007 FBC

CertainTeed
©2002 CERTAINTEED CORPORATION

Siding Products Group
Technology Center
803 Belden Road
Jackson, Michigan 49203

TITLE: FIBER CEMENT SOFFIT INSTALLATION DETAILS
STEEL STUD CONSTRUCTION

DATE: 01/24/02
DRAWN BY: B. SHAW
SHEET: 7 OF: 8
DRAWING NUMBER: 10SBC00164B0006-C
SCALE: NONE

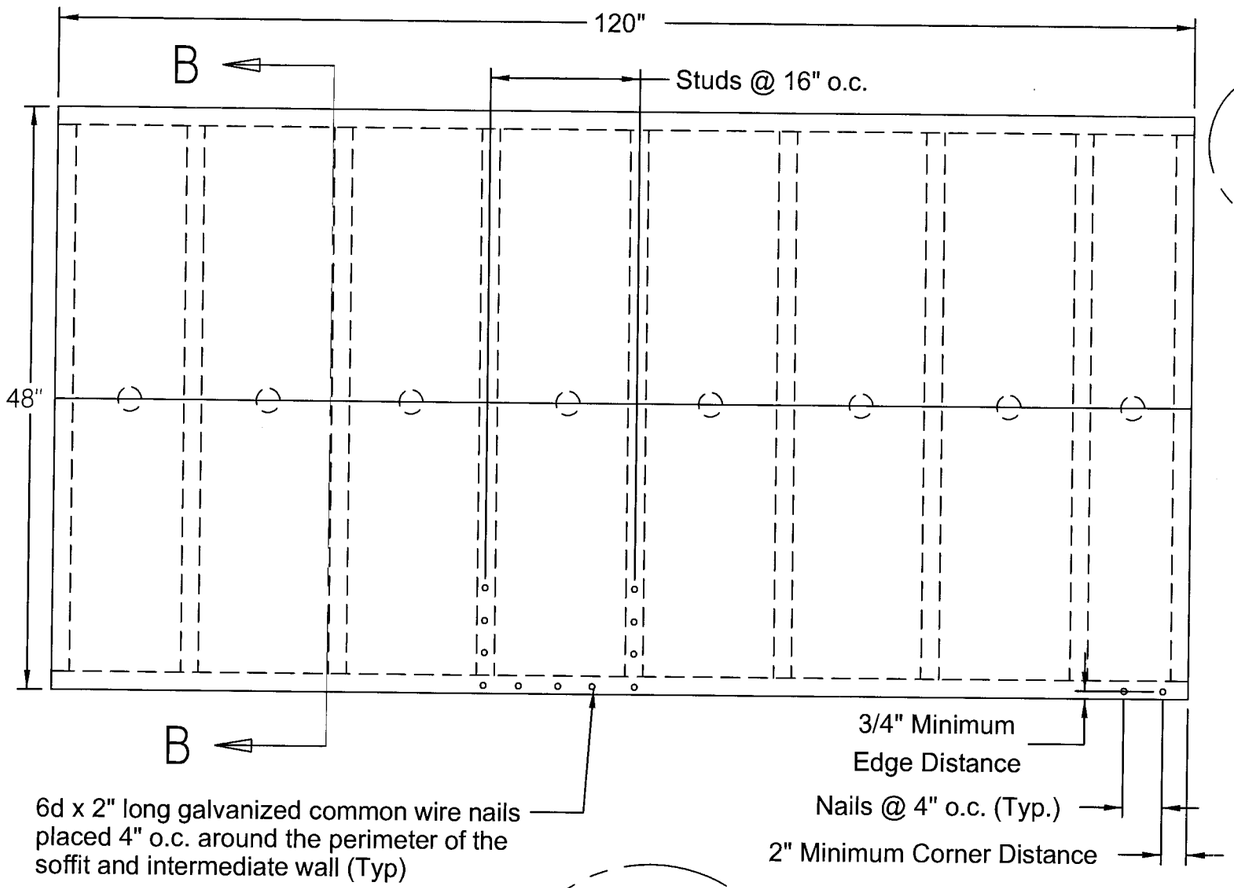

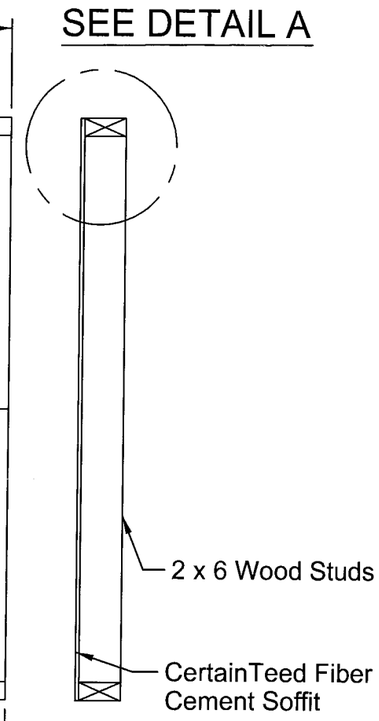

Product Description

CertainTeed Soffit material is a non-asbestos fiber Cement product tested in accordance with ASTM C-1185 and meeting the requirements of the Florida Building Code

Soffit Dimensions

Width	Length	Thickness
≤ 24"	12'	5/16"

Design Pressure Rating

Installation on:	Design Pressure:
Wood Studs	-70 PSF

Installation Notes

1. All installation shall be done in conformance with this Notice of Acceptance, the manufacturer's installation recommendations and the requirements of the Florida Building Code.
2. Wood studs on to which CertainTeed Fiber Cement Soffit will be installed shall be designed by a Registered Professional Engineer or Licensed Architect per the F.B.C. and the requirements of this N.O.A.
3. Soffits are to be installed over 2 x 6 wood studs with a specific gravity of 0.55 or more spaced a maximum of 16" o.c.
4. CertainTeed Fiber Cement Soffit shall be fastened with 6d x 2" long galvanized common wire nails.
5. Fasteners shall be placed 4" o.c. around the perimeter of the panel and intermediate wall. All joints shall be over studs, screws shall have a minimum edge distance of 3/4" and minimum clearance of 2" from the corners.

PRODUCT REVISED
as complying with the Florida Building Code
Acceptance No 08-0213.05
Expiration Date 04/24/2013
By
Miami-Dade Product Control Division

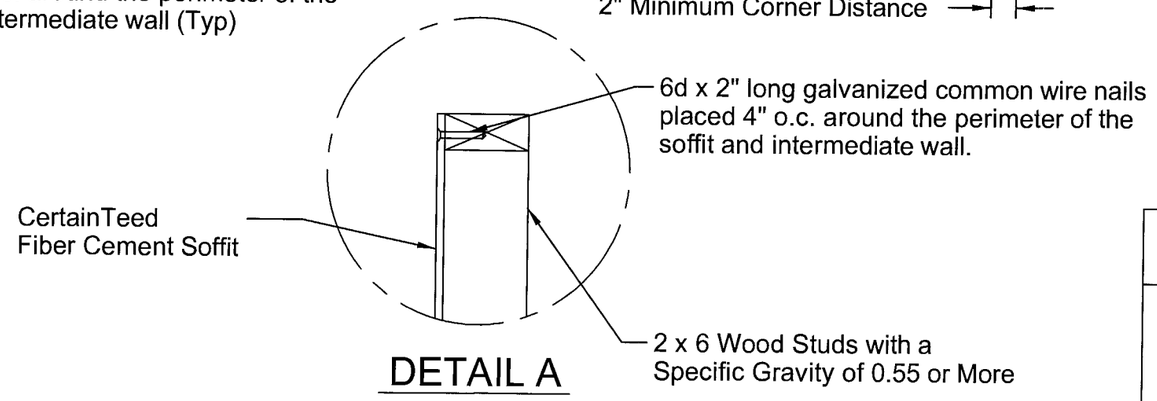

General Notes

1. Studs receiving Fiber Cement Soffit shall be checked for structural adequacy (By Others)

Jose' D. Mitrani P.E.
10642 S.W. 129 Place
Miami, Florida 33186
Fla. Reg. # PE 19943

REVISION	DATE	BY	DESCRIPTION
C	08/29/02	RA	BCCO 7/31/2002 REVIEW
D	04/01/08	NJS	Rev. 2007 FBC

CertainTeed
©2002 CERTAINTEED CORPORATION

Siding Products Group
Technology Center
803 Belden Road
Jackson, Michigan 49203

TITLE: FIBER CEMENT SOFFIT INSTALLATION DETAILS WOOD STUD CONSTRUCTION

DATE: 01/24/02
DRAWN BY: B. SHAW
SHEET: 8 OF: 8
DRAWING NUMBER: 10SBC00164B0007-C
SCALE: NONE