MIAMI-DADE COUNTY
BUILDING CODE COMPLIANCE OFFICE (BCCO)
PRODUCT CONTROL DIVISION

MIAMI-DADE COUNTY, FLORIDA
METRO-DADE FLAGLER BUILDING
140 WEST FLAGLER STREET, SUITE 1603
MIAMI, FLORIDA 33130-1563
(305) 375-2901 FAX (305) 372-6339
www.maimidade.gov/buildingcode

NOTICE OF ACCEPTANCE (NOA)

Marvin Windows & Doors
P.O. Box 100
Highway 11 West
Warroad, MN, FL 56763

SCOPE:

This NOA is being issued under the applicable rules and regulations governing the use of construction materials. The documentation submitted has been reviewed by Miami-Dade County Product Control Division and accepted by the Board of Rules and Appeals (BORA) to be used in Miami Dade County and other areas where allowed by the Authority Having Jurisdiction (AHJ).

This NOA shall not be valid after the expiration date stated below. The Miami-Dade County Product Control Division (In Miami Dade County) and/or the AHJ (in areas other than Miami Dade County) reserve the right to have this product or material tested for quality assurance purposes. If this product or material fails to perform in the accepted manner, the manufacturer will incur the expense of such testing and the AHJ may immediately revoke, modify, or suspend the use of such product or material within their jurisdiction. BORA reserves the right to revoke this acceptance, if it is determined by Miami-Dade County Product Control Division that this product or material fails to meet the requirements of the applicable building code.

This product is approved as described herein, and has been designed to comply with the Florida Building Code, including the High Velocity Hurricane Zone.

DESCRIPTION: Series "Storm Plus IZ 4 Casemaster" Aluminum Clad Wood Fixed Window – L.M.I.

APPROVAL DOCUMENT: Drawing No. **1536**, titled "Clad Casemaster Picture Stormplus IZ4", sheets 1 through 10 of 10, dated 04/02/08, prepared by W. W. Schaefer Engineering & Consulting, P.A., signed and sealed by Warren W. Schaefer, P.E., bearing the Miami-Dade County Product Control Approval stamp with the Notice of Acceptance number and approval date by the Miami-Dade County Product Control Division.

MISSILE IMPACT RATING: Large and Small Missile Impact Resistant

LABELING: Each unit shall bear a permanent label with the manufacturer's name or logo, city, state and following statement: "Miami-Dade County Product Control Approved", unless otherwise noted herein.

RENEWAL of this NOA shall be considered after a renewal application has been filed and there has been no change in the applicable building code negatively affecting the performance of this product.

TERMINATION of this NOA will occur after the expiration date or if there has been a revision or change in the materials, use, and/or manufacture of the product or process. Misuse of this NOA as an endorsement of any product, for sales, advertising or any other purposes shall automatically terminate this NOA. Failure to comply with any section of this NOA shall be cause for termination and removal of NOA.

ADVERTISEMENT: The NOA number preceded by the words Miami-Dade County, Florida, and followed by the expiration date may be displayed in advertising literature. If any portion of the NOA is displayed, then it shall be done in its entirety.

INSPECTION: A copy of this entire NOA shall be provided to the user by the manufacturer or its distributors and shall be available for inspection at the job site at the request of the Building Official.

This NOA consists of this page 1 and evidence page E-1 and E-2, as well as approval document mentioned above.

The submitted documentation was reviewed by **Manuel Perez, P.E.**

MIAMI-DADE COUNTY APPROVED

NOA No. 08-0213.08
Expiration Date: July 03, 2013
Approval Date: July 03, 2008

Marvin Windows & Doors

NOTICE OF ACCEPTANCE: EVIDENCE SUBMITTED

A. DRAWINGS

1. Manufacturer's die drawings and sections.
2. Drawing No **1536**, Sheets 1 through 10 of 10, titled "Clad Casemaster Picture Stormplus IZ4, dated 04/02/08, prepared by W. W. Schaefer Engineering & Consulting, P.A., signed and sealed by Warren W. Schaefer, P.E.

B. TESTS

1. Test reports on: 1) Air Infiltration Test, per FBC, TAS 202-94
   2) Uniform Static Air Pressure Test, Loading per FBC TAS 202-94
   3) Water Resistance Test, per FBC, TAS 202-94
   4) Large Missile Impact Test per FBC, TAS 201-94
   5) Cyclic Wind Pressure Loading per FBC, TAS 203-94

   Along with marked-up drawings and installation diagram of ***Storm Plus IZ4*** *Casemaster* aluminum clad wood fixed window, Units 3, 8, 9, 11 & 12, prepared by Architectural Testing, Inc., **ATI-77780.01-201-18**, dated 01/28/08, signed and sealed by Joseph A. Reed, P.E.

C. CALCULATIONS

1. Anchor verification calculations and structural analysis, complying with FBC-2004, dated 02/07/08, prepared by W. W. Schaefer Engineering & Consulting, P.A., signed and sealed by Warren W. Schaefer, P.E.
   Complies with ASTM E1300-02

D. QUALITY ASSURANCE

1. Miami Dade Building Code Compliance Office (BCCO).

E. MATERIAL CERTIFICATIONS

1. Notice of Acceptance No. **07-1116.04** issued to E.I. DuPont DeNemours & Co., Inc. for their "**DuPont SentryGlas ® Plus**" dated 01/03/08, expiring on 01/14/12.

F. STATEMENTS

1. Statement letter of conformance, dated November 20, 2007, signed and sealed by Warren W. Schaefer, P.E.
2. Statement letter of no financial interest, dated November 20, 2007, signed and sealed by Warren W. Schaefer, P.E.
3. Laboratory compliance letter for Test Report No. **ATI-77780.01-201-18**, issued by Architectural Testing, Inc., dated January 28, 2008, signed and sealed by Joseph A. Reed, P.E.

Manuel Perez, P.E.
Product Control Examiner
NOA No. 08-0213.08
Expiration Date: July 03, 2013
Approval Date: July 03, 2008

NOTICE OF ACCEPTANCE: EVIDENCE SUBMITTED

F. STATEMENTS (CONTINUED)

4. Testing proposal # **07-3071**, dated 06/21/07, revised on 07/02/07 issued by BCCO, signed by Manuel Perez, P.E.

5. Laboratory compliance letter for Test Report No. **ATI-77780.01-201-18**, issued by Architectural Testing, Inc., dated January 28, 2008, signed and sealed by Joseph A. Reed, P.E.

G. OTHERS

1. None.

Manuel Perez, P.E.
Product Control Examiner
NOA No. 08-0213.08
Expiration Date: July 03, 2013
Approval Date: July 03, 2008

GENERAL NOTES:

1. THESE WINDOW SYSTEMS HAVE BEEN TESTED, ANALYZED & APPROVED FOR DESIGN PRESSURES NOT TO EXCEED THOSE SHOWN IN THE "ALLOWABLE DESIGN PRESSURE TABLE(S).
2. OPENINGS, BUCKING & BUCKING FASTENERS MUST BE PROPERLY DESIGNED & INSTALLED TO TRANSFER WIND LOADS TO THE STRUCTURE.
3. ALL HARDWARE & FASTENERS SHALL BE IN ACCORDANCE WITH THESE DRAWINGS & SHALL NOT VARY UNLESS SPECIFICALLY MENTIONED ON THE DRAWINGS. SPECIFIED ANCHOR EMBED TO BASE MATERIAL SHALL BE BEYOND WALL FINISH OR STUCCO.
4. THE DETAILS & SPECIFICATIONS SHOWN HEREIN REPRESENT THE PRODUCTS TESTED & PROPOSED FOR WATER, AIR, IMPACT, CYCLIC & UNIFORM STATIC AIR PRESSURE TESTING IN CONFORMANCE WITH THE FLORIDA BUILDING CODE PROTOCALS TAS-201, 202 & 203 FOR LARGE MISSILE IMPACT WINDOWS.
5. THESE WINDOW SYSTEMS HAVE BEEN DESIGNED IN ACCORDANCE WITH AND MEET THE REQUIREMENTS OF THE FLORIDA BUILDING CODE (FBC) INCLUDING HIGH VELOCITY HURRICANE ZONES (HVHZ).
6. IMPACT SHUTTERS ARE NOT REQUIRED WITH THESE WINDOWS.
7. ALL ANCHORS SECURING WINDOW FRAME TO PRESSURE TREATED BUCKS OR WOOD FRAMING SHALL BE CAPABLE OF RESISTING CORROSION CAUSED BY THE PRESSURE TREATING CHEMICALS IN THE WOOD.
8. DETERMINE THE POSITIVE & NEGATIVE DESIGN LOADS TO USE WHEN REFERENCING THESE DOCUMENTS IN ACCORDANCE WITH THE GOVERNING CODE AND GOVERNING WIND VELOCITY. FOR WIND LOAD CALCULATIONS IN ACCORDANCE WITH THE FLORIDA BUILDING CODE, A DIRECTIONALITY FACTOR OF Kd = 0.85 MAY BE APPLIED WHEN USED IN CONJUNCTION WITH LOAD COMBINATIONS SPECIFIED IN SECTION 2.0 OF THE ASCE 7 STANDARD.
9. NO INCREASE IN ALLOWABLE STRESS HAS BEEN USED IN THE CERTIFICATION OF THIS PRODUCT. WIND LOAD DURATION FACTOR Cd = 1.6 WAS USED FOR WOOD SCREW ANALYSIS ONLY.
10. MATERIALS, INCLUDING BUT NOT LIMITED TO STEEL SCREWS, THAT COME INTO CONTACT WITH OTHER DISSIMILAR MATERIALS SHALL MEET THE REQUIREMENTS OF FLORIDA BUILDING CODE CHAPTER 20.

CORNER CONSTRUCTION (STANDARD RECTANGULAR WINDOWS)

FRAME CORNERS: THE SIDE WOOD MEMBERS ARE BUTTED TO THE HEAD & SILL MEMBERS, SECURED WITH THREE(3) GS16 1/2 X 1 1/2" STAPLES THROUGH THE HEAD & SILL INTO THE JAMB & ONE(1) 14 GA. 1/2 X 2" STAPLE THROUGH THE JAMB INTO THE HEAD & SILL & SEALED WITH SEALANT.
FRAME CLADDING CORNERS: CLADDING IS MITERED TOGETHER & JOINED WITH A CORNER KEY PART NO. 37A.
SASH CORNERS: SASH MEMBERS ARE MORTISED & TENONED AND SECURED WITH ONE(1) GS16 X 1 1/8" STAPLE.
SASH CALADDING CORNERS: CLADDING IS MITERED TOGETHER & JOINED WITH A CORNER KEY PART NO. 37B.

CORNER CONSTRUCTION (SHAPED WINDOWS)

FRAME CORNERS: THE SIDE WOOD MEMBERS ARE BUTTED TO THE HEAD & SILL MEMBERS & SECURED WITH NO. 7 X 2" SCREWS (3 AT SQUARE CORNERS; 4 AT SHAPED CORNERS) AND SEALED WITH SEALANT.
FRAME CLADDING CORNERS: CLADDING IS MITERED TOGETHER & JOINED WITH A CORNER KEY PART NO. 37C WHICH IS SCREWED CLAD TO KEY WITH 4 NO. 7 X 1/2" SCREWS (2 PER KEY LEG).
SASH CORNERS: SASH MEMBERS ARE BUTTED TOGETHER, JOINED WITH 2 NO. 7 X 2" TRIM HEAD SCREWS & SEALED WITH SEALANT.
SASH CALADDING CORNERS: MITER CUT, BUTTED TOGETHER AND SEALED WITH SEALANT

CORNER CONSTRUCTION (WIDE SASH WINDOWS)

FRAME CORNERS: THE SIDE WOOD MEMBERS ARE BUTTED TO THE HEAD & SILL MEMBERS & SECURED WITH NO. 7 X 2" SCREWS (3 AT SQUARE CORNERS; 4 AT SHAPED CORNERS) AND SEALED WITH SEALANT.
FRAME CLADDING CORNERS: CLADDING IS MITERED TOGETHER & JOINED WITH A CORNER KEY PART NO. 37C WHICH IS SCREWED CLAD TO KEY WITH 4 NO. 7 X 1/2" SCREWS (2 PER KEY LEG).
SASH CORNERS: SASH MEMBERS ARE BUTTED TOGETHER, JOINED WITH ONE NO. 10 X 6" SCREW.
SASH CLADDING CORNERS: SQUARE CUT,BUTTED TOGETHER AND SEALED WITH SEALANT

FRAME ANCHOR REQUIREMENTS TABLE

OPENING TYPE (SUBSTRATE)	FRAME/CLIP TO OPENING FASTENER TYPE	MINIMUM EMBED	MINIMUM EDGE DIST.
FRAME SHEAR SCREWS			
MIN. 2X4 WOOD FRAME OR BUCK (MIN. GR. 3 & G=0.55)	NO. 10 SMS OR WOOD SCREW	1 1/4"	3/4"
MIN. 18 GA. 33 KSI METAL STUD	NO. 10 GR. 5 SELF TAP/DRILLING SCREW	FULL	1/2"
MIN. 1/8" THK A36 STEEL	NO. 10 GR. 5 SELF TAP/DRILLING SCREW	FULL	1/2"
MIN. 1/8" THK 6063-T5 ALUM.	NO. 10 GR. 5 SELF TAP/DRILLING SCREW	FULL	1/2"
C-90 CMU/2500 PSI CONCRETE	(1) 1/4" CONCRETE SCREW	1 1/4"	2"
INSTALLATION CLIP SCREWS			
MIN. 2X4 WOOD FRAME OR BUCK (MIN. GR. 3 & G=0.55)	NO. 8 X 1 1/2" SMS	1 3/8"	1/2"
MIN. 1/8" THK A36 STEEL	NO. 8 GR. 5 SELF TAP/DRILLING SCREW	FULL	1/2"
MIN. 1/8" THK 6063-T5 ALUM.	NO. 8 GR. 5 SELF TAP/DRILLING SCREW	FULL	1/2"

(1) CONCRETE SCREWS SHALL BE ELCO OR ITW RAMSET/RED HEAD TAPCONS, HILTI KWIK-CON II OR POWERS RAWL TAPPER (HARDENED STEEL OR S.S.).

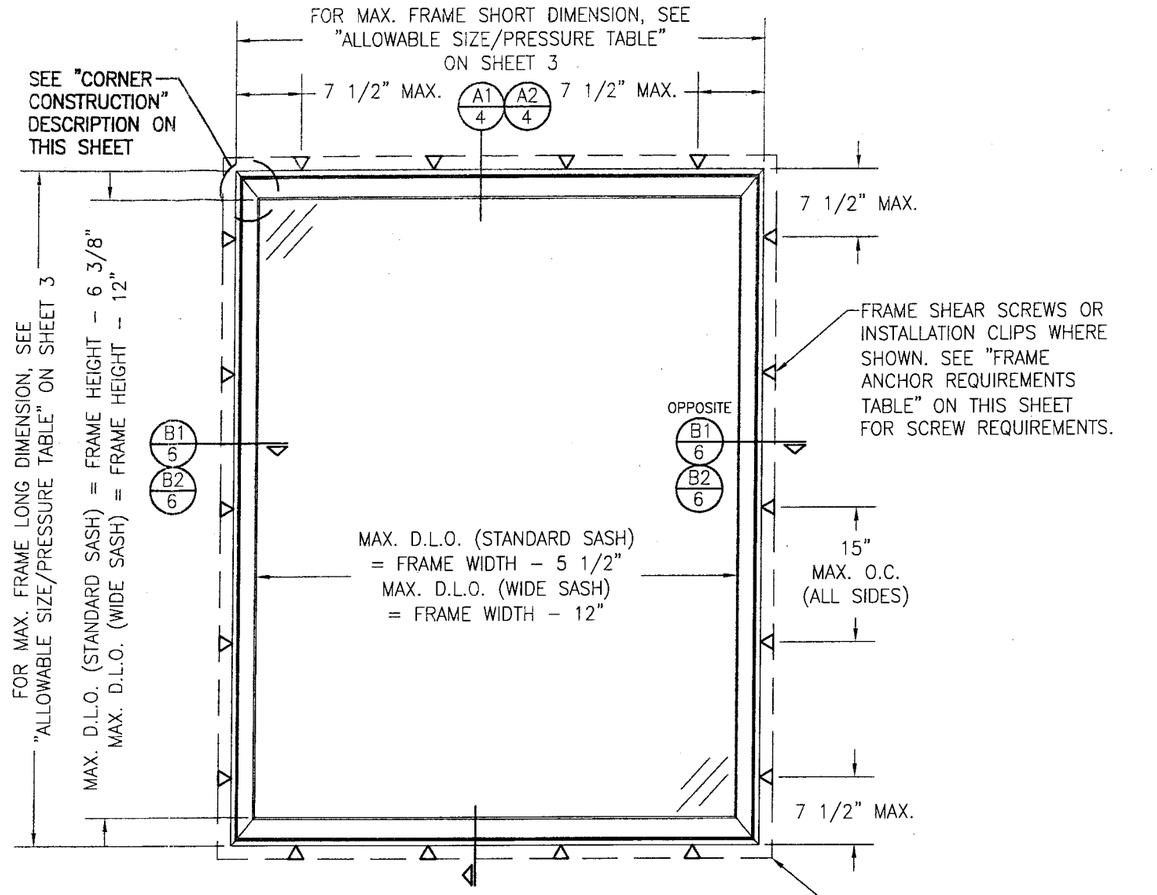

EXTERIOR ELEVATION
SINGLE RECTANGULAR FIXED CASEMENT WINDOW
(STANDARD SASH CONDITION SHOWN, WIDE SASH CONDITION ALSO APPLIES)
SCALE: 3/4" = 1'-0"

ALLOWABLE DESIGN PRESSURE (SINGLE STANDARD SASH & SINGLE WIDE SASH WINDOWS)
SEE LOAD TABLE ON SHEET 3

Approved as complying with the Florida Building Code
Date 07/03/08
NOA# 08-0213.08
Miami Dade Product Control Division
By Manuel Perez

NO.	REVISION DESCRIPTION	BY	DATE

DRAWN BY: W.R.M. | CHECKED BY: W.W.S.
PLOT: 1=16 | DATE: 04/02/08

DRAWING TITLE: CLAD CASEMASTER PICTURE STORMPLUS IZ4

MANUFACTURER: MARVIN WINDOWS & DOORS
HIGHWAY 11; P.O. BOX 100
WARROAD, MN 56763
800-346-5044

CONSULTANTS: W. W. SCHAEFER ENGINEERING & CONSULTING, P.A.
8895 N. MILITARY TRAIL; SUITE C-204
PALM BEACH GARDENS, FL 33410
PHONE: 561-775-4902 FAX: 561-775-4903

CERTIFICATION: APR 02 2008
WARREN W. SCHAEFER, P.E.
P.E. NO. 44135

DRAWING NO. 1536 | REV.
SHEET NO. 1 OF 10

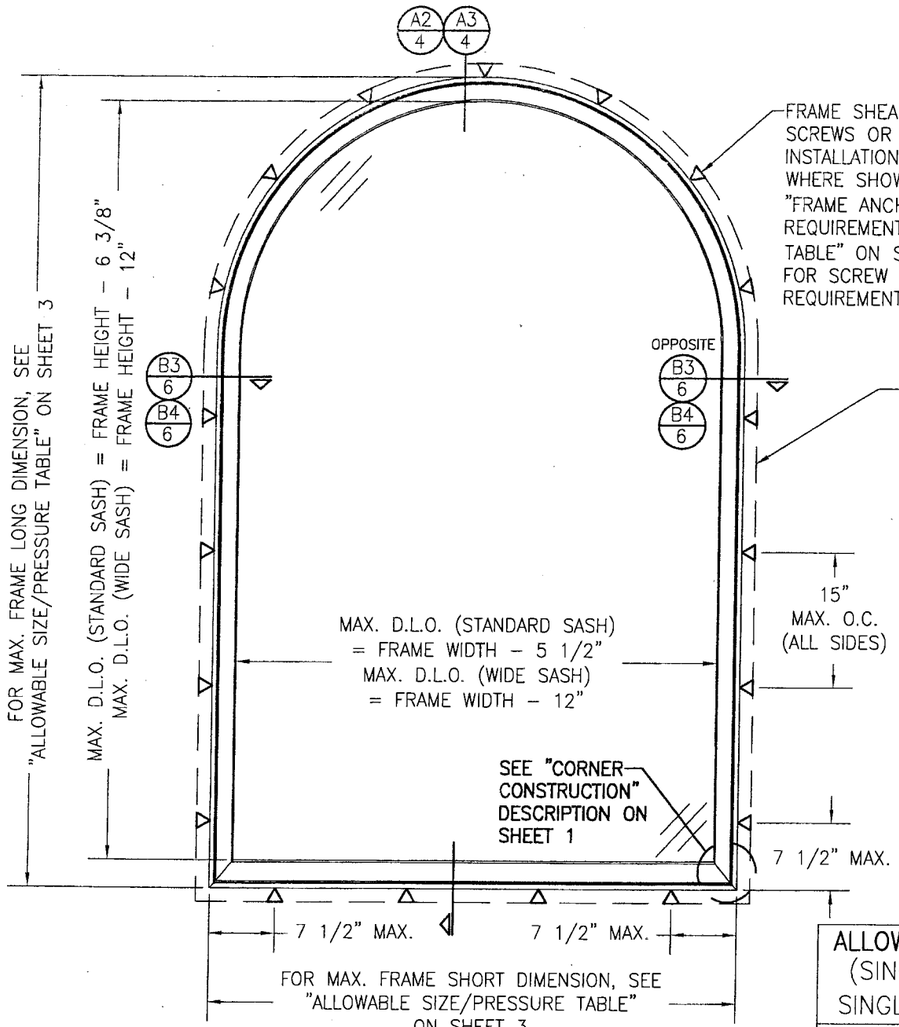

EXTERIOR ELEVATION
SINGLE EXTENDED LEG HALF ROUND TOP FIXED CASEMENT WINDOW
(STANDARD SASH CONDITION SHOWN, WIDE SASH CONDITION ALSO APPLIES)
SCALE: 3/4" = 1'-0"

ALLOWABLE DESIGN PRESSURE
(SINGLE STANDARD SASH & SINGLE WIDE SASH WINDOWS)
SEE LOAD TABLE ON SHEET 3

APPROVED SHAPES

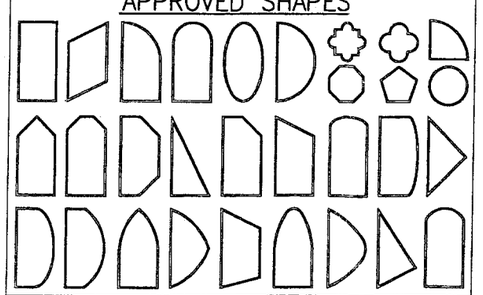

NOTES:
1. OTHER SHAPES MAY APPLY PROVIDING THEY ARE SIMILAR TO THOSE SHOWN & HAVE CORNER CONSTRUCTION AS DESCRIBED ON THIS SHEET.
2. ALL SHAPED UNITS MUST FIT INSCRIBED INTO THE ALLOWABLE RECTANGULAR UNITS & BE GOVERNED BY THE ALLOWABLE PRESSURE OF THE RESPECTIVE RECTANGULAR UNIT.

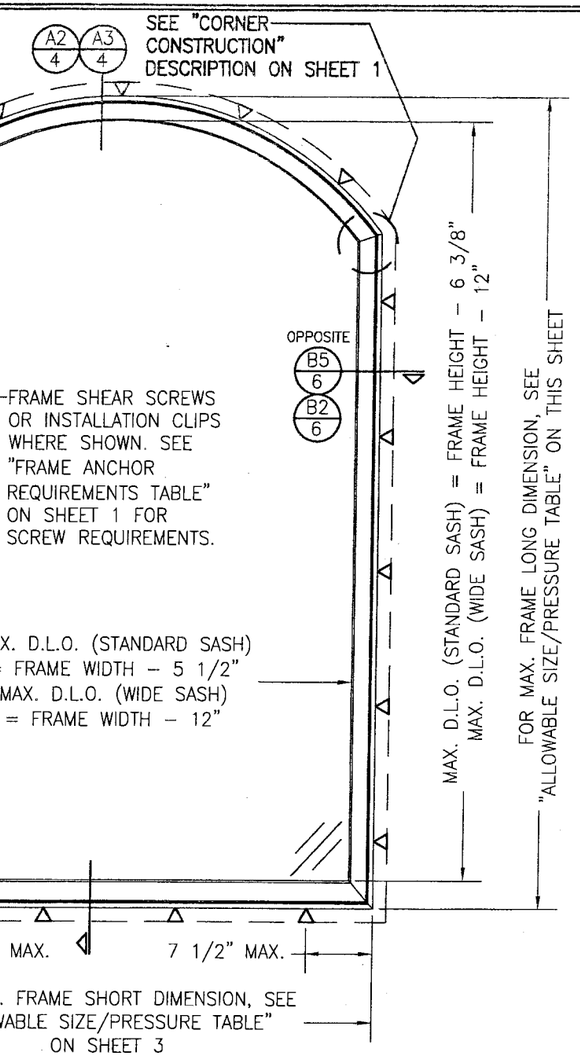

EXTERIOR ELEVATION
SINGLE EYEBROW TOP FIXED CASEMENT WINDOW
(STANDARD SASH CONDITION SHOWN, WIDE SASH CONDITION ALSO APPLIES)
SCALE: 3/4" = 1'-0"

Approved as complying with the Florida Building Code
Date 07/03/08
NOAA# 08-0213.08
Miami Dade Product Control Division
By Manuel Perez

DRAWN BY: W.R.M.	CHECKED BY: W.W.S.
PLOT: 1=16	DATE: 04/02/08

NO.	REVISION DESCRIPTION	BY	DATE

DRAWING TITLE
CLAD CASEMASTER PICTURE STORMPLUS IZ4

MANUFACTURER
MARVIN WINDOWS & DOORS
HIGHWAY 11; P.O. BOX 100
WARROAD, MN 56763
800-346-5044

CONSULTANTS
W. W. SCHAEFER ENGINEERING & CONSULTING, P.A.
8895 N. MILITARY TRAIL; SUITE C-204
PALM BEACH GARDENS, FL 33410
PHONE: 561-775-4902 FAX: 561-775-4903

CERTIFICATION
APR 02 2008
WARREN W. SCHAEFER, P.E.
P.E. NO. 44135

DRAWING NO. 1536
REV.
SHEET NO. 2 OF 10

ALLOWABLE WINDOW SIZE/PRESSURE TABLE (SINGLE STANDARD SASH WINDOW)

MAX. WINDOW FRAME LONG DIMENSION (IN.)	MAX. WINDOW FRAME SHORT DIMENSION (IN.)	ALLOWABLE PRESSURE (PSF) GLASS OPTION "A" POS.	GLASS OPTION "A" NEG.	GLASS OPTIONS "B" POS.	GLASS OPTIONS "B" NEG.	GLASS OPTIONS "C" POS.	GLASS OPTIONS "C" NEG.
144	50	59.1	59.1	75.0	75.0	X	X
	48	63.1	63.1	75.0	75.0	X	X
	42	75.0	75.0	75.0	75.0	X	X
	36	75.0	80.0	75.0	80.0	X	X
	24	95.0	95.0	95.0	95.0	75.0	85.0
132	54	56.0	56.0	75.0	75.0	X	X
	48	65.7	65.7	75.0	75.0	X	X
	42	75.0	75.0	75.0	75.0	X	X
	39	75.0	80.0	75.0	80.0	X	X
	26	95.0	95.0	95.0	95.0	75.0	85.0
120	60	53.1	53.1	75.0	75.0	X	X
	54	59.7	59.7	75.0	75.0	X	X
	48	69.6	69.6	75.0	75.0	X	X
	43	75.0	80.0	75.0	80.0	X	X
	28	95.0	95.0	95.0	95.0	75.0	85.0
108	66	55.2	55.2	73.6	73.6	X	X
	60	59.8	59.8	75.0	75.0	X	X
	54	66.4	66.4	75.0	75.0	X	X
	48	75.0	75.7	75.0	75.0	X	X
	45	75.0	80.0	75.0	80.0	X	X
	36	95.0	95.0	95.0	95.0	75.0	85.0
96	72	58.6	58.6	75.0	75.0	X	X
	66	62.5	62.5	75.0	75.0	X	X
	60	67.7	67.7	75.0	75.0	X	X
	54	74.1	74.1	75.0	75.0	X	X
	49	75.0	80.0	75.0	80.0	X	X
	36	95.0	95.0	95.0	95.0	75.0	85.0

MAX. WINDOW FRAME LONG DIMENSION (IN.)	MAX. WINDOW FRAME SHORT DIMENSION (IN.)	ALLOWABLE PRESSURE (PSF) GLASS OPTION "A" POS.	GLASS OPTION "A" NEG.	GLASS OPTIONS "B" POS.	GLASS OPTIONS "B" NEG.	GLASS OPTIONS "C" POS.	GLASS OPTIONS "C" NEG.
90	72	62.2	62.2	75.0	75.0	X	X
	66	66.8	66.8	75.0	75.0	X	X
	60	72.1	72.1	75.0	75.0	X	X
	54	75.0	78.1	75.0	75.0	X	X
	52	75.0	80.0	75.0	80.0	X	X
	38	95.0	95.0	95.0	95.0	75.0	85.0
84	72	67.5	67.5	75.0	75.0	X	X
	66	71.9	71.9	75.0	75.0	X	X
	60	75.0	76.9	75.0	75.0	X	X
	56	75.0	80.0	75.0	80.0	X	X
	41	95.0	95.0	95.0	95.0	75.0	85.0
78	72	72.7	72.7	75.0	75.0	X	X
	66	75.0	76.7	75.0	75.0	X	X
	61	75.0	80.0	75.0	80.0	X	X
	44	95.0	95.0	95.0	95.0	75.0	85.0
72	72	75.0	78.2	75.0	75.0	X	X
	68	75.0	80.0	75.0	80.0	X	X
	48	95.0	95.0	95.0	95.0	75.0	85.0
66	66	75.0	80.0	75.0	80.0	X	X
	52	95.0	95.0	95.0	95.0	75.0	85.0
60	60	75.0	80.0	75.0	80.0	X	X
	57	95.0	95.0	95.0	95.0	75.0	85.0

1. WINDOW SIZE DIMENSIONS SHOWN ARE MAXIMUM SIZES. SMALLER SIZES SHALL APPLY TO LOADS EQUAL TO THE NEAREST LARGER SIZE SHOWN IN TABLE.
2. CROSSED OUT BOXES DESIGNATE SIZES NOT ACCEPTABLE FOR THE RESPECTIVE OPTIONS.

SEE SHEET 8 FOR GLASS OPTIONS

ALLOWABLE WINDOW SIZE/PRESSURE TABLE (SINGLE WIDE SASH WINDOW)

MAX. WINDOW FRAME LONG DIMENSION (IN.)	MAX. WINDOW FRAME SHORT DIMENSION (IN.)	ALLOWABLE PRESSURE (PSF) GLASS OPTION "A" POS.	GLASS OPTION "A" NEG.	GLASS OPTIONS "B" POS.	GLASS OPTIONS "B" NEG.	GLASS OPTIONS "C" POS.	GLASS OPTIONS "C" NEG.
144	36	75.0	80.0	75.0	80.0	X	X
	24	95.0	95.0	95.0	95.0	95.0	95.0
132	39	75.0	80.0	75.0	80.0	X	X
	26	95.0	95.0	95.0	95.0	95.0	95.0
120	43	75.0	80.0	75.0	80.0	X	X
	28	95.0	95.0	95.0	95.0	95.0	95.0
108	48	75.0	80.0	75.0	80.0	X	X
	32	95.0	95.0	95.0	95.0	95.0	95.0
96	54	75.0	80.0	75.0	80.0	X	X
	36	95.0	95.0	95.0	95.0	95.0	95.0
90	58	75.0	80.0	75.0	80.0	X	X
	38	95.0	95.0	95.0	95.0	95.0	95.0
84	62	75.0	80.0	75.0	80.0	X	X
	41	95.0	95.0	95.0	95.0	95.0	95.0
78	67	75.0	80.0	75.0	80.0	X	X
	44	95.0	95.0	95.0	95.0	95.0	95.0
72.625	72	75.0	80.0	75.0	80.0	X	X
	48	95.0	95.0	95.0	95.0	95.0	95.0
66	66	75.0	80.0	75.0	80.0	X	X
	52	95.0	95.0	95.0	95.0	95.0	95.0
60	60	75.0	80.0	75.0	80.0	X	X
	57	95.0	95.0	95.0	95.0	95.0	95.0

1. WINDOW SIZE DIMENSIONS SHOWN ARE MAXIMUM SIZES. SMALLER SIZES SHALL APPLY TO LOADS EQUAL TO THE NEAREST LARGER SIZE SHOWN IN TABLE.
2. CROSSED OUT BOXES DESIGNATE SIZES NOT ACCEPTABLE FOR THE RESPECTIVE OPTIONS.

SEE SHEET 8 FOR GLASS OPTIONS

Approved as complying with the Florida Building Code
Date 07/03/08
NOA# 08-0213.08
Miami Dade Product Control Division
By Marcel Perez

DRAWN BY: W.R.M.	CHECKED BY: W.W.S.
PLOT: 1=16	DATE: 04/02/08

NO.	REVISION DESCRIPTION	BY	DATE

DRAWING TITLE
CLAD CASEMASTER PICTURE STORMPLUS IZ4

MANUFACTURER
MARVIN WINDOWS & DOORS
HIGHWAY 11; P.O. BOX 100
WARROAD, MN 56763
800-346-5044

CONSULTANTS
W. W. SCHAEFER ENGINEERING & CONSULTING, P.A.
8895 N. MILITARY TRAIL SUITE C-204
PALM BEACH GARDENS, FL 33410
PHONE: 561-775-4902 FAX: 561-775-4903

CERTIFICATION
APR 02 2008
WARREN W. SCHAEFER, P.E.
P.E. NO. 44135

DRAWING NO. 1536
REV.
SHEET NO. 3 OF 10

MULLION ALLOWABLE LOAD TABLE

MAXIMUM MULLION SPAN (IN.)	MAXIMUM LOAD WIDTH (IN.)	ALLOWABLE PRESSURE (POS. & NEG. PSF)		
		NON-REINFORCED MULLION	REINFORCED MULLION	
			4 ANCHORS	6 ANCHORS
96	72		47.9	57.2
	66		49.8	59.4
	60		52.2	62.4
	54		55.5	66.3
	48		59.9	71.5
	42		65.7	78.4
	36		73.7	88.0
	30		85.1	95.0
	24		95.0	95.0
90	72		53.2	63.6
	66		55.0	65.7
	60		57.5	68.6
	54		60.8	72.6
	48		65.3	78.0
	42		71.4	85.3
	36		79.8	95.0
	30		91.9	95.0
	24		95.0	95.0
84	72		59.9	71.5
	66		61.5	73.4
	60		63.9	76.3
	54		67.2	80.3
	48		71.8	85.8
	42		78.2	93.4
	36		87.1	95.0
	30		95.0	95.0
78	72		68.4	81.7
	66		69.7	83.2
	60		71.8	85.8
	54		75.1	89.7
	48		79.8	95.0
	42		86.4	95.0
	36		95.0	95.0
72	72 OR MORE		79.8	95.0
	66		80.4	95.0
	60		82.1	95.0
	54		85.1	95.0
	48		89.8	95.0
	42		95.0	95.0
71 1/8	71 OR MORE	67.4	82.1	95.0
	66	68.2	82.5	95.0
	60	70.0	84.1	95.0
	54	72.5	87.1	95.0
	48	76.3	91.7	95.0
	42	82.0	95.0	95.0
	36	90.3	95.0	95.0
	30	95.0	95.0	95.0
66	66 OR MORE	79.1	95.0	95.0
	60	79.7	95.0	95.0
	54	81.8	95.0	95.0
	48	85.4	95.0	95.0
	42	91.1	95.0	95.0
	36	95.0	95.0	95.0
60	60 OR MORE	95.0	95.0	95.0

TABLE NOTES:
1. LESSER OF THE PRESSURE SHOWN IN THIS TABLE & THAT ALLOWED FOR THE INDIVIDUAL WINDOW SHALL CONTROL AS ALLOWABLE FOR THE OVERALL UNIT.
2. ADD 3/8" TO LOAD WIDTH VALUES IN THIS TABLE WHEN 3/8" ALUMINUM REINFORCEMENT PLATE IS USED.
3. CROSSED OUT BOXES DESIGNATE SIZES NOT ACCEPTABLE FOR THE RESPECTIVE OPTIONS.

FOR NON-REINFORCED MULLION CONDITIONS, SEE SECTIONS C1/7 & C3/7. FOR REINFORCED MULLION CONDITIONS, SEE SECTIONS C2/7 & C4/7.

EXAMPLES OF SIDE-BY-SIDE SHAPED MULLED CONDITIONS

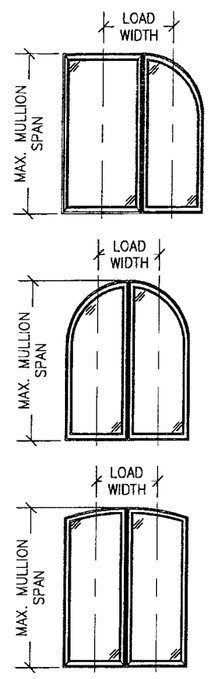

1. WINDOW SHAPES OTHER THAN THOSE SHOWN MAY APPLY PROVIDING THEY ARE APPLICABLE TO THOSE SHOWN ON SHEET 2.
2. SHAPED WINDOWS MAY ALSO BE MULLED TO RECTANGULAR WINDOWS AS TRANSOMS UNDER THE SAME RESTRICTIONS AS SIDE BY SIDE CONDITION SHOWN IN ELEVATION.

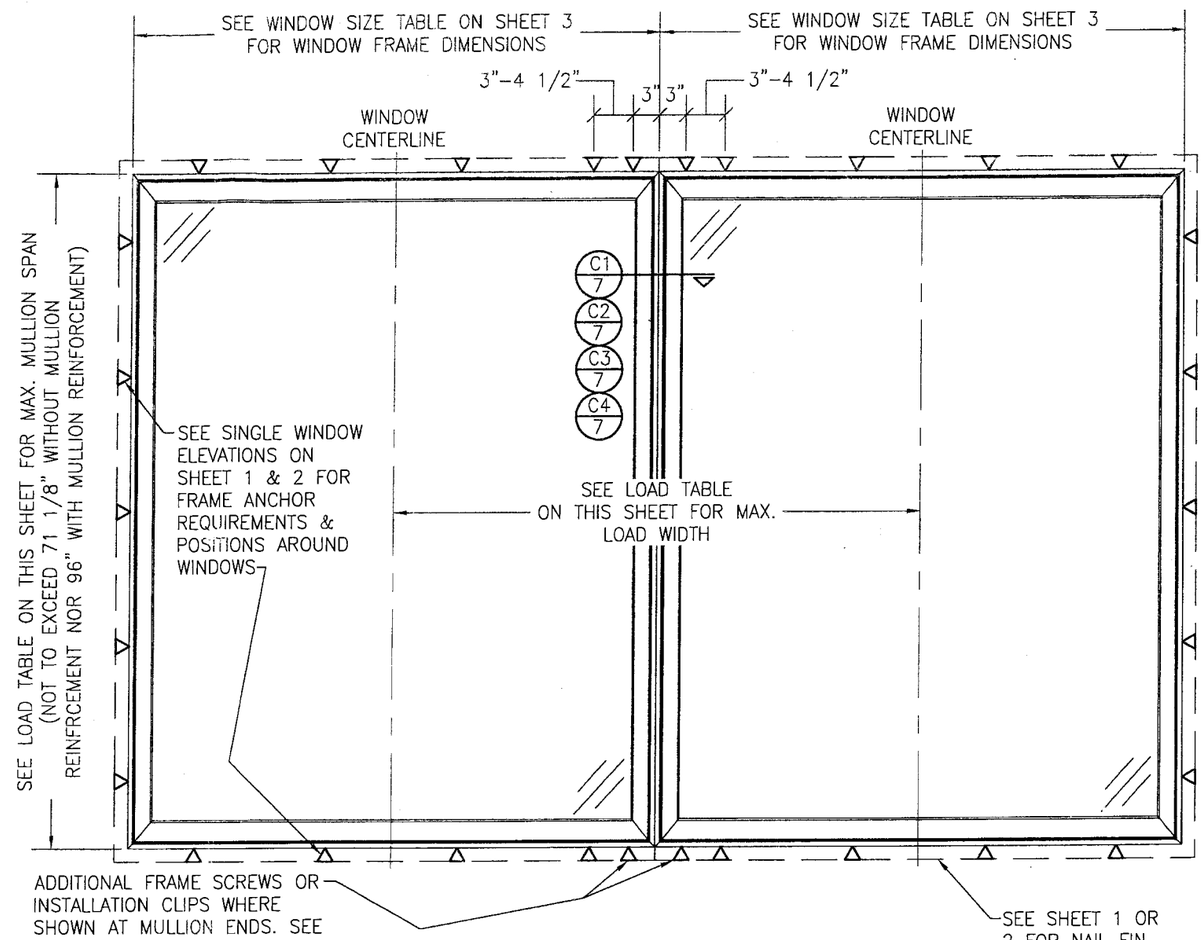

EXTERIOR ELEVATION
MULTIPLE CASEMENT/FIXED WINDOW

SCALE: 3/4" = 1'-0"

(RECTANGULAR WINDOW SHOWN, SHAPED WINOWS ALSO APPLY. SEE "APPROVED SHAPED MULLED CONDITIONS" TABLE ON THIS SHEET)

(STANDARD SASH CONDITION SHOWN, WIDE SASH CONDITION ALSO APPLIES)

MULTIPLE UNIT NOTES:
1. FOR ALL DETAIL NOT SHOWN, SEE SINGLE WINDOW ELEVATIONS.
2. MULLION MAY BE HORIZONTAL OR VERTICAL PROVIDING WINDOW SIZES ARE RESTRICTED AS SHOWN IN THIS ELEVATION.
3. IF VERTICALLY STACKED, THE MANUFACTURER SHALL INSURE THAT THE DEAD LOAD WEIGHT OF THE WINDOWS CAN NOT CAUSE UNDUE FAILURE.
4. THERE IS NO LIMIT ON THE NUMBER OF WINDOWS THAT MAY BE COMBINED IN ONE DIRECTION INTO ONE OPENING PROVIDING THE OPENING IS DESIGNED TO SUPPORT ALL LOADS TRANSFERED FROM THE WINDOWS & THEIR MULLIONS.
5. INDIVIDUAL WINDOW SIZES SHALL BE AS SPECIFIED IN THE SINGLE WINDOW ELEVATION.

Approved as complying with the Florida Building Code
Date 07/03/08
NOA# 08-0213.08
Miami Dade Product Control Division
By Manuel Perez

NO.	REVISION DESCRIPTION	BY	DATE

DRAWN BY: W.R.M. | CHECKED BY: W.W.S.
PLOT: 1=16 | DATE: 04/02/08

DRAWING TITLE: CLAD CASEMASTER PICTURE STORMPLUS IZ4

MANUFACTURER: MARVIN WINDOWS & DOORS
HIGHWAY 11; P.O. BOX 100
WARROAD, MN 56763
800-346-5044

CONSULTANTS: W. W. SCHAEFER ENGINEERING & CONSULTING, P.A.
8895 N. MILITARY TRAIL; SUITE C-204
PALM BEACH GARDENS, FL 33410
PHONE: 561-775-4902 FAX: 561-775-4903

CERTIFICATION: APR 02 2008
WARREN W. SCHAEFER, P.E.
P.E. NO. 44135

DRAWING NO. 1536 | REV.
SHEET NO. 4 OF 10

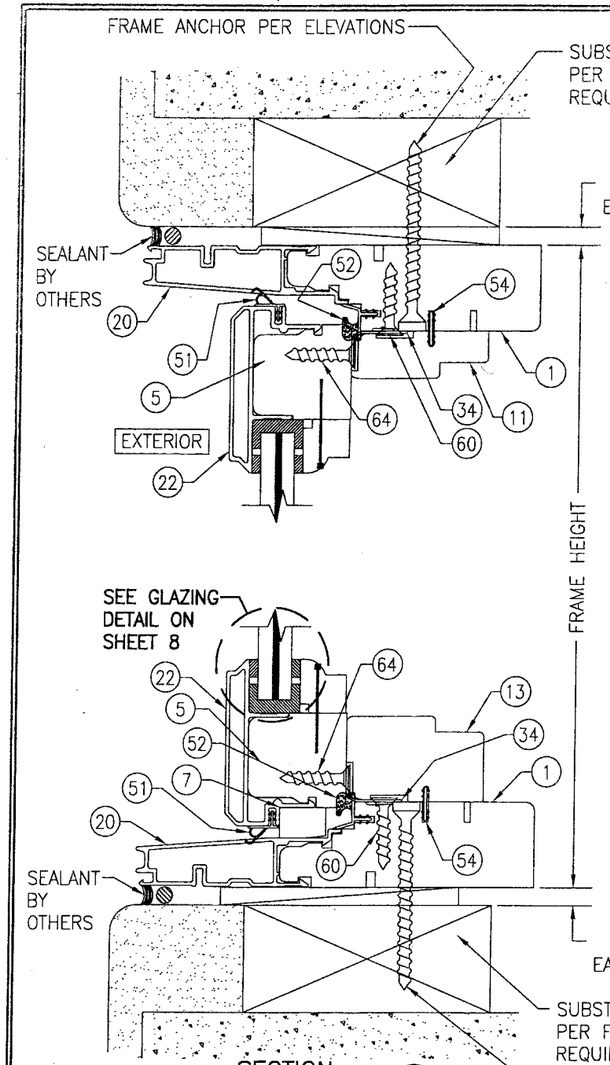

SECTION A1/5
SCALE: 1/2 FULL
(RECTANGULAR STANDARD SASH CONDITION)

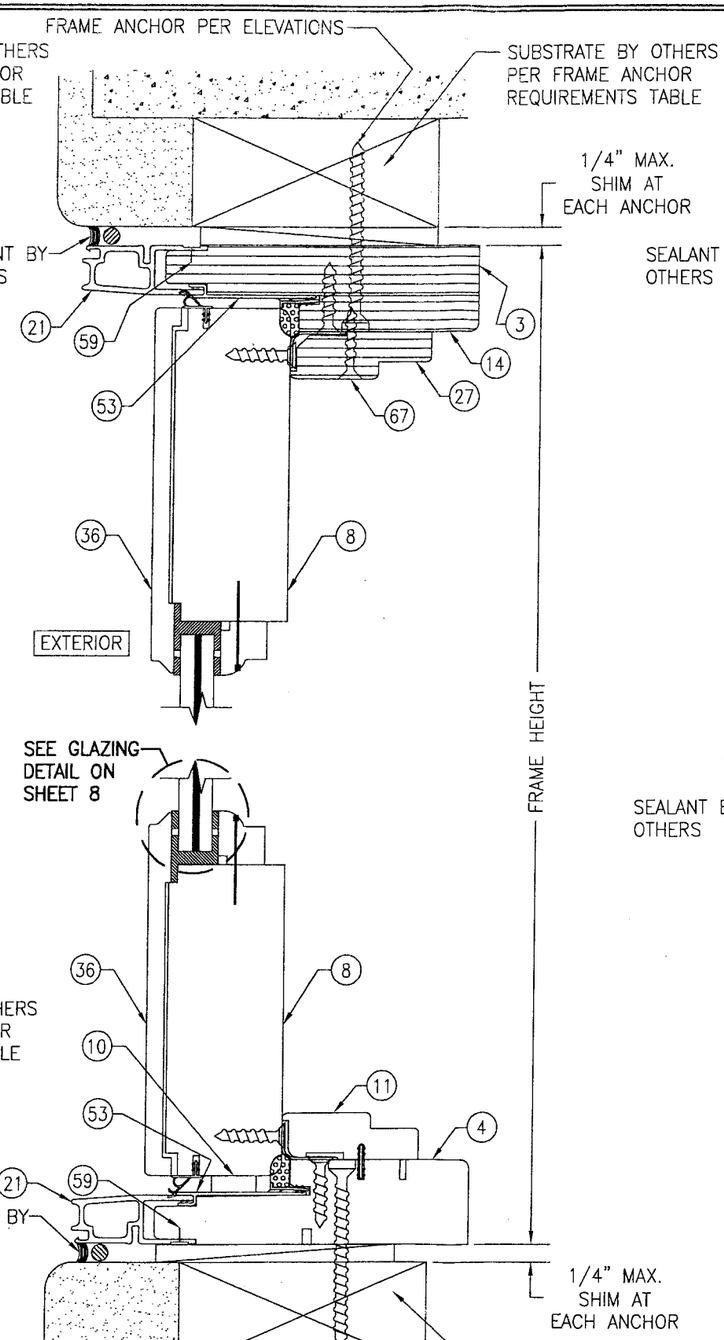

SECTION A2/5
SCALE: 1/2 FULL
(RECTANGULAR OR SHAPED WIDE SASH CONDITION)
FOR DETAILS NOT SHOWN SEE SECTION A1/5

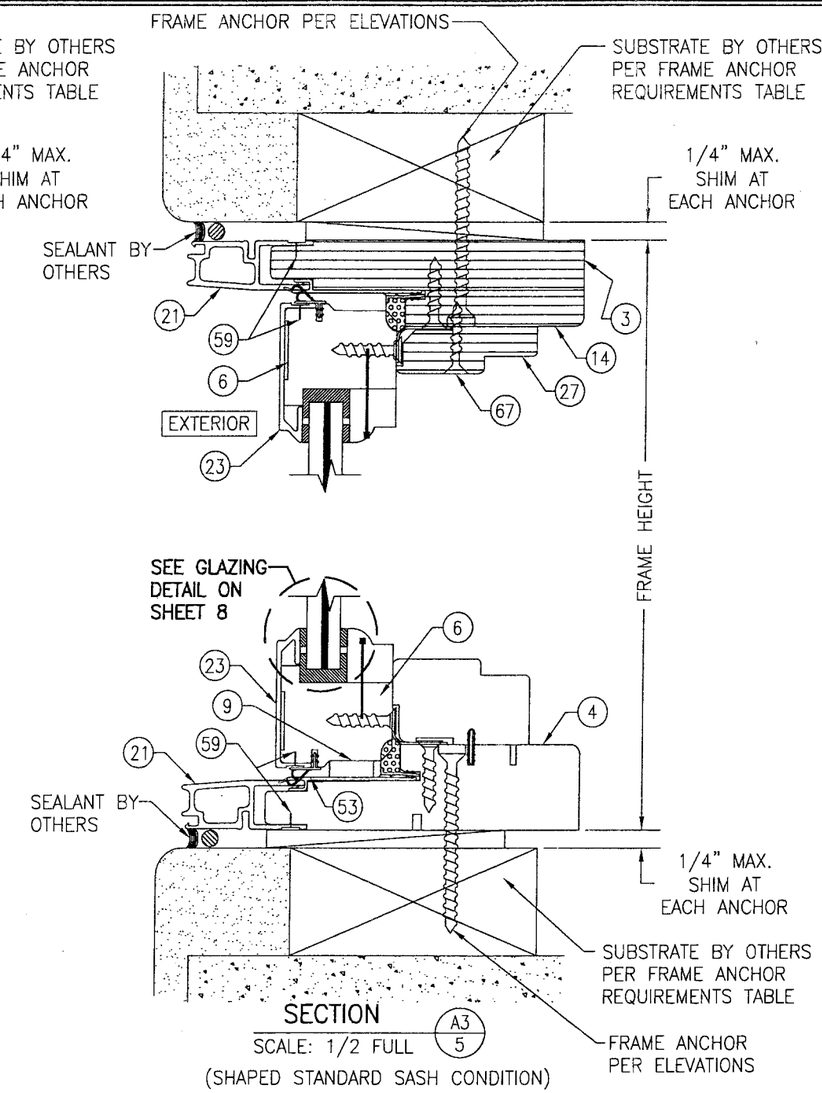

SECTION A3/5
SCALE: 1/2 FULL
(SHAPED STANDARD SASH CONDITION)
FOR DETAILS NOT SHOWN SEE SECTION A1/5

Approved as complying with the Florida Building Code
Date 07/03/08
NOA# 08-0213.08
Miami Dade Product Control Division
By Manuel Perez

DRAWN BY: W.R.M.	CHECKED BY: W.W.S.
PLOT: 1=2	DATE: 04/02/08

NO.	REVISION DESCRIPTION	BY	DATE

DRAWING TITLE
CLAD CASEMASTER PICTURE STORMPLUS IZ4

MANUFACTURER
MARVIN WINDOWS & DOORS
HIGHWAY 11; P.O. BOX 100
WARROAD, MN 56763
800-346-5044

CONSULTANTS
W. W. SCHAEFER ENGINEERING & CONSULTING, P.A.
8895 N. MILITARY TRAIL; SUITE C-204
PALM BEACH GARDENS, FL 33410
PHONE: 561-775-4902 FAX: 561-775-4903

CERTIFICATION
APR 02 2008
WARREN W. SCHAEFER, P.E.
P.E. NO. 44135

DRAWING NO. 1536
REV.
SHEET NO. 5 OF 10

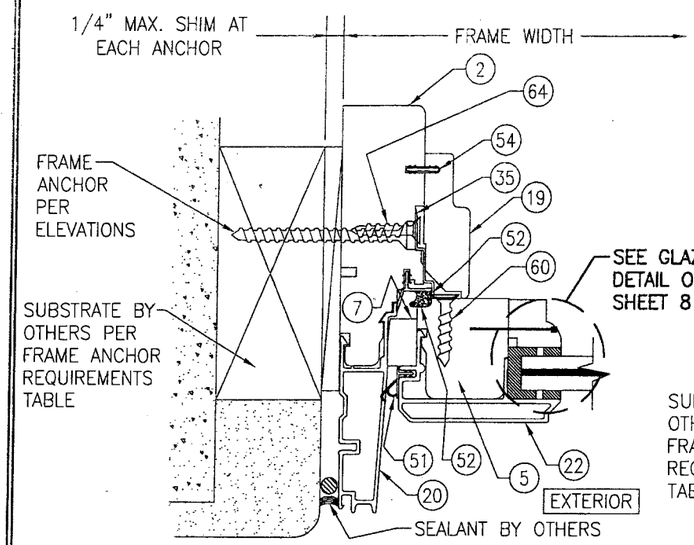

SECTION B1/6
SCALE: 1/2 FULL
(RECTANGULAR STANDARD SASH CONDITION)

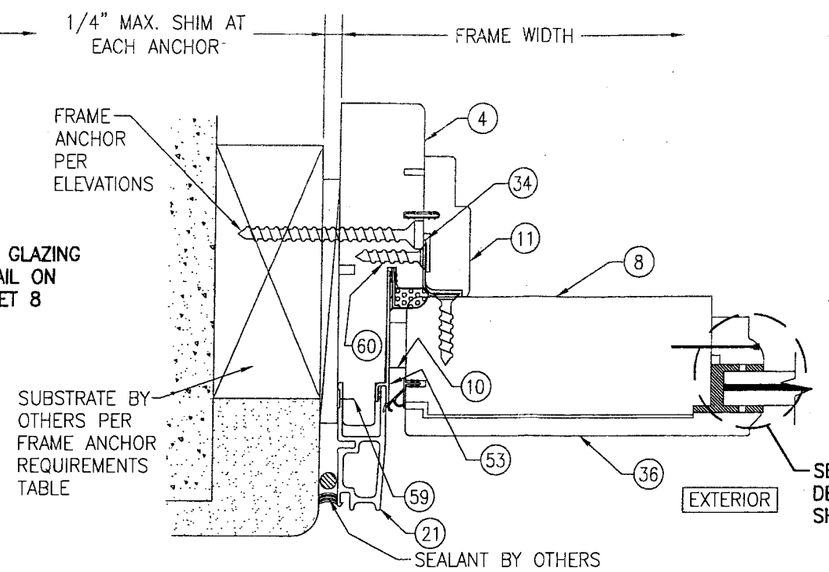

SECTION B2/6
SCALE: 1/2 FULL
(RECTANGULAR OR SHAPED WIDE SASH CONDITION)

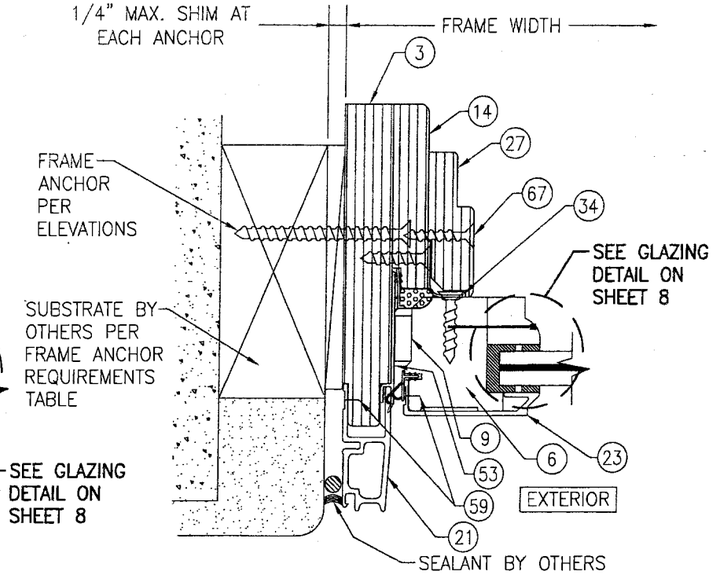

SECTION B3/6
SCALE: 1/2 FULL
(SHAPED STANDARD SASH CONDITION)
FOR DETAILS NOT SHOWN SEE SECTION B1/6

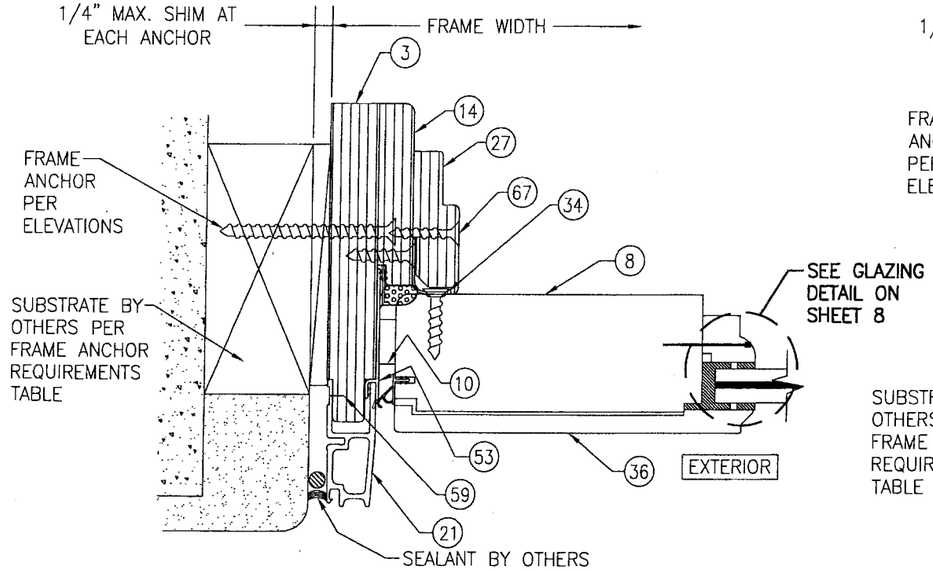

SECTION B4/6
SCALE: 1/2 FULL
(SHAPED WIDE SASH CONDITION)
FOR DETAILS NOT SHOWN SEE SECTION B1/6

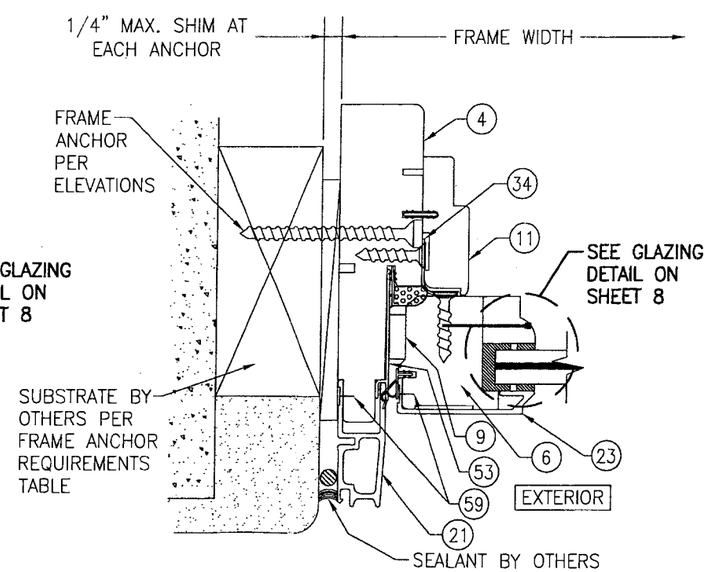

SECTION B5/6
SCALE: 1/2 FULL
(SHAPED STANDARD SASH CONDITION)
FOR DETAILS NOT SHOWN SEE SECTION B1/6

Approved as complying with the Florida Building Code
Date 07/03/08
NOA# 08-0213.08
Miami Dade Product Control Division
By Manuel Perez

DRAWN BY: W.R.M.	CHECKED BY: W.W.S.
PLOT: 1=2	DATE: 04/02/08

NO.	REVISION DESCRIPTION	BY	DATE

DRAWING TITLE
CLAD CASEMASTER PICTURE STORMPLUS IZ4

MANUFACTURER
MARVIN WINDOWS & DOORS
HIGHWAY 11; P.O. BOX 100
WARROAD, MN 56763
800-346-5044

CONSULTANTS
W. W. SCHAEFER ENGINEERING & CONSULTING, P.A.
8895 N. MILITARY TRAIL; SUITE C-204
PALM BEACH GARDENS, FL 33410
PHONE: 561-775-4902 FAX: 561-775-4903

CERTIFICATION
APR 02 2008
WARREN W. SCHAEFER, P.E.
P.E. NO. 44135

DRAWING NO. 1536
REV.
SHEET NO. 6 OF 10

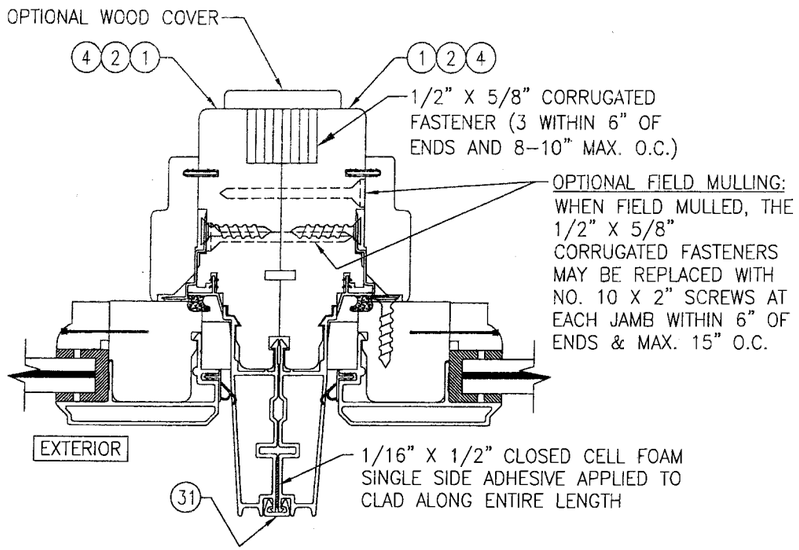

SECTION C1/7
SCALE: 1/2 FULL

(NON–REINFORCED MULLION WITH STANDARD SASH)
(FOR DETAILS NOT SHOWN SEE OTHER SECTIONS)
(RECTANGULAR WINDOW CONDITION SHOWN; SHAPED WINDOW CONDITIONS ARE JOINED THE SAME)

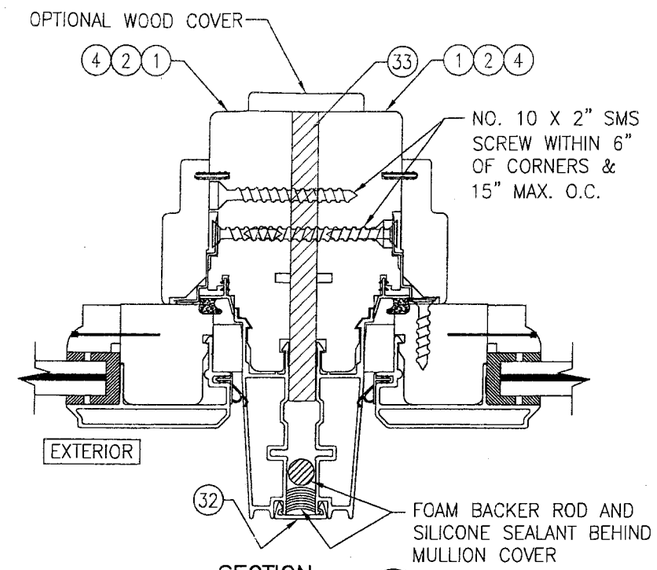

SECTION C2/7
SCALE: 1/2 FULL

(REINFORCED MULLION WITH STANDARD SASH)
(FOR DETAILS NOT SHOWN SEE OTHER SECTIONS)
(RECTANGULAR WINDOW CONDITION SHOWN; SHAPED WINDOW CONDITIONS ARE JOINED THE SAME)

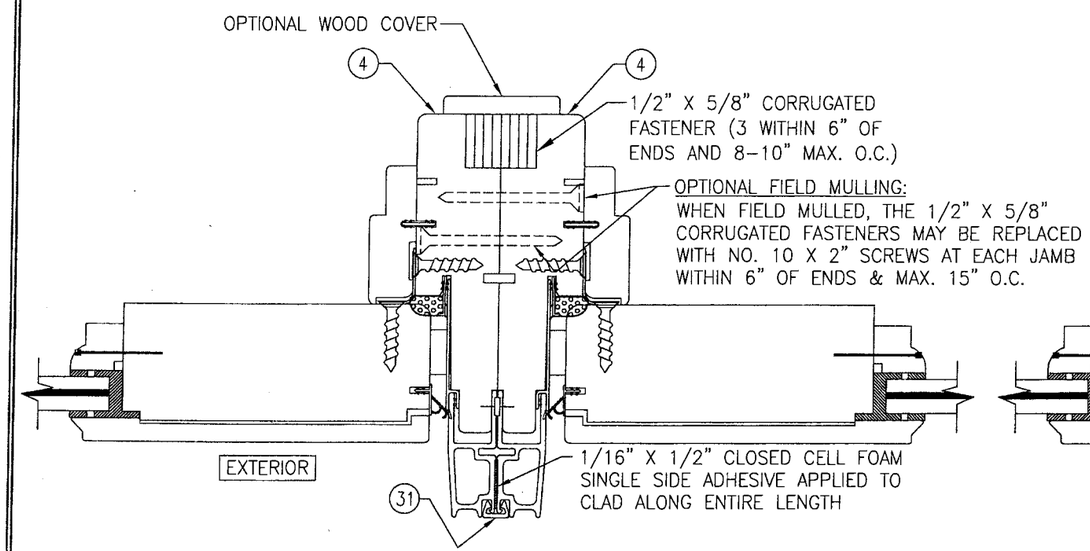

SECTION C3/7
SCALE: 1/2 FULL

(NON–REINFORCED MULLION WITH WIDE SASH)
(FOR DETAILS NOT SHOWN SEE OTHER SECTIONS)
(RECTANGULAR WINDOW CONDITION SHOWN; SHAPED WINDOW CONDITIONS ARE JOINED THE SAME)

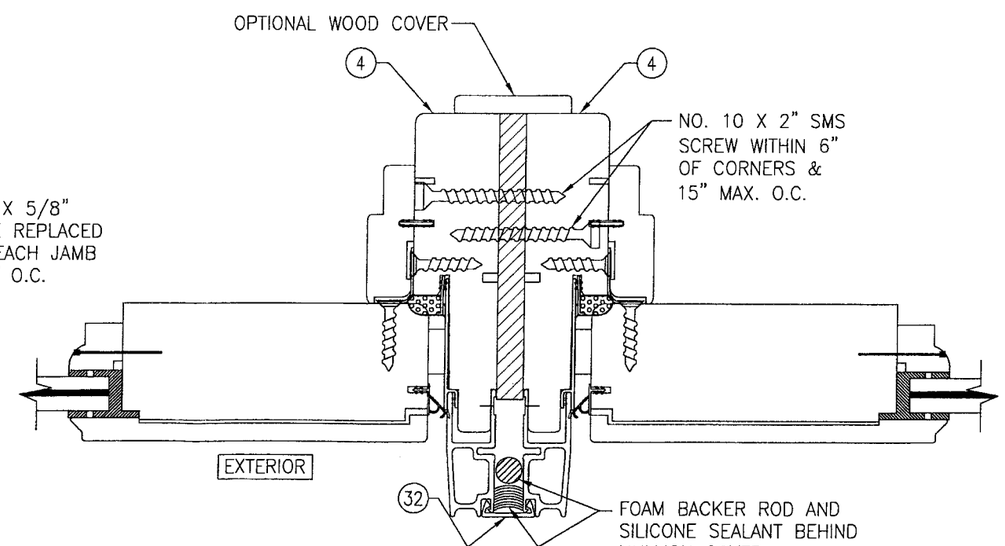

SECTION C4/7
SCALE: 1/2 FULL

(REINFORCED MULLION WITH WIDE SASH)
(FOR DETAILS NOT SHOWN SEE OTHER SECTIONS)
(RECTANGULAR WINDOW CONDITION SHOWN; SHAPED WINDOW CONDITIONS ARE JOINED THE SAME)

Approved as complying with the Florida Building Code
Date 07/03/08
NOA# 08-0213.08
Miami Dade Product Control Division
By Manuel Diaz

DRAWN BY: W.R.M.	CHECKED BY: W.W.S.
PLOT: 1=2	DATE: 04/02/08

NO.	REVISION DESCRIPTION	BY	DATE

DRAWING TITLE
CLAD CASEMASTER PICTURE STORMPLUS IZ4

MANUFACTURER
MARVIN WINDOWS & DOORS
HIGHWAY 11; P.O. BOX 100
WARROAD, MN 56763
800–346–5044

CONSULTANTS
W. W. SCHAEFER ENGINEERING & CONSULTING, P.A.
8895 N. MILITARY TRAIL; SUITE C-204
PALM BEACH GARDENS, FL 33410
PHONE: 561-775-4902 FAX: 561-775-4903

CERTIFICATION
APR 02 2009
WARREN W. SCHAEFER, P.E.
P.E. NO. 44135

DRAWING NO. 1536
REV.
SHEET NO. 7 OF 10

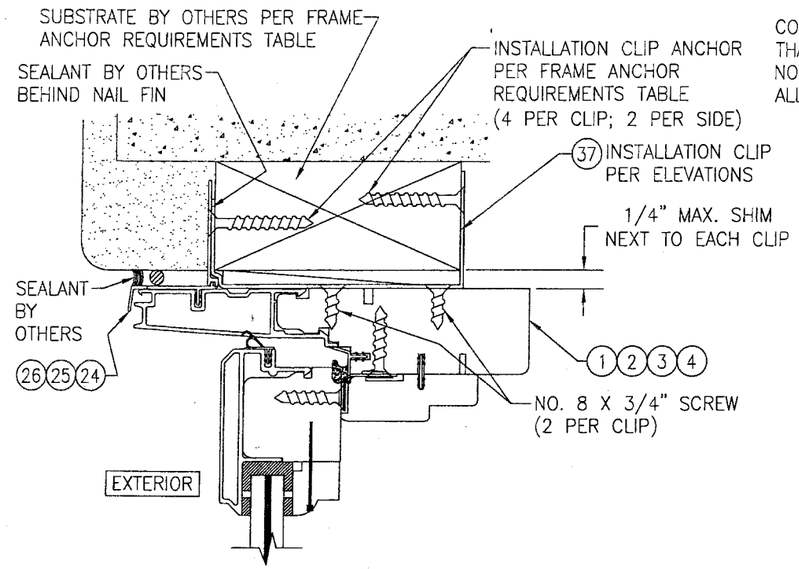

OPTIONAL INSTALLATION CLIP DETAIL

(HEAD SECTION SHOWN, SILL & SIDES ARE INSTALLED THE SAME)
(FOR DETAIL NOT SHOWN, SEE OTHER SECTIONS)

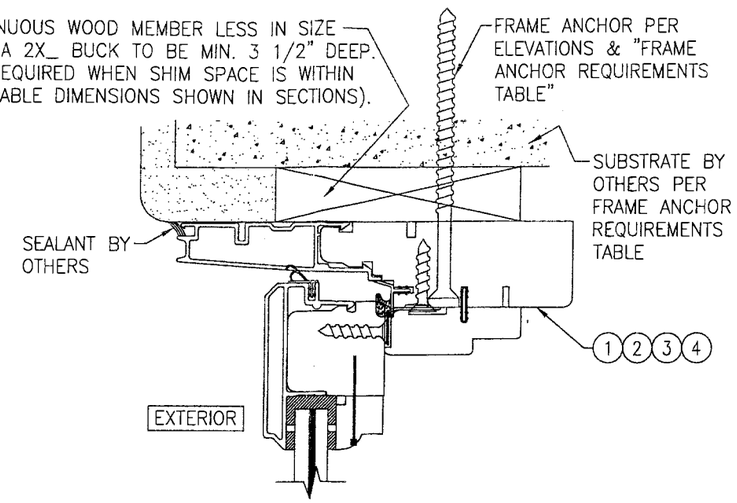

OPTIONAL DIRECT MOUNT DETAIL TO SUBSTRATE WITH SPACER

(HEAD SECTION SHOWN, SILL & SIDES ARE INSTALLED THE SAME)
(FOR DETAIL NOT SHOWN, SEE OTHER SECTIONS)

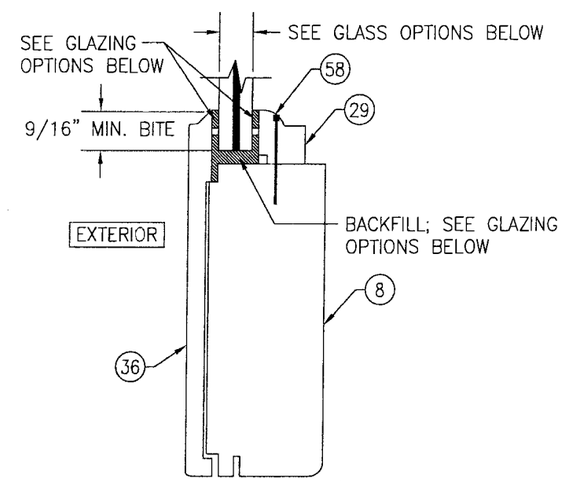

TYPICAL GLAZING DETAIL (RECTANGULAR OR SHAPED WINDOW WITH WIDE SASH)

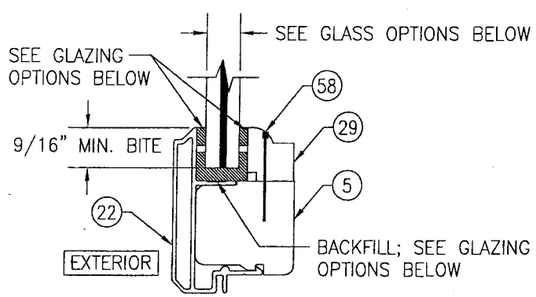

TYPICAL GLAZING DETAIL (RECTANGULAR WINDOW WITH STANDARD SASH)

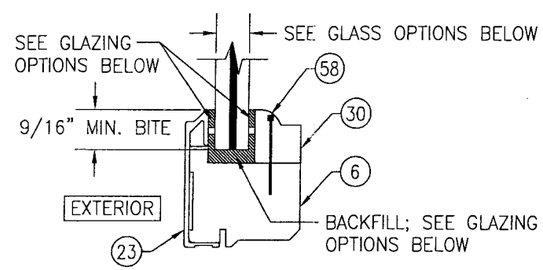

TYPICAL GLAZING DETAIL (SHAPED WINDOW WITH STANDARD SASH)

GLASS OPTIONS

GLASS OPTION A: 9/16" THICK LAMINATED GLASS (1/4" AN./0.09" DUPONT SGP/1/4" AN.)
GLASS OPTION B: 9/16" THICK LAMINATED GLASS (1/4" HT.ST./0.09" DUPONT SGP/1/4" HT.ST.)
GLASS OPTION C: 3/8" THICK LAMINATED GLASS (5/32" AN./0.090" DUPONT SGP/5/32" AN.)

GLAZING OPTIONS

GLAZING OPTION A: POLYOLEFIN FOAM WITH ACRYLIC ADHESIVE GLAZING TAPE AT EXTERIOR & INTERIOR WITH DOW 995 BACKFILL
GLAZING OPTION B: GE RAPID STRENGTH EXTERIOR, INTERIOR & BACKFILL

Approved as complying with the Florida Building Code
Date 07/03/08
NOA# 08-0213.08
Miami Dade Product Control Division
By

DRAWN BY: W.R.N.	CHECKED BY: W.W.S.
PLOT: 1=2	DATE: 04/02/08

NO.	REVISION DESCRIPTION	BY	DATE

DRAWING TITLE
CLAD CASEMASTER PICTURE STORMPLUS IZ4

MANUFACTURER
MARVIN WINDOWS & DOORS
HIGHWAY 11; P.O. BOX 100
WARROAD, MN 56763
800-346-5044

CONSULTANTS
W. W. SCHAEFER ENGINEERING & CONSULTING, P.A.
8895 N. MILITARY TRAIL; SUITE C-204
PALM BEACH GARDENS, FL 33410
PHONE: 561-775-4902 FAX: 561-775-4903

CERTIFICATION
APR 02 2008
WARREN W. SCHAEFER, P.E.
P.E. NO. 44135

DRAWING NO. 1536
REV.
SHEET NO. 8 OF 10

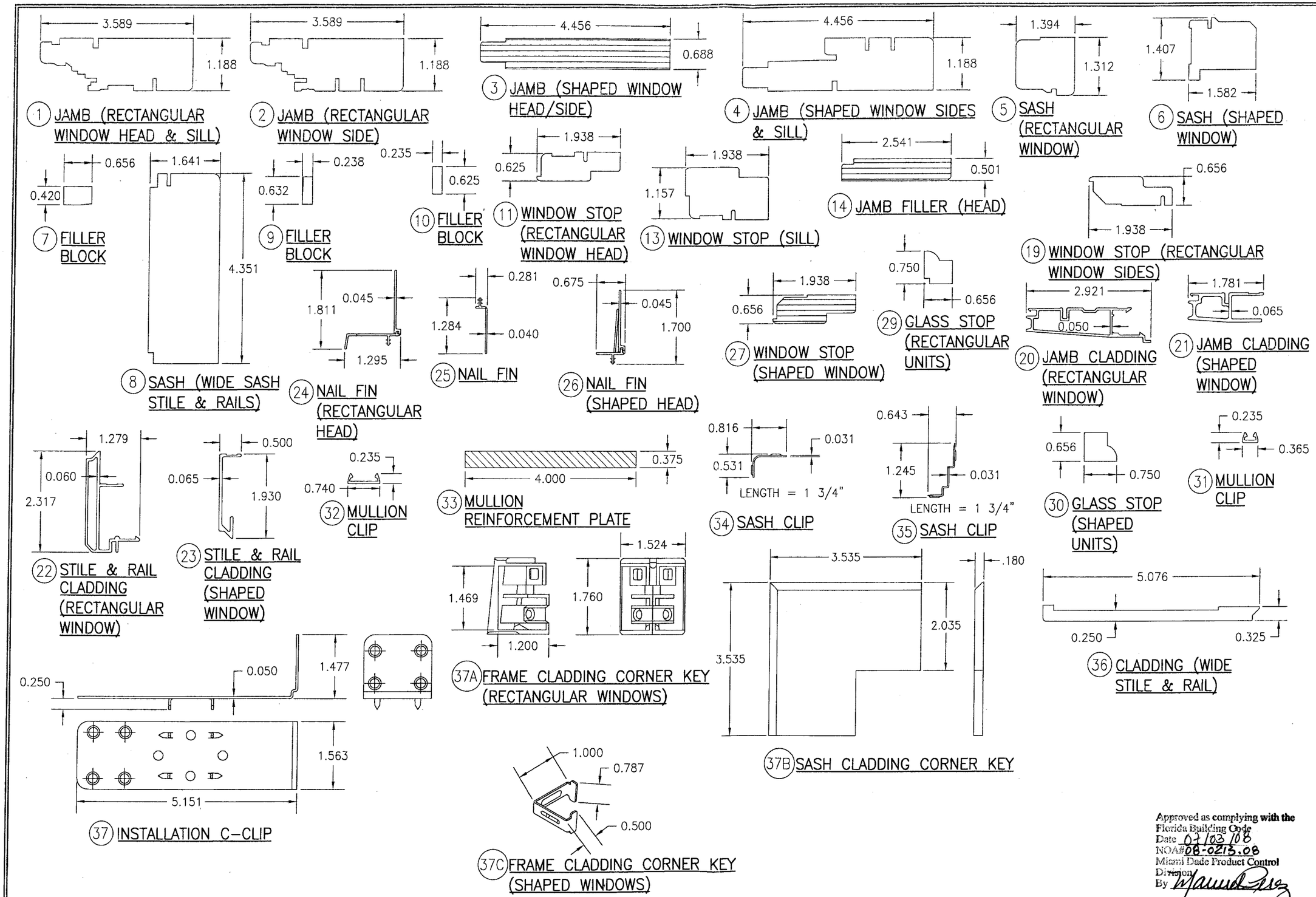

Approved as complying with the Florida Building Code
Date 04/03/08
NOA# 08-0213.08
Miami Dade Product Control Division
By

DRAWN BY: W.R.M.	CHECKED BY: W.W.S.
PLOT: 1=2	DATE: 04/02/08

NO.	REVISION DESCRIPTION	BY	DATE

DRAWING TITLE
CLAD CASEMASTER PICTURE STORMPLUS IZ4

MANUFACTURER
MARVIN WINDOWS & DOORS
HIGHWAY 11; P.O. BOX 100
WARROAD, MN 56763
800-346-5044

CONSULTANTS
W. W. SCHAEFER ENGINEERING & CONSULTING, P.A.
8895 N. MILITARY TRAIL; SUITE C-204
PALM BEACH GARDENS, FL 33410
PHONE: 561-775-4902 FAX: 561-775-4903

CERTIFICATION
APR 02 2008
WARREN W. SCHAEFER, P.E.
P.E. NO. 44135

DRAWING NO. 1536
REV.
SHEET NO. 9 OF 10

ITEM #	ITEM DESCRIPTION	MANUFACTURER/NOTES
	PARTS	
1	JAMB (RECTANGULAR WINDOW HEAD & SILL)	* WOOD
2	JAMB (RECTANGULAR WINDOW SIDES)	* WOOD
3	JAMB (SHAPED WINDOW HEAD/SIDE)	LVL
4	JAMB (SHAPED WINDOW SIDES & SILL)	* WOOD
5	SASH (RECTANGULAR WINDOW)	* WOOD
6	SASH (SHAPED WINDOW)	* WOOD
7	FILLER BLOCK	* WOOD
8	SASH (WIDE SASH STILE & RAILS)	* WOOD
9	FILLER BLOCK	* WOOD
10	FILLER BLOCK	* WOOD
11	WINDOW STOP (RECTANGULAR WINDOW HEAD)	* WOOD
13	WINDOW STOP (SILL)	* WOOD
14	JAMB FILLER (SHAPED WINDOW HEAD)	LVL
19	WINDOW STOP (RECTANGULAR WINDOW SIDES)	WOOD
18	WINDOW STOP SKIN (SIDE JAMB)	WOOD VENEER
20	JAMB CLADDING (RECTANGULAR WINDOW)	6063-T5 ALUMINUM
21	JAMB CLADDING (SHAPED WINDOW)	6063-T5 ALUMINUM
22	STILE & RAIL CLADDING (RECTANGULAR WINDOW)	6063-T5 ALUMINUM
23	STILE & RAIL CLADDING (SHAPED WINDOW)	6063-T5 ALUMINUM
24	NAIL FIN (RECTANGULAR HEAD)	6063-T5 ALUMINUM
25	NAIL FIN	6063-T5 ALUMINUM
26	NAIL FIN (SHAPED HEAD)	6063-T5 ALUMINUM
27	WINDOW STOP (SHAPED WINDOW HEAD)	LVL
29	GLASS STOP	* WOOD
30	GLASS STOP	* WOOD
31	MULLION CLIP	6063-T5 ALUMINUM
32	MULLION CLIP	6063-T5 ALUMINUM
33	MULLION REINFORCEMENT PLATE	6061-T6 ALUMINUM
37	INSTALLATION C-CLIP	50 KSI GALV. STEEL
37A	FRAME CLAD CORNER KEY (RECTANGULAR WINDOWS)	NYLON
37B	SASH CLADDING CORNER KEY	5052 ALUMINUM
37C	FRAME CLAD CORNER KEY (SHAPED WINDOWS)	6063-T1 ALUMINUM

ITEM #	ITEM DESCRIPTION	MANUFACTURER/NOTES
	PARTS	
	SEALS & SEALANTS	
51	SASH WEATHERSTRIP	RIGID GLASS FILLED POLYPROPOLENE BY INTEK
52	VINYL FRAME WEATHERSTRIP	BY AMSBURY
53	THERMAL BREAK	BY AMSBURY
54	CONNECTING BARB	PVC & GEON C70a0
	MISC. FASTENERS	
58	F-18 x 1.125" BRAD NAIL	3" FROM CORNERS & MAX. 8" O.C.
59	GSN 18 X 1/2" S.S. STAPLE	3" FROM CORNERS & MAX. 6" O.C.
61	NO. 10-32 FH MACHINE SCREW	4 PER HINGE
62	NO. 8 X 1" SMS	2 PER SNUBBER
63	NO. 7 X 1/2" SMS	2 PER SNUBBER
66	NO. 8 X 1" SMS	2" FROM ENDS & 5" TO 8" O.C.
67	NO. 6 X 1" TRIM HEAD WOOD SCREW	2" FROM ENDS & 5" TO 8" O.C.

* ALL WOOD USED WITH TESTED UNITS IS MIN. GRADE 2 WESTERN PINE. ALTERNATE WOOD SPECIES TO PINE ARE MIN. GRADE 2 MAHOGANY, OAK, CHERRY, CYPRUS, & DOUGLAS FIR

NOTE: ALL WOOD IS RECEIVED BY MARVIN WINDOWS & DOORS AS GRADE 2, BUT IS MACHINED BY MARVIN TO A SELECT GRADE USE.

Approved as complying with the
Florida Building Code
Date 07/03/08
NOA# 08-0213.08
Miami Dade Product Control
Division
By

DRAWN BY: W.R.M.	CHECKED BY: W.W.S.
PLOT: 1=2	DATE: 04/02/08

NO.	REVISION DESCRIPTION	BY	DATE

DRAWING TITLE
CLAD CASEMASTER PICTURE STORMPLUS 1Z4

MANUFACTURER
MARVIN WINDOWS & DOORS
HIGHWAY 11; P.O. BOX 100
WARROAD, MN 56763
800-346-5044

CONSULTANTS
W. W. SCHAEFER ENGINEERING & CONSULTING, P.A.
8895 N. MILITARY TRAIL; SUITE C-204
PALM BEACH GARDENS, FL 33410
PHONE: 561-775-4902 FAX: 561-775-4903

CERTIFICATION
APR 02 2008
WARREN W. SCHAEFER, P.E.
P.E. NO. 44135

DRAWING NO. 1536 REV

SHEET NO. 10 OF 10