MIAMI-DADE COUNTY
BUILDING CODE COMPLIANCE OFFICE (BCCO)
PRODUCT CONTROL DIVISION

MIAMI-DADE COUNTY, FLORIDA
METRO-DADE FLAGLER BUILDING
140 WEST FLAGLER STREET, SUITE 1603
MIAMI, FLORIDA 33130-1563
(305) 375-2901 FAX (305) 375-2908
www.miamidade.gov

NOTICE OF ACCEPTANCE (NOA)

Insulated Panel Systems, Inc.
2151 Opa-Locka Blvd.
Opa-Locka, FL 33054

SCOPE:

This NOA is being issued under the applicable rules and regulations governing the use of construction materials. The documentation submitted has been reviewed by Miami-Dade County Product Control Division and accepted by the Board of Rules and Appeals (BORA) to be used in Miami Dade County and other areas where allowed by the Authority Having Jurisdiction (AHJ).

This NOA shall not be valid after the expiration date stated below. The Miami-Dade County Product Control Division (In Miami Dade County) and/or the AHJ (in areas other than Miami Dade County) reserve the right to have this product or material tested for quality assurance purposes. If this product or material fails to perform in the accepted manner, the manufacturer will incur the expense of such testing and the AHJ may immediately revoke, modify, or suspend the use of such product or material within their jurisdiction. BORA reserves the right to revoke this acceptance, if it is determined by Miami-Dade County Product Control Division that this product or material fails to meet the requirements of the applicable building code.

This product is approved as described herein, and has been designed to comply with the High Velocity Hurricane Zone of the Florida Building Code.

DESCRIPTION: Insulated Wall Panel System

APPROVAL DOCUMENT: Drawing No. PC-08, titled " Insulated Wall Panel System ", sheets 1 and 2 of 2, prepared by Jose A. Martinez, P.E., dated May 15, 2008, signed and sealed by Jose A. Martinez, P.E. on May 15, 2008, bearing the Miami-Dade County Product Control Approval stamp with the Notice of Acceptance number and the approval date by the Miami-Dade County Product Control Division.

MISSILE IMPACT RATING: Large and Small Missile Impact

LABELING: Each panel shall bear a permanent label with the manufacturer's name or logo, city, state and the following statement: "Miami-Dade County Product Control Approved", unless otherwise noted herein.

RENEWAL of this NOA shall be considered after a renewal application has been filed and there has been no change in the applicable building code negatively affecting the performance of this product.

TERMINATION of this NOA will occur after the expiration date or if there has been a revision or change in the materials, use, and/or manufacture of the product or process. Misuse of this NOA as an endorsement of any product, for sales, advertising or any other purposes shall automatically terminate this NOA. Failure to comply with any section of this NOA shall be cause for termination and removal of NOA.

ADVERTISEMENT: The NOA number preceded by the words Miami-Dade County, Florida, and followed by the expiration date may be displayed in advertising literature. If any portion of the NOA is displayed, then it shall be done in its entirety.

INSPECTION: A copy of this entire NOA shall be provided to the user by the manufacturer or its distributors and shall be available for inspection at the job site at the request of the Building Official.

This NOA consists of this page 1, evidence submitted page E-1 as well as approval document mentioned above. The submitted documentation was reviewed by **Helmy A. Makar, P.E., M.S.**

MIAMI-DADE COUNTY APPROVED

Helmy A. Makar
06/19/2008

NOA No. 08-0214.01
Expiration Date: 06/12/2013
Approval Date: 06/12/2008

Insulated Panel Systems, Inc.

NOTICE OF ACCEPTANCE: EVIDENCE SUBMITTED

A. DRAWINGS

1. *Drawing No. PC-08, titled " Insulated Wall Panel System ", sheets 1 and 2 of 2, prepared by Jose A. Martinez, P.E., dated May 15, 2008, signed and sealed by Jose A. Martinez, P.E. on May 15, 2008.*

B. TESTS

1. *Test report on Large Missile Impact Test, Cyclic Wind Pressure Test, Uniform Static Air Pressure Test, and ASTM E 72-05 on Insulated Wall Panel System, prepared by Fenestration Testing Laboratory, Inc., Report No. 5503, dated 01/31/2008, signed and sealed by Carlos S. Rionda, P.E.*

C. CALCULATIONS

1. *Calculations titled "Wall Panel Calculation ", dated 02/06/2008, pages 1 through 8 of 8, prepared by Jose A. Martinez, P.E., signed and sealed by Jose A. Martinez, P.E.*

D. QUALITY ASSURANCE

1. *By Miami-Dade County Building Code Compliance Office.*

E. MATERIAL CERTIFICATIONS

1. *Foam Plastic per N.O.A. # 06-1011.05.*

Helmy A. Makar, P.E., M.S.
Product Control Examiner
NOA No. 08-0214.01
Expiration Date: 06/12/2013
Approval Date: 06/12/2008

GENERAL NOTES

1.-THESE APPROVAL DOCUMENTS REPRESENT A WALL PANEL SYSTEM ANALYZED WITH THE PROVISION SET FOR THE ISSUANCE OF A NOTICE OF ACCEPTANCE (NOA) BY MIAMI-DADE COUNTY PRODUCT CONTROL DIVISION FOR THE HIGH VELOCITY HURRICANE ZONE (HVHZ) OF THE FLORIDA BUILDING CODE

2.-THE INSULATED PANEL SYSTEMS ARE FORMED BY EPS FOAM CORE @ 1 Lb/Cu Ft & 26 GAUGE (T=0.018") 50ksi (MIN YIELD) GALVANIZED (G90) STEEL ON INTERIOR SIDE AND 18 GAUGE (T=0.045") 50ksi (MIN YIELD) GALVANIZED (G90) STEEL ON EXTERIOR SIDE JOINED W/ TWO CHANNELS WELDING EQ. TOGETHER USING 1" SPOT WELD AT 12"O.C., FORMING AN "I" BEAM SPACED AT 4'-00"C/C. ACCORDING TO CALCULATIONS AND TESTS BY INSULATED PANEL SYSTEMS, INC" THE PANEL SKIN SHALL BE MANUFACTURED FROM STEEL COMPLYING WITH ASTM 4653

3.-DESIGN IS BASED ON IMPACT, CYCLIC UNIFORM LOAD, REFERENCE FENESTRATION TESTING LABORATORY , INC CERT No 07-0306.9

4.-THIS WALL PANEL SYSTEM IS DESIGNED AND TESTED FOR THE FOLLOWING DESIGN AND SPAN CONDITIONS:

DESIGN PRESSURE RATING
+ 70 PSF -90 PSF
LARGE MISSILE IMPACT RESISTANCE

DESIGN COMPRESSIVE LOAD
1 050 LBS./LN. FT.

DESIGN TENSION LOAD
1 324 LBS./LN. FT

MAX SPAN 12 FT
MAX. RACKING LOAD
555 LBS./LN. FT

5.-AN ALLOWABLE STRESS INCREASE HAS NOT BEEN USED IN THE DESING OF THIS PRODUCT.

6.-THE WALL PANEL IS TO BE INSTALLED SUCH THAT IT IS CONNECTED TO THE HORIZONTAL ELEMENTS AND THE FOUNDATION SHOULD BE ABLE TO CREATE A SYSTEM THAT PROVIDES LATERAL STABILITY AND SUPPORT TO THE VERTICAL LOADS. THE ENGINEER OF RECORD / OR ARCHITECT SHALL VERIFY THE COMPLIANCE OF THE ABOVE REQUIREMENTS.

7.-$\frac{5}{16}$"x2$\frac{1}{4}$" LONG HEX HEAD TAPCONS @ 12" O.C. MAX. SHALL BE USED TO CONNECT TO THE FOUNDATION. #12 x 8" HWH TEK SCREWS @ 8" O.C. MAX SHALL BE USED TO CONNECT TO THE ROOF.

8.-ALL BOLTS AND WASHERS SHALL BE GALVANIZED OR STAINLESS STEEL WITH A MINIMUM TENSILE STRENGTH OF 60 K.S.I U.O.N.

9.-WINDOWS AND DOOR FRAME ARE NOT PART OF THIS PRODUCT CONTROL APPROVAL. PANELS SHALL BE ADJUSTED IN WIDTH TO ACOMADATE WINDOWS AND DOORS AND THE TOP AND/OR BOTTOM PORTIONS OF WINDOWS AND DOORS SHALL A REDUCED PANEL CONNECTED TO OTHER PANELS FOLLOWING THE PRODUCT CONTROL APPROVAL GUIDE LINES

10.-CAULKING BETWEEN PANELS IS NOT REQUIRED BECAUSE THE PANELS WILL BE COVERED WITH WIRE MESH AND PLASTER AND/OR ANY TYPE OF OUTSIDE PROTECTION AND COVERAGE SUCH AS BRICKS KEYSTONE, ETC.

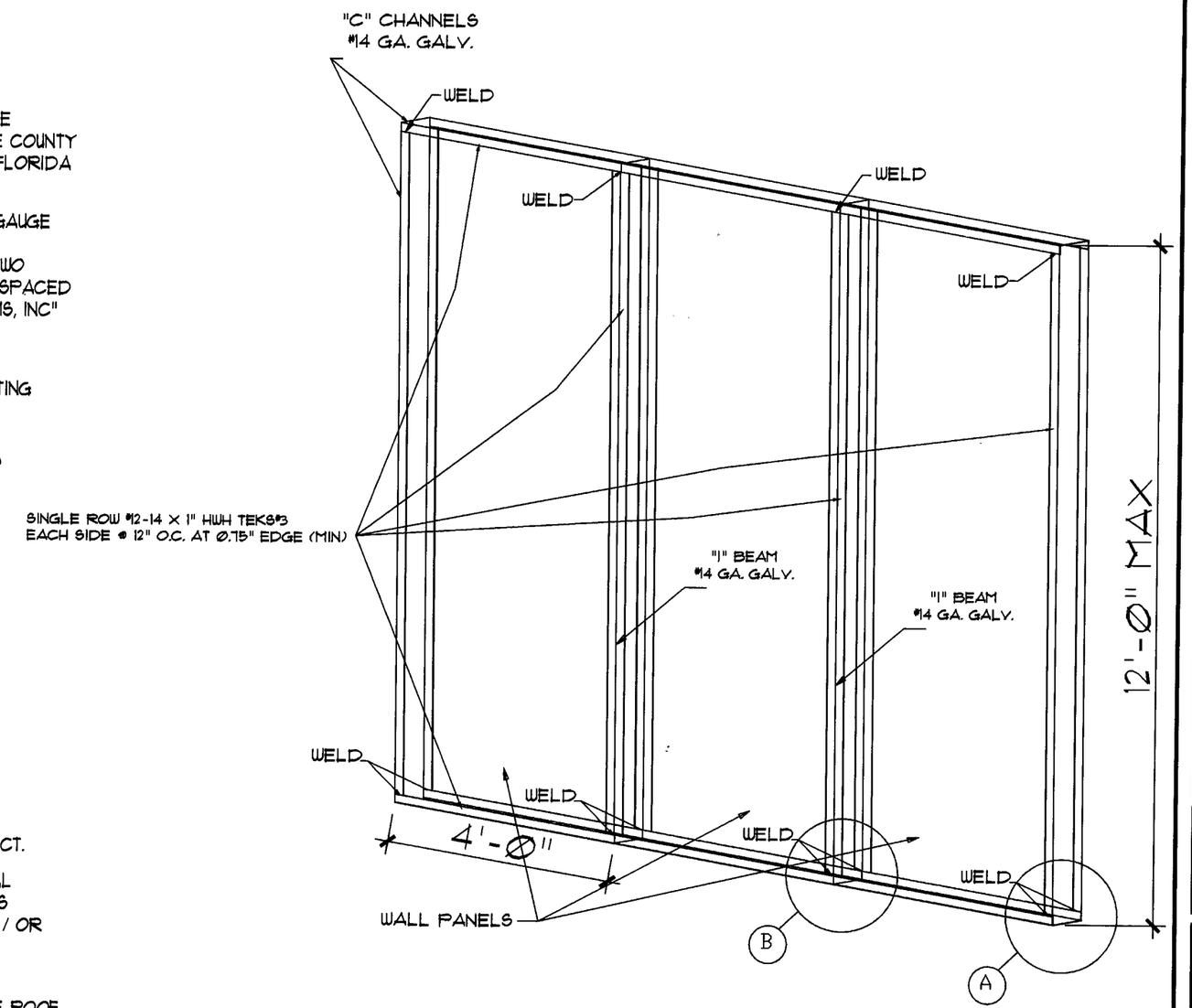

Approved as complying with the
Florida Building Code
Date 06/19/2008
NOA# 08-0214.01
Miami Dade Product Control
Division
By

Revisions

No.	Date	Description

Project: CONNECTION DETAILS
OWNER: INSULATED PANELS SYSTEMS, INC.
ADDRESS: 2151 OPA-LOCKA BLVD. 33054

Florida Register #031509PE

JOSE A. MARTINEZ. P.E
24 EAST 5th ST. HIALEAH. FL 33010.
Phone: 305-887-4417.
Fax: 305-884-3967.
Civil Structural

Florida Register #031509PE

Date 1-08-2008
Draw by
PC-08-01

Sheet
1 OF 2

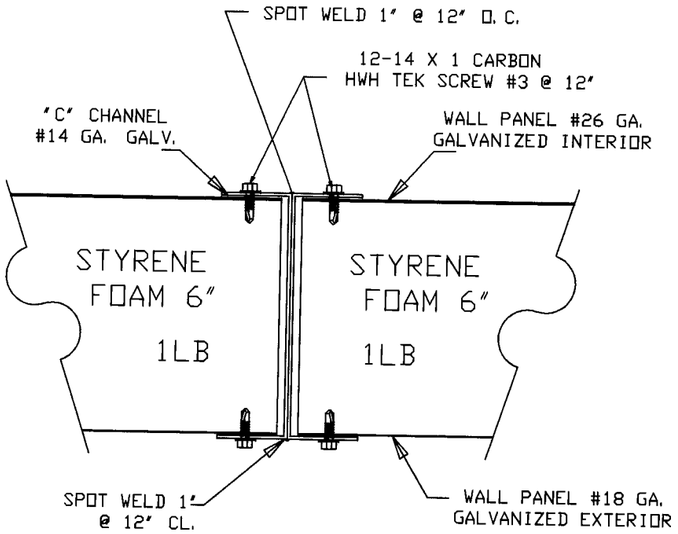

DETAIL - B -

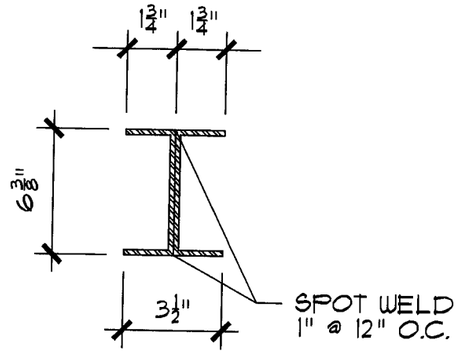

"I"-BEAM

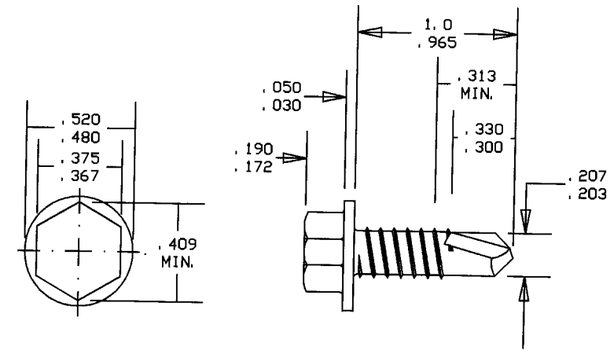

HWH TEK SCREW

Approved as complying with the Florida Building Code
Date 06/19/2008
NOA# 08-0214.01
Miami Dade Product Control Division
By Helen A. Martin

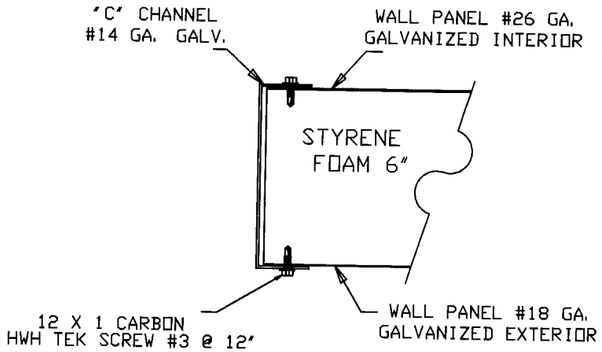

DETAIL - A -

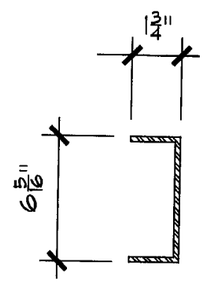

"C"- CHANNEL

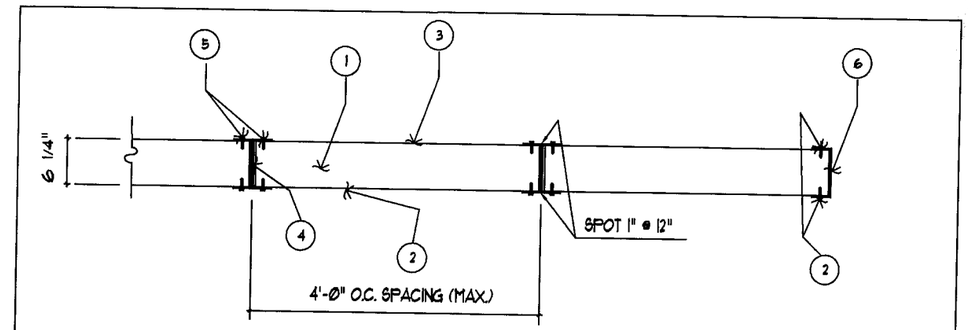

TYPICAL WALL PLAN

	DESCRIPTION
1	STYRENE FOAM 6"
2	EXTERIOR SKIN GALVANIZED STEEL 18 GA (T=0.045")
3	INTERIOR SKIN GALVANIZED STEEL 26 GA (T=0.018")
4	6 3/8" CHANNEL (DOUBLE MEMB.) 1 3/4" LEG 14 GA (T=0.071") SPOT WELD 1" @ 12" O.C.
5	SINGLE ROW #12 X 1" HWH TEKS #3 EACH SIDE @ 12" O.C
6	6 5/16" CHANNEL 1 3/4" LEG 14 GA (T=0.071").

Revisions

No.	Date	Description

Project: CONNECTION DETAILS
OWNER: INSULATED PANELS SYSTEMS, INC.
ADDRESS: 2151 OPA-LOCKA BLVD. 33054

Florida Register #031509PE

JOSE A. MARTINEZ. P.E
24 EAST 5th ST. HIALEAH, FL 33010
Phone: 305-887-4417.
Fax: 305-884-3967.
Civil Structural
Florida Register #031509PE

Date 1-08-2008
Drawn by
PC-08-02

Sheet
2 OF 2