MIAMI-DADE COUNTY
BUILDING CODE COMPLIANCE OFFICE (BCCO)
PRODUCT CONTROL DIVISION

MIAMI-DADE COUNTY, FLORIDA
METRO-DADE FLAGLER BUILDING
140 WEST FLAGLER STREET, SUITE 1603
MIAMI, FLORIDA 33130-1563
(305) 375-2901 FAX (305) 372-6339
www.maimidade.gov/buildingcode

NOTICE OF ACCEPTANCE (NOA)

EFCO Corporation
1000 County Road
Monett, MO 65708

SCOPE:

This NOA is being issued under the applicable rules and regulations governing the use of construction materials. The documentation submitted has been reviewed by Miami-Dade County Product Control Division and accepted by the Board of Rules and Appeals (BORA) to be used in Miami Dade County and other areas where allowed by the Authority Having Jurisdiction (AHJ).

This NOA shall not be valid after the expiration date stated below. The Miami-Dade County Product Control Division (In Miami Dade County) and/or the AHJ (in areas other than Miami Dade County) reserve the right to have this product or material tested for quality assurance purposes. If this product or material fails to perform in the accepted manner, the manufacturer will incur the expense of such testing and the AHJ may immediately revoke, modify, or suspend the use of such product or material within their jurisdiction. BORA reserves the right to revoke this acceptance, if it is determined by Miami-Dade County Product Control Division that this product or material fails to meet the requirements of the applicable building code.

This product is approved as described herein, and has been designed to comply with the Florida Building Code, including the High Velocity Hurricane Zone.

DESCRIPTION: Series "810-I" Outswing Aluminum Casement Window – S.M.I.

APPROVAL DOCUMENT: Drawing No. **1574,** titled "Series 810-I Small Missile Impact Casement Window", Sheets 1 through 5 of 5, dated 02/11/08, prepared by W.W. Schaefer Engineering & Consulting, P.A., signed and sealed by Warren W. Schaefer, P.E, bearing the Miami-Dade County Product Control Revision stamp with the Notice of Acceptance number and Expiration date by the Miami-Dade County Product Control Division.

MISSILE IMPACT RATING: Small Missile Impact Resistant

LABELING: Each unit shall bear a permanent label with the manufacturer's name or logo, city, state and following statement: "Miami-Dade County Product Control Approved" or the Product Control Seal, unless otherwise noted herein.

RENEWAL of this NOA shall be considered after a renewal application has been filed and there has been no change in the applicable building code negatively affecting the performance of this product.

TERMINATION of this NOA will occur after the expiration date or if there has been a revision or change in the materials, use, and/or manufacture of the product or process. Misuse of this NOA as an endorsement of any product, for sales, advertising or any other purposes shall automatically terminate this NOA. Failure to comply with any section of this NOA shall be cause for termination and removal of NOA.

ADVERTISEMENT: The NOA number preceded by the words Miami-Dade County, Florida, and followed by the expiration date may be displayed in advertising literature. If any portion of the NOA is displayed, then it shall be done in its entirety.

INSPECTION: A copy of this entire NOA shall be provided to the user by the manufacturer or its distributors and shall be available for inspection at the job site at the request of the Building Official.

This NOA **revises and renews NOA # 02-0410.05** and consists of this page 1 and evidence pages E-1 and E-2, as well as approval document mentioned above.

The submitted documentation was reviewed by **Manuel Perez, P.E.**

MIAMI-DADE COUNTY APPROVED

NOA No. 08-0225.06
Expiration Date: November 07, 2012
Approval Date: March 20, 2008

EFCO Corporation

NOTICE OF ACCEPTANCE: EVIDENCE SUBMITTED

A. DRAWINGS

1. Manufacturer's die drawings and sections.
2. Drawing No. **1574**, titled "Series 810-I Small Missile Impact Casement Window", Sheets 1 through 5 of 5, dated 02/11/08, prepared by W.W. Schaefer Engineering & Consulting, P.A., signed and sealed by Warren W. Schaefer, P.E.

B. TESTS

1. Test reports on: 1) Uniform Static Air Pressure Test, Loading per PA 202-94
   2) Large Missile Impact Test per PA 201-94
   3) Cyclic Wind Pressure Loading per PA 203-94

   along with marked-up drawings and installation diagram of an aluminum casement window (spec.#7), prepared by Hurricane Test Laboratory, Test Report No. **0046-1116-01**, dated 11/26/01, signed and sealed by Vinu J. Abraham, P.E.
   (Submitted under NOA# 02-0410.05)
2. Test reports on: 1) Air Infiltration Test, per PA 202-94
   2) Uniform Static Air Pressure Test, Loading per PA 202-94
   3) Water Resistance Test, per PA 202-94
   4) Small Missile Impact Test per PA 201-94
   5) Cyclic Wind Pressure Loading per PA 203-94
   6) Forced Entry Test, per PA 202-94

   along with marked-up drawings and installation diagram of an aluminum casement window (spec. #1,2,3,4,5,7) prepared by Hurricane Test Laboratory, Test Report No. **0046-0101-02**, dated 12/26/01, signed and sealed by Vinu J. Abraham, P.E.
   (Submitted under NOA# 02-0410.05)

C. CALCULATIONS

1. Anchor verification calculations and structural analysis, complying with FBC-2004, prepared by W.W. Schaefer Engineering & Consulting, P.A., dated 02/19/08 signed and sealed by Warren W. Schaefer, P.E.
   Complies with ASTM E1300-02

D. QUALITY ASSURANCE

1. Miami Dade Building Code Compliance Office (BCCO).

Manuel Perez, P.E.
Product Control Examiner
NOA No. 08-0225.06
Expiration Date: November 07, 2012
Approval Date: March 20, 2008

NOTICE OF ACCEPTANCE: EVIDENCE SUBMITTED

E. MATERIAL CERTIFICATIONS (continued)

1. Notice of Acceptance No. **06-0216.06** issued to Solutia Inc. for their "**Saflex IIIG Clear or colored Interlayer**" dated 05/04/06, expiring on 05/21/11.

F. STATEMENTS

1. Statement letter of conformance, dated 2/19/08, signed and sealed by Warren Schaefer, P.E.
2. Statement letter of no financial interest, dated 2/19/08, signed and sealed by Warren Schaefer, P.E.
3. Laboratory compliance letter for Test Report no. **HTL01085** issued by Hurricane Test Laboratory, dated 3/15/02, signed and sealed by Vinu J. Abraham, P.E. ***(Submitted under NOA# 02-0410.05)***

G. OTHER

1. Notice of Acceptance No. **02-0410.05**, issued to EFCO Corporation for their Series "810-I Aluminum **Casement** Window", approved on 11/07/02 and expiring on 11/07/07.

Manuel Perez, P.E.
Product Control Examiner
NOA No. 08-0225.06
Expiration Date: November 07, 2012
Approval Date: March 20, 2008

HINGE QUANTITY TABLE	
WINDOW HEIGHT	QUANTITY REQUIRED
GREATER THAN 43"	3
43" AND SMALLER	2

LOCK/KEEPER QUANTITY TABLE	
WINDOW HEIGHT	QUANTITY REQUIRED
55 1/2" TO 72"	4
38 3/4" TO 55 3/8"	3
SMALLER THAN 38 3/4"	2

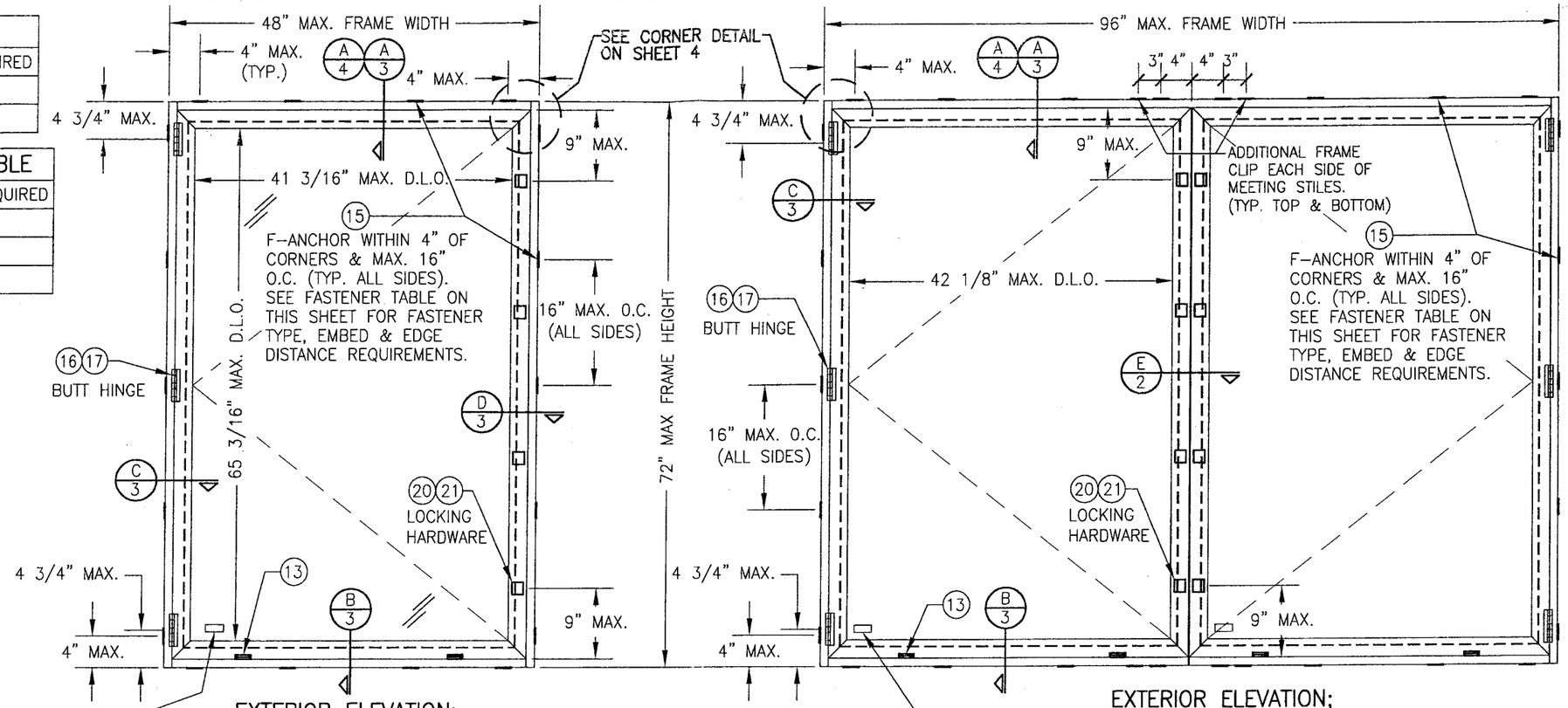

EXTERIOR ELEVATION;
SINGLE OPERABLE CASEMENT WINDOW
SCALE: 3/4"=1'-0"

EXTERIOR ELEVATION;
DOUBLE OPERABLE CASEMENT WINDOW
SCALE: 3/4"=1'-0"

ALLOWABLE DESIGN LOAD	
POSITIVE	NEGATIVE
90 PSF	100 PSF

THE FOLLOWING LABEL SHALL BE PLACED AT THE INNER BOTTOM RIGHT CORNER OF THE WINDOW:

EFCO CORPORATION, MONETT MISSOURI
MIAMI-DADE COUNTY PRODUCT CONTROL APPROVED
SMALL MISSILE IMPACT UNIT

GENERAL NOTES

1. THESE WINDOW SYSTEMS HAVE BEEN TESTED, ANALYZED AND APPROVED FOR DESIGN PRESSURES NOT TO EXCEED THOSE SHOWN IN THE "ALLOWABLE DESIGN LOADS" TABLE(S).
2. BUCKING, OPENINGS & BUCKING FASTENERS MUST BE PROPERLY DESIGNED & INSTALLED TO TRANSFER WIND LOADS TO THE STRUCTURE.
3. ALL HARDWARE & FASTENERS SHALL BE IN ACCORDANCE WITH THESE DRAWINGS & SHALL NOT VARY UNLESS SPECIFICALLY MENTIONED ON THE DRAWINGS.
4. THE DETAILS & SPECIFICATIONS SHOWN HEREIN REPRESENT THE PRODUCTS TESTED & PROPOSED FOR WATER, AIR, IMPACT, CYCLIC & UNIFORM STATIC AIR PRESSURE TESTING IN CONFORMANCE WITH THE 2004 & 2007 FLORIDA BUILDING CODE PROTOCOLS TAS-201, 202 & 203 FOR SMALL MISSILE IMPACT WINDOWS.
5. THESE WINDOW SYSTEMS HAVE BEEN DESIGNED IN ACCORDANCE WITH THE 2004 & 2007 FLORIDA BUILDING CODE (FBC) INCLUDING HIGH VELOCITY HURRICANE ZONES (HVHZ).
6. WHEN GLAZED FOR SMALL MISSILE IMPACT THESE WINDOWS MAY NOT BE INSTALLED AT ELEVATIONS BELOW 30 FT. ABOVE GRADE WITHOUT AN APPROVED SHUTTER.
7. ALL ANCHORS SHALL BE INSTALLED AS SPECIFIED ON THESE DRAWINGS. SPECIFIED EMBEDMENT TO BASE MATERIAL SHALL BE BEYOND WALL FINISH OR STUCCO.
8. ALL FRAME ANCHORS SECURING WINDOW/DOOR FRAME TO PRESSURE TREATED BUCKS OR WOOD FRAMING SHALL BE CAPABLE OF RESISTING CORROSION CAUSED BY THE PRESSURE TREATING CHEMICALS IN THE WOOD.
9. MATERIALS, INCLUDING BUT NOT LIMITED TO STEEL SCREWS, THAT COME INTO CONTACT WITH OTHER DISSIMILAR MATERIALS SHALL MEET THE REQUIREMENTS OF 2004 & 2007 FLORIDA BUILDING CODE SECTION 2003.8.4.
10. DETERMINE THE POSITIVE & NEGATIVE DESIGN LOADS TO USE WHEN REFERENCING THESE DOCUMENTS IN ACCORDANCE WITH THE GOVERNING CODE & GOVERNING WIND VELOCITY. FOR WIND LOAD CALCULATIONS IN ACCORDANCE WITH THE 2004 FLORIDA BUILDING CODE, A DIRECTIONALITY FACTOR OF Kd = 0.85 SHALL BE USED.
11. NO INCREASE IN ALLOWABLE STRESS HAS BEEN USED IN THE DESIGN OF THIS PRODUCT. WIND LOAD DURATION FACTOR Cd = 1.6 WAS USED FOR WOOD SCREW DESIGN.
12. ALL SUBSTRATE SHALL HAVE THE FOLLOWING MINIMUM REQUIREMENTS.
    a) ALL CONCRETE SUBSTRATE SHALL BE MIN. 3000 PSI.
    b) ALL WOOD SUBSTRATE SHALL BE MIN. G = 0.55 DENSITY.
    c) ALL METAL STUD SUBSTRATE SHALL BE MIN. 18 GA. Fy = 33 ksi.
    d) ALL STRUCTURAL STEEL SUBSTRATE SHALL BE MIN. 12 GA. Fy = 36 ksi.

CLIP FASTENER REQUIREMENTS TABLE				
OPENING TYPE (SUBSTRATE)	CLIP TO OPENING FASTENER TYPE	NO. FASTENERS PER CLIP INTO SUBSTRATE	MINIMUM EMBEDMENT	MINIMUM EDGE DIST.
WOOD	NO. 12 SMS SCREW	2	1 1/4"	1"
MIN. 18 GA. STUD	NO. 12 TEK SCREW	2	FULL	1/2"
MIN. 12 GA. STRUCTURAL STEEL	NO. 12 TEK SCREW	2	FULL	1/2"
CMU/CONCRETE	(1) 1/4" CONCRETE SCREW	2	1 1/4"	2"

(1) CONCRETE SCREWS SHALL BE ELCO OR ITW RAMSET/RED HEAD TAPCONS, HILTI KWIK-CON II OR POWERS RAWL TAPPER (HARDENED STEEL OR S.S.).

PRODUCT REVISED
as complying with the Florida Building Code
Acceptance No. 08-0225.06
Expiration Date NOV. 7, 2012
By Manuel Perez
Miami-Dade Product Control Division

DRAWN BY: W.R.M.	CHECKED BY: W.W.S.
PLOT: 1=16	DATE: 02/11/08

NO.	REVISION DESCRIPTION	BY	DATE

DRAWING TITLE
SERIES 810-I SMALL MISSILE IMPACT CASEMENT WINDOW

MANUFACTURER
EFCO CORPORATION
1000 COUNTY ROAD; P.O. BOX 609
MONETT, MO 65708-0609
800-221-4169

CONSULTANTS
W. W. SCHAEFER ENGINEERING & CONSULTING, P.A.
8895 N. MILITARY TRAIL; SUITE C-204
PALM BEACH GARDENS, FL 33410
PHONE: 561-775-4902 FAX: 561-775-4903

CERTIFICATION
FEB 20 2008
WARREN W. SCHAEFER, P.E.
P.E. NO. 44135

DRAWING NO. 1574 REV.

SHEET NO. 1 OF 5

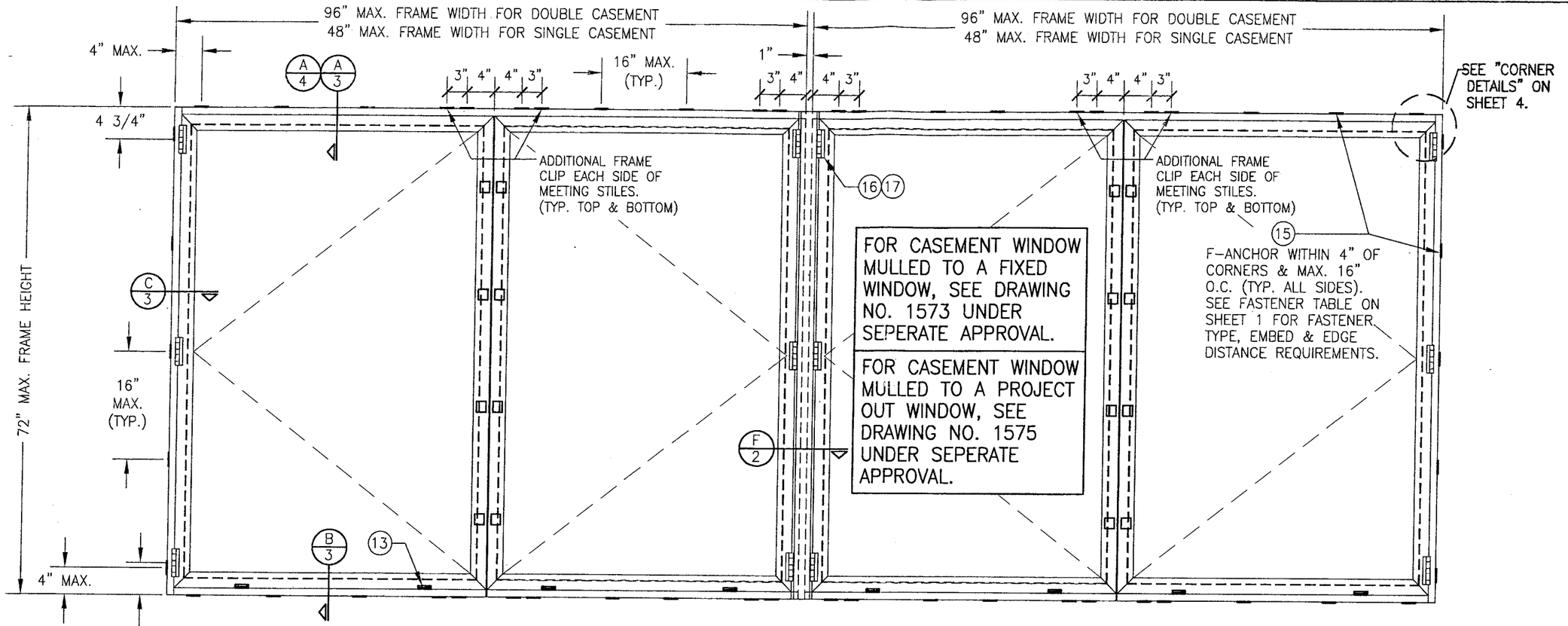

EXTERIOR ELEVATION
CASEMENT MULLED TO CASEMENT
(TYP. FOR DOUBLE & SINGLE CASEMENTS)
SCALE: 3/4"=1'-0"
MORE THAN 2 WINDOWS MAY BE STACKED HORIZONTALLY
(SEE OTHER ELEVATIONS ON SHEET 1 FOR DETAIL NOT SHOWN)

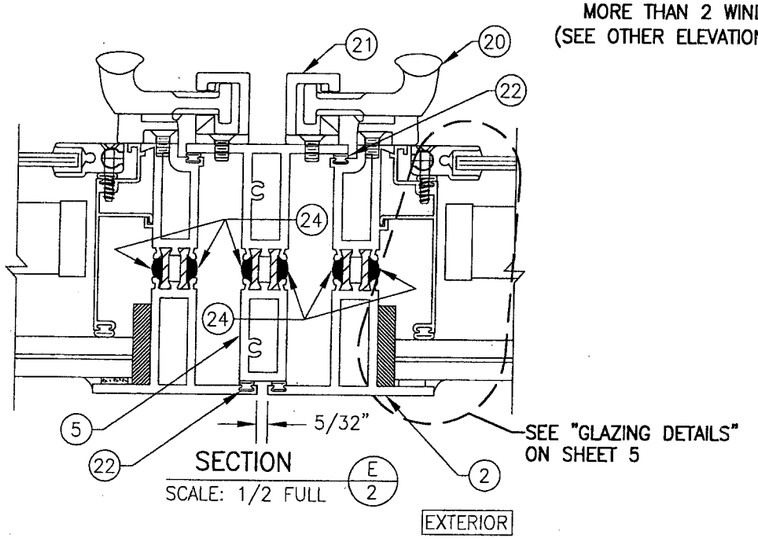

SECTION E/2
SCALE: 1/2 FULL

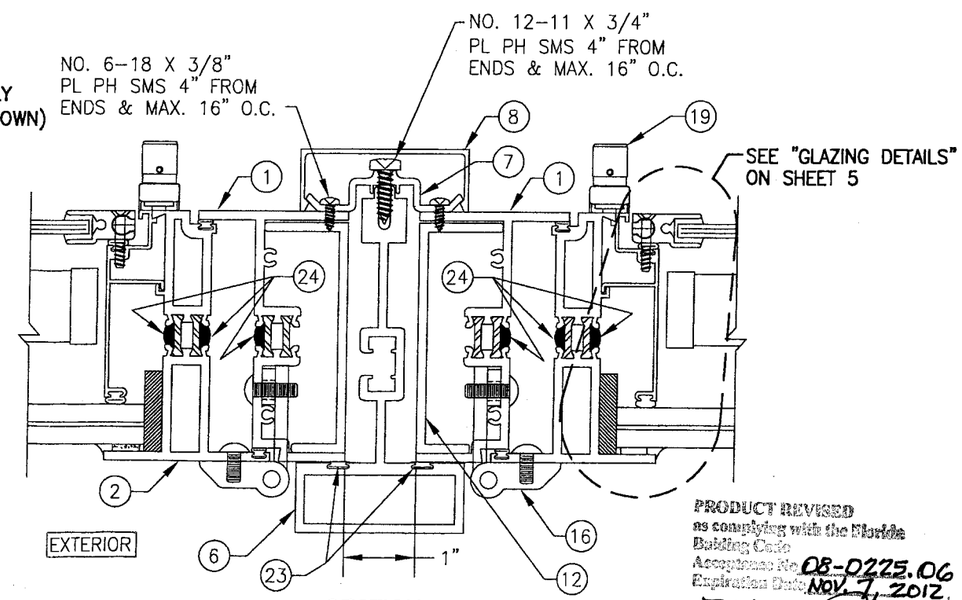

SECTION F/2
SCALE: 1/2 FULL

PRODUCT REVISED
as complying with the Florida Building Code
Acceptance No. 08-0225.06
Expiration Date: NOV. 7, 2012.
By Manuel Perez
Miami-Dade Product Control Division

DRAWN BY: W.R.M.	CHECKED BY: W.W.S.
PLOT: 1=16	DATE: 02/11/08

NO.	REVISION DESCRIPTION	BY	DATE

DRAWING TITLE
SERIES 810-I SMALL MISSILE IMPACT CASEMENT WINDOW

MANUFACTURER
EFCO CORPORATION
1000 COUNTY ROAD; P.O. BOX 609
MONETT, MO 65708-0609
800-221-4169

CONSULTANTS
W. W. SCHAEFER ENGINEERING & CONSULTING, P.A.
8895 N. MILITARY TRAIL; SUITE C-204
PALM BEACH GARDENS, FL 33410
PHONE: 561-775-4902 FAX: 561-775-4903

CERTIFICATION
FEB 20 2008
WARREN W. SCHAEFER, P.E.
P.E. NO. 44135

DRAWING NO. 1574
REV.
SHEET NO. 2 OF 5

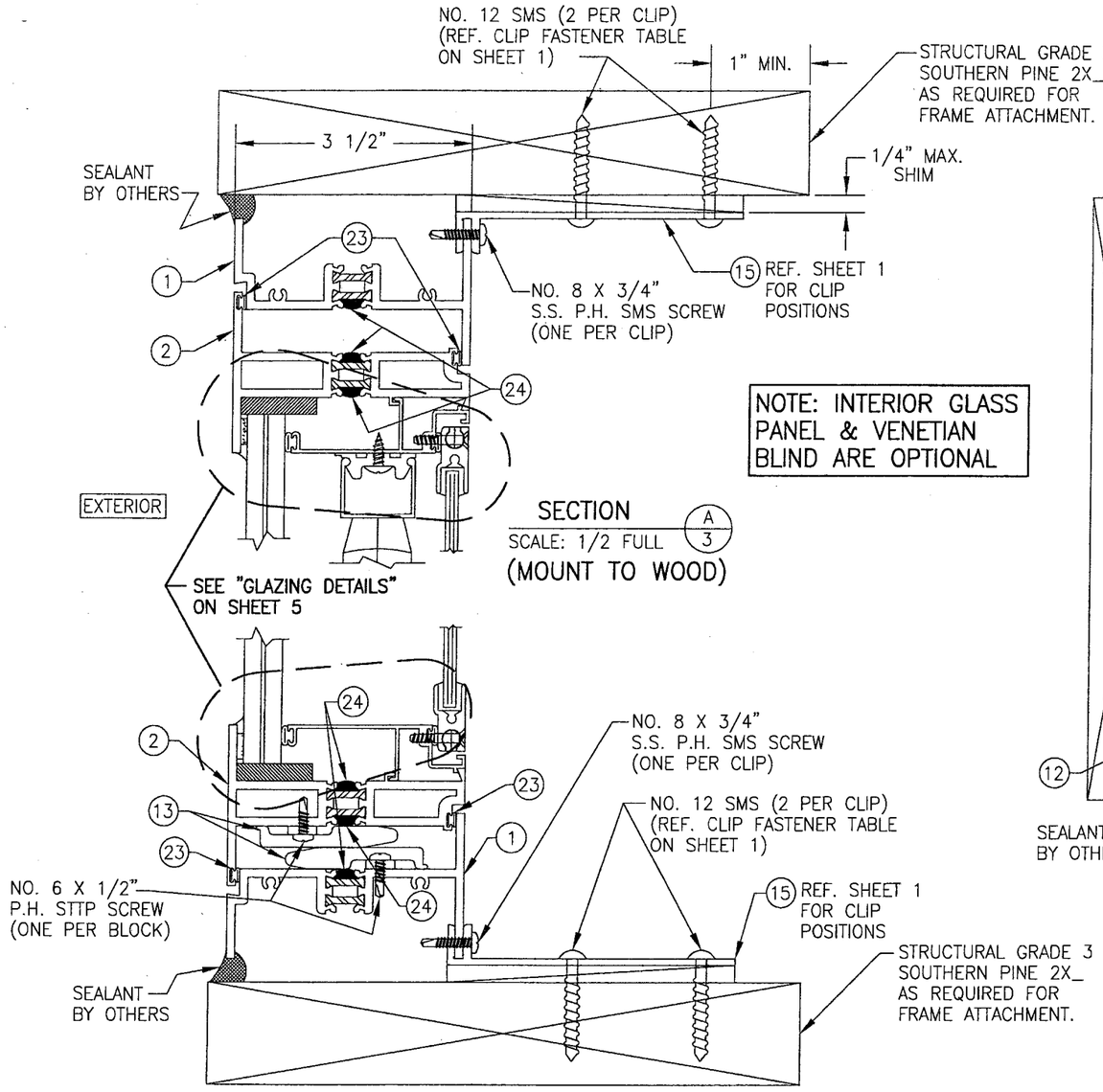

NOTE: INTERIOR GLASS PANEL & VENETIAN BLIND ARE OPTIONAL

SECTION A/3
SCALE: 1/2 FULL
(MOUNT TO WOOD)

SECTION B/3
SCALE: 1/2 FULL
(MOUNT TO WOOD)

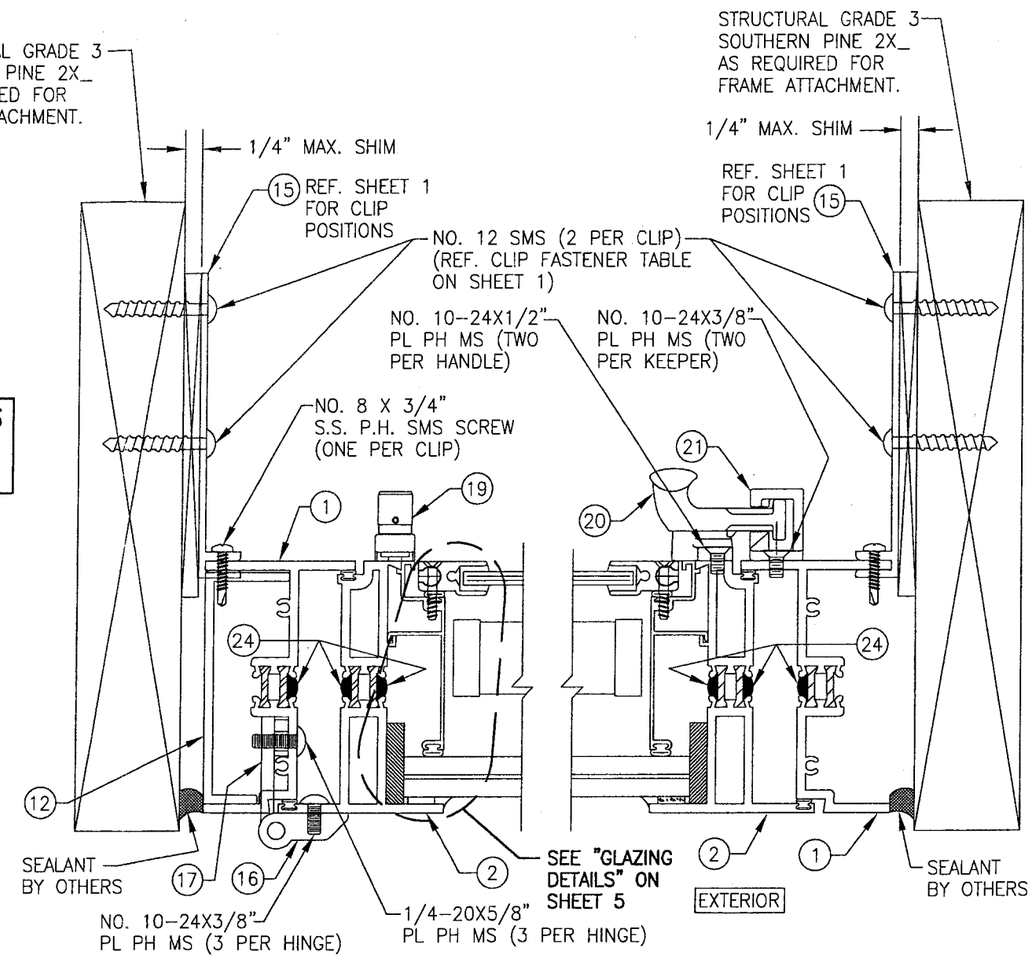

SECTION C/3
SCALE: 1/2 FULL
(MOUNT TO WOOD)

SECTION D/3
SCALE: 1/2 FULL
(MOUNT TO WOOD)

PRODUCT REVISED
as complying with the Florida
Building Code
Acceptance No. 08-0225.06
Expiration Date NOV 7, 2012
By Manuel Perez
Miami-Dade Product Control
Division

DRAWN BY: W.R.M.	CHECKED BY: W.W.S.
PLOT: 1=2	DATE: 02/11/08

NO.	REVISION DESCRIPTION	BY	DATE

DRAWING TITLE
SERIES 810-I SMALL MISSILE IMPACT CASEMENT WINDOW

MANUFACTURER
EFCO CORPORATION
1000 COUNTY ROAD; P.O. BOX 609
MONETT, MO 65708-0609
800-221-4169

CONSULTANTS
W. W. SCHAEFER ENGINEERING & CONSULTING, P.A.
8895 N. MILITARY TRAIL; SUITE C-204
PALM BEACH GARDENS, FL 33410
PHONE: 561-775-4902 FAX: 561-775-4903

CERTIFICATION
FEB 20 2008
WARREN W. SCHAEFER, P.E.
P.E. NO. 44135

DRAWING NO. 1574
REV.
SHEET NO. 3 OF 5

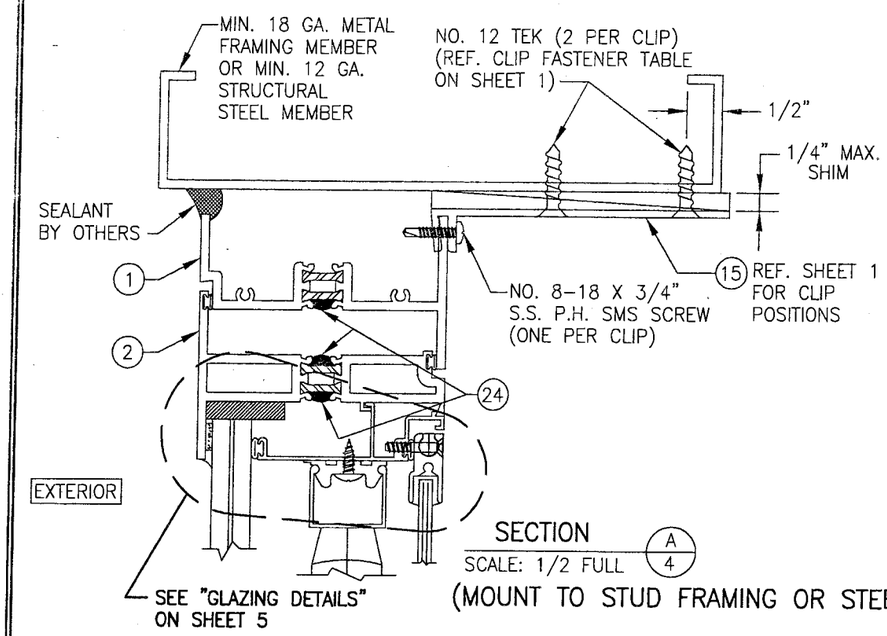

SECTION A/4
SCALE: 1/2 FULL
(MOUNT TO STUD FRAMING OR STEEL)

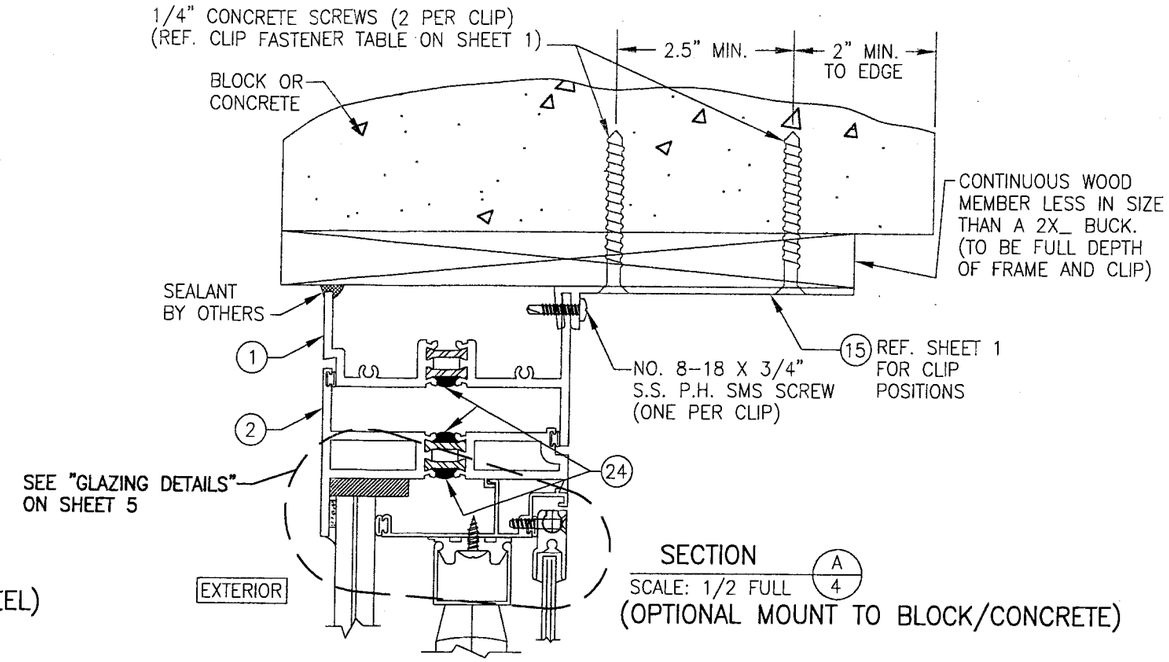

SECTION A/4
SCALE: 1/2 FULL
(OPTIONAL MOUNT TO BLOCK/CONCRETE)

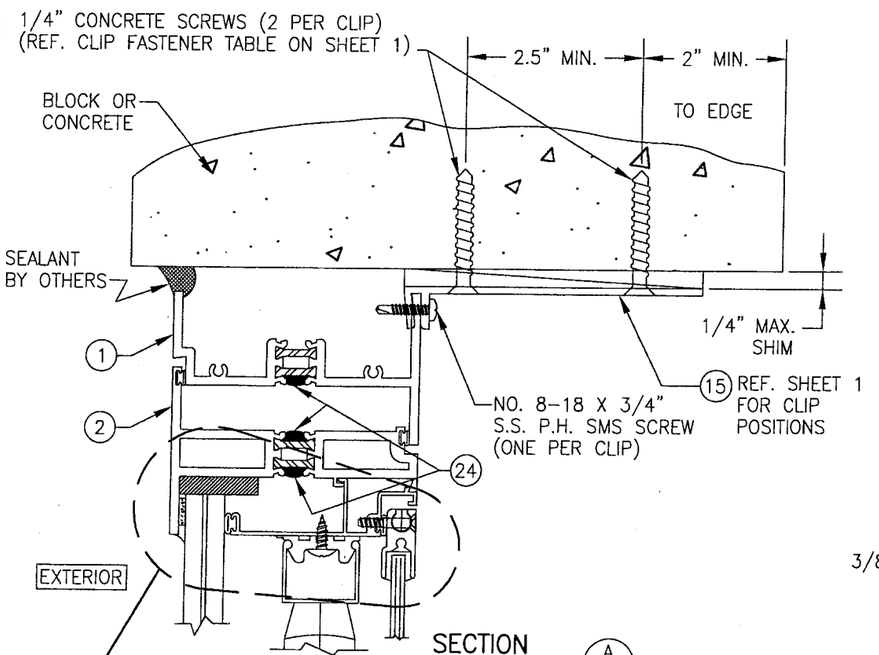

SECTION A/4
SCALE: 1/2 FULL
(MOUNT TO BLOCK/CONCRETE)

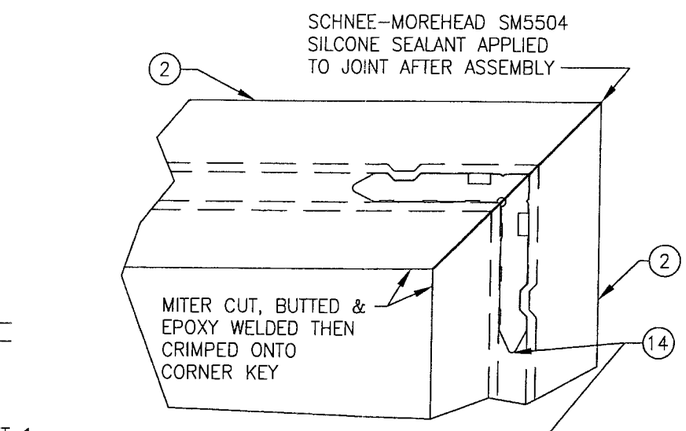

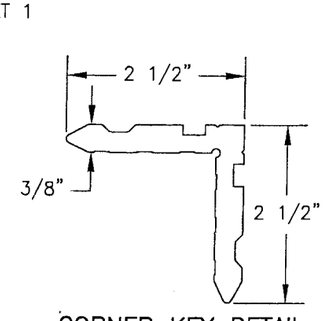

CORNER KEY DETAIL

SASH CORNER DETAIL
OUTSIDE VIEW

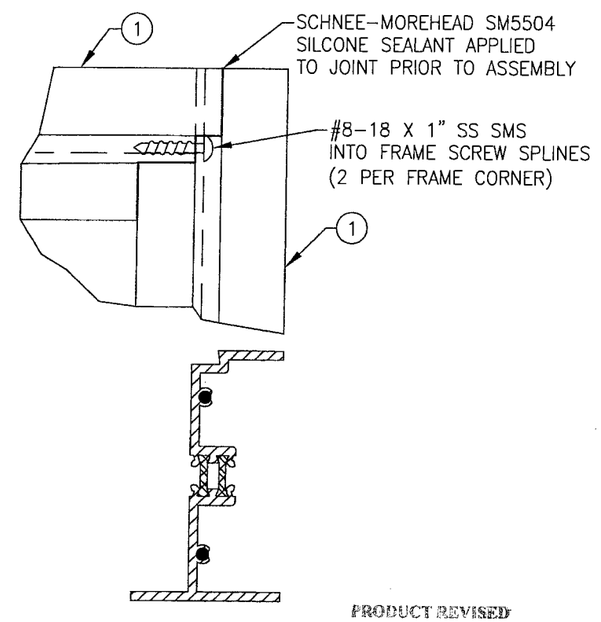

FRAME CORNER DETAIL
OUTSIDE VIEW

PRODUCT REVISED
as complying with the Florida Building Code
Acceptance No. 08-0225.06
Expiration Date: Nov. 7, 2012
By: Manuel Perez
Miami-Dade Product Control Division

DRAWN BY: W.R.M.	CHECKED BY: W.W.S.
PLOT: 1=2	DATE: 02/11/08

NO.	REVISION DESCRIPTION	BY	DATE

DRAWING TITLE
SERIES 810-I SMALL MISSILE IMPACT CASEMENT WINDOW

MANUFACTURER
EFCO CORPORATION
1000 COUNTY ROAD; P.O. BOX 609
MONETT, MO 65708-0609
800-221-4169

CONSULTANTS
W. W. SCHAEFER ENGINEERING & CONSULTING, P.A.
8895 N. MILITARY TRAIL; SUITE C-204
PALM BEACH GARDENS, FL 33410
PHONE: 561-775-4902 FAX: 561-775-4903

CERTIFICATION
FEB 20 2008
WARREN W. SCHAEFER, P.E.
P.E. NO. 44135

DRAWING NO. 1574
REV.
SHEET NO. 4 OF 5

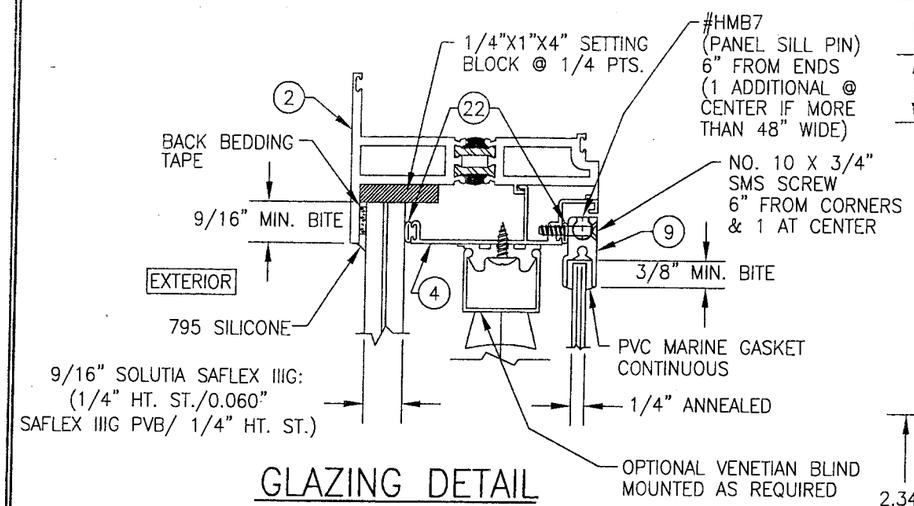

GLAZING DETAIL

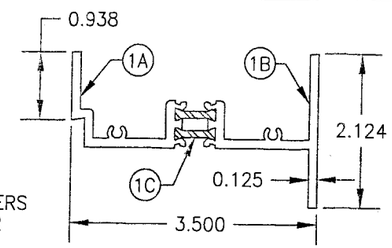

1 CASEMENT WINDOW FRAME ASSEMBLY

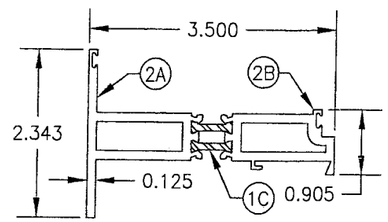

2 CASEMENT WINDOW SASH ASSEMBLY

ITEM #	PART	ITEM DESCRIPTION	MANUFACTURER/NOTES
		PARTS	
1A	8019	FRAME EXTERIOR MEMBER	EFCO; 6063–T6 ALUMINUM
1B	8020	FRAME INTERIOR MEMBER	EFCO; 6063–T6 ALUMINUM
1C	LAA3	INSULBAR STRUT	ENSINGER PLASTICS
2A	8504	SASH EXTERIOR MEMBER	EFCO; 6063–T6 ALUMINUM
2B	8503	SASH INTERIOR MEMBER	EFCO; 6063–T6 ALUMINUM
4	2097	INT. GLAZING STOP	EFCO; 6063–T6 ALUMINUM
5A	8258	MEETING RAIL INTERIOR MEMBER	EFCO; 6063–T6 ALUMINUM
5B	8261	MEETING RAIL EXTERIOR MEMBER	EFCO; 6063–T6 ALUMINUM
6	1303	MULLION	EFCO; 6063–T6 ALUMINUM
7	EG78	MULLION CLIP	EFCO; 6063–T6 ALUMINUM
8	EG79	MULLION COVER	EFCO; 6063–T6 ALUMINUM
9	ER65	INTERNAL PANEL FRAME (OPTIONAL)	EFCO; 6063–T6 ALUMINUM
10	HMB7	INTERNAL PANEL SCREW RETAINER	EFCO; 6063–T6 ALUMINUM
11	LB00	GLAZING CAP	EFCO; RIGID VINYL
12	8888	HINGE SUPPORT	EFCO; 6063–T6 ALUMINUM
13	HB47	LIFT BLOCK	EFCO; NYLON
14	2878	CORNER KEY	EFCO; 6063–T6 ALUMINUM
15	1880	F–ANCHOR	EFCO; 6063–T6 ALUMINUM
		HARDWARE	
16	2933	HINGE (SASH SIDE)	EFCO; 6063–T6 ALUMINUM
17	2935	HINGE (FRAME SIDE)	EFCO; 6063–T6 ALUMINUM
18	HA15	HINGE SHIM	EFCO; 6063–T6 ALUMINUM
19	5005/5006	VENITIAN BLIND TILT KNOB (OPTIONAL)	EFCO; 6063–T6 ALUMINUM
20	HU41/HU42	CAM HANDLE	BRONZE CRAFT (MANGANESE ALLOY)
21	HK10	CAM HANDLE KEEPER	BRONZE CRAFT (MANGANESE ALLOY)
		SEALS & SEALANTS	
22	WVB4	CONT. VINYL BULB SEAL	65 DUROMETER
23	WA04	CONT. VINYL BULB SEAL	73 DUROMETER
24	–	INSULBAR SEALANT (CONTINUOUS)	COLORED DOW 795

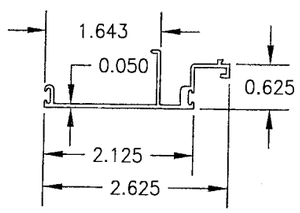

4 INTERIOR GLAZING STOP

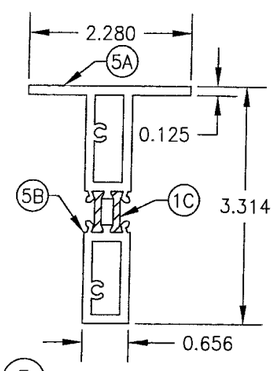

5 MEETING RAIL

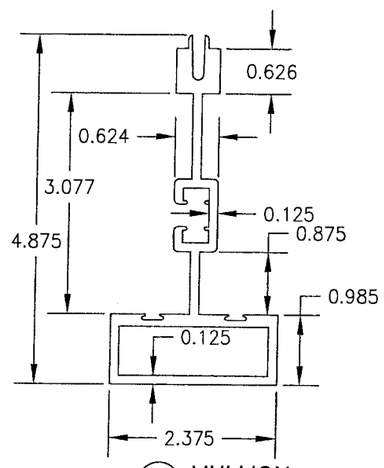

6 MULLION

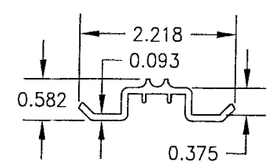

7 MULLION CLIP

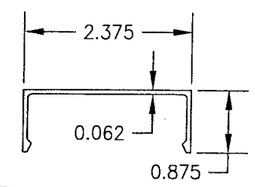

8 MULLION COVER

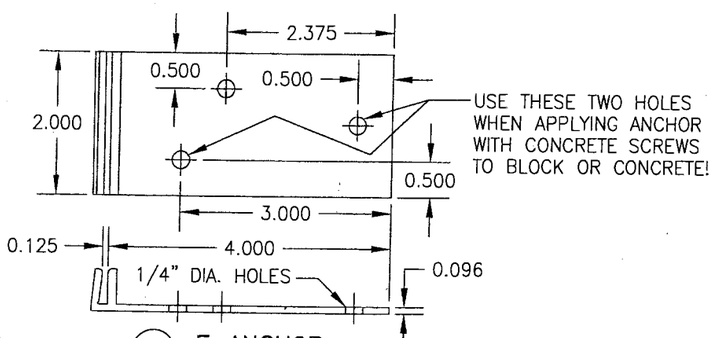

15 F–ANCHOR

PRODUCT REVISED
in compliance with the Florida
08-0225.06
NOV 2012

DRAWN BY: W.R.M.	CHECKED BY: W.W.S.
PLOT: 1=2	DATE: 02/11/08

NO.	REVISION DESCRIPTION	BY	DATE

DRAWING TITLE
SERIES 810–I SMALL MISSILE IMPACT CASEMENT WINDOW

MANUFACTURER
EFCO CORPORATION
1000 COUNTY ROAD; P.O. BOX 609
MONETT, MO 65708–0609
800–221–4169

CONSULTANTS
W. W. SCHAEFER ENGINEERING & CONSULTING, P.A.
8895 N. MILITARY TRAIL; SUITE C–204
PALM BEACH GARDENS, FL 33410
PHONE: 561–775–4902 FAX: 561–775–4903

CERTIFICATION
FEB 20 2008
WARREN W. SCHAEFER, P.E.
P.E. NO. 44135

DRAWING NO. 1574
REV.
SHEET NO. 5 OF 5