MIAMI-DADE

BUILDING CODE COMPLIANCE OFFICE (BCCO)
PRODUCT CONTROL DIVISION

MIAMI-DADE COUNTY, FLORIDA
METRO-DADE FLAGLER BUILDING
140 WEST FLAGLER STREET, SUITE 1603
MIAMI, FLORIDA 33130-1563
(305) 375-2901 FAX (305) 375-2908

NOTICE OF ACCEPTANCE (NOA)

Southeastern Metals Manufacturing Corporation
11801 Industry Drive
Jacksonville, FL 32218

SCOPE:

This NOA is being issued under the applicable rules and regulations governing the use of construction materials. The documentation submitted has been reviewed by Miami-Dade County Product Control Division and accepted by the Board of Rules and Appeals (BORA) to be used in Miami Dade County and other areas where allowed by the Authority Having Jurisdiction (AHJ).

This NOA shall not be valid after the expiration date stated below. The Miami-Dade County Product Control Division (In Miami Dade County) and/or the AHJ (in areas other than Miami Dade County) reserve the right to have this product or material tested for quality assurance purposes. If this product or material fails to perform in the accepted manner, the manufacturer will incur the expense of such testing and the AHJ may immediately revoke, modify, or suspend the use of such product or material within their jurisdiction. BORA reserves the right to revoke this acceptance, if it is determined by Miami-Dade County Product Control Division that this product or material fails to meet the requirements of the applicable building code.

This product is approved as described herein, and has been designed to comply with the Florida Building Code including the High Velocity Hurricane Zone of the Florida Building Code.

DESCRIPTION: SEM-Lok Snap Lok Standing Seam Metal Roof Panels

LABELING: Each unit shall bear a permanent label with the manufacturer's name or logo, city, state and following statement: "Miami-Dade County Product Control Approved", unless otherwise noted herein.

RENEWAL of this NOA shall be considered after a renewal application has been filed and there has been no change in the applicable building code negatively affecting the performance of this product.

TERMINATION of this NOA will occur after the expiration date or if there has been a revision or change in the materials, use, and/or manufacture of the product or process. Misuse of this NOA as an endorsement of any product, for sales, advertising or any other purposes shall automatically terminate this NOA. Failure to comply with any section of this NOA shall be cause for termination and removal of NOA.

ADVERTISEMENT: The NOA number preceded by the words Miami-Dade County, Florida, and followed by the expiration date may be displayed in advertising literature. If any portion of the NOA is displayed, then it shall be done in its entirety.

INSPECTION: A copy of this entire NOA shall be provided to the user by the manufacturer or its distributors and shall be available for inspection at the job site at the request of the Building Official.

This revises NOA 07-0815.07 and consists of pages 1 through 6.
The submitted documentation was reviewed by Alex Tigera.

MIAMI-DADE COUNTY APPROVED

ROOFING SYSTEM APPROVAL:

Category:	Roofing
Sub-Category:	Metal, Panels(Non-Structural)
Material:	Steel
Deck Type:	Wood
Maximum Design Pressure	**-106.75 psf**

TRADE NAMES OF PRODUCTS MANUFACTURED OR LABELED BY APPLICANT:

Product	Dimensions	Test Specifications	Product Description
"SEM-Lok Snap-Lok Standing Seam"	l = various w = 16" min. 0.0217" thick	TAS 110 & TAS 125	Corrosion resistant, galvanized, preformed, standing seam, coated, prefinished, metal panels.
"SEM-Lok Snap-Lok Standing Seam" CXT	l = various w = 16" min. 0.016" thick	TAS 110 & TAS 125	CXT (Copper Clad Stainless Steel) prefinished, metal panels.
SEM-Lok Cleat	L = various W = 1-3/8" H = 1"	TAS 125	Preformed, galvalume, metal cleat
Trim Pieces	l = varies w = varies min. 0.0217" thick	TAS 110	Standard flashing and trim pieces. Manufactured for each panel width.

EVIDENCE SUBMITTED

Test Agency	Test Identifier	Test Name/Report	Date
Hurricane Test Laboratories, Inc.	0041-0703-98	UL –580 test TAS 125	07/10/98
Hurricane Test Laboratories, Inc.	0041-0812-07	TAS 125	11/26/07 09/14/07
Hurricane Test Laboratories, Inc.	0041-0807-07	TAS 125	07/21/07
Force Engineering & Testing, Inc.	188-0332T-06A	TAS-125	08/27/07
Force Engineering & Testing, Inc.	188-0332T-06B	TAS-125	08/27/07
Celotex Corporation Testing Services	520504	TAS 100	12/21/99

APPROVED ASSEMBLIES

SYSTEM A-1: "Sem-Lok Snap-Lok Standing Seam" 26 ga. Metal Panels

Deck Type: Wood, Non-insulated

Deck Description: $^{19}/_{32}$" or greater plywood or wood plank.

Slope Range: 2":12" or greater

Maximum Uplift Pressure: See Table A Below

Deck Attachment: In accordance with applicable Building Code, but in no case shall it be less than #8d galvanized ring shank common nails spaced 6" o.c around the perimeter and in the field.. In reroofing, where the deck is less than $^{19}/_{32}$" thick (Minimum $^{15}/_{32}$") The above attachment method must be in addition to existing attachment.

Underlayment: Minimum underlayment shall be an ASTM D 226 Type II installed with a minimum 4" side-lap and 6" end-laps. Underlayment shall be fastened with corrosion resistant tin-caps and 12 gauge 1 ¼" annular ring-shank nails, spaced 6" o.c. at all laps and two staggered rows 12" o.c. in the field of the roll. Or, any approved underlayment having a current NOA.

Valleys: Valley construction shall be in compliance with Roofing Application Standard RAS 133 and with Southeastern Metal Manufacturing Company's current published installation instructions.

Fire Barrier Board: Any approved fire barrier having a current NOA. Or for class A or B fire rating, install minimum ¼" thick Georgia Pacific "Dens Deck" (with current NOA) or minimum 4mm thick of Tritex, RockRoof (with current NOA) or $^{5}/_{8}$" water resistant type X gypsum sheathing with treated core and facer.

Metal Panels and Accessories: Install the "SEM-Lok Panels" and accessories in compliance with Southeastern Metal Manufacturing Company's current, published installation instructions and details. Flashing, penetrations, valley construction and other details shall be constructed in compliance with the minimum requirements provided in Roofing Application Standards RAS 133.

"SEM-Lok Panels" shall be installed through the prefabricated panel slot openings with a minimum #10 pancake wood screws of sufficient length (but not less than 1") to penetrate through the sheathing a minimum of $^{3}/_{16}$ of an inch. Fasteners shall be spaced a maximum of 7" o.c. When using "cleat", place cleat over male rib before securing the panel with screws. See **Detail A** herein.

Table A
Maximum Design Pressure

	Field	Perimeter and Corner[1]
Maximum Design Pressure	**-52.5 psf.**	**-106.75 psf**
	Without Cleat	**With Cleat**

1. Extrapolation shall not be allowed

SYSTEM A-2:	"Sem-Lok Snap-Lok Standing Seam" CXT Metal Panels
Deck Type:	Wood, Non-insulated
Deck Description:	$^{19}/_{32}$" or greater plywood or wood plank.
Slope Range:	2":12" or greater
Maximum Uplift Pressure:	See Table B Below

Deck Attachment: In accordance with applicable Building Code, but in no case shall it be less than #8d galvanized ring shank common nails spaced 6" o.c around the perimeter and in the field.. In reroofing, where the deck is less than $^{19}/_{32}$" thick (Minimum $^{15}/_{32}$") The above attachment method must be in addition to existing attachment.

Underlayment: Minimum underlayment shall be an ASTM D 226 Type II installed with a minimum 4" side-lap and 6" end-laps. Underlayment shall be fastened with corrosion resistant tin-caps and 12 gauge 1 ¼" annular ring-shank nails, spaced 6" o.c. at all laps and two staggered rows 12" o.c. in the field of the roll. Or, any approved underlayment having a current NOA.

Valleys: Valley construction shall be in compliance with Roofing Application Standard RAS 133 and with Southeastern Metal Manufacturing Company's current published installation instructions.

Fire Barrier Board: Any approved fire barrier having a current NOA. Or for class A or B fire rating, install minimum ¼" thick Georgia Pacific "Dens Deck" (with current NOA) or minimum 4mm thick of Tritex, RockRoof (with current NOA) or $^{5}/_{8}$" water resistant type X gypsum sheathing with treated core and facer.

Metal Panels and Accessories: Install the "SEM-Lok CXT Panels" and accessories in compliance with Southeastern Metal Manufacturing Company's current, published installation instructions and details. Flashing, penetrations, valley construction and other details shall be constructed in compliance with the minimum requirements provided in Roofing Application Standards RAS 133.

"SEM-Lok CXT Panels" shall be installed through the prefabricated panel slot openings with a minimum size fastener listed below of sufficient length (but not less than 1") to penetrate through the sheathing a minimum of $^{3}/_{16}$ of an inch. Fasteners shall be spaced a maximum as listed below in Table B. Place "cleat" over male rib before securing the panel with screws. See **Detail A** herein.

Table B
Maximum Design Pressure

	Field	**Perimeter and Corner[1]**
Maximum Design Pressure	**-76.75 psf.**	**-91.75 psf**
Fastener Type	**#10 Pancake Head screws**	**#9 roofing screws**
Maximum Fastener Spacing	**7" o.c.**	**8" o.c.**

1. Extrapolation shall not be allowed

SYSTEM LIMITATIONS

1 The maximum designed pressure listed herein shall be applicable to all roof pressure zones (i.e. field, perimeters, and corners). Neither rational analysis, nor extrapolation shall be permitted for enhanced fastening at enhanced pressure zones (i.e. perimeters, extended corners and corners).

2. Panels may be rolls formed in continuous lengths from eave to ridge. Maximum lengths shall be as described in Roofing Application Standard RAS 133

3. All panels shall be permanently labeled with the manufacturer's name and/or logo, and the following statement: "Miami-Dade County Product Control Approved" **or** with the Miami-Dade County Product Control Seal as seen below. All clips shall be permanently labeled with the manufacturer's name and/or logo, and/or model.

MIAMI-DADE COUNTY
APPROVED

4. Fire classification is not part of this acceptance; refer to a current Approved Roofing Materials Directory for fire ratings of this product.

5. All products listed herein shall have a quality assurance audit in accordance with the Florida Building Code and Rule 9B-72 of the Florida Administrative Code.

PROFILE DRAWINGS

"SEM-LOK SNAP LOK STANDING SEAM" AND "SEM-LOK SNAP LOK STANDING SEAM" CXT METAL ROOF PANELS

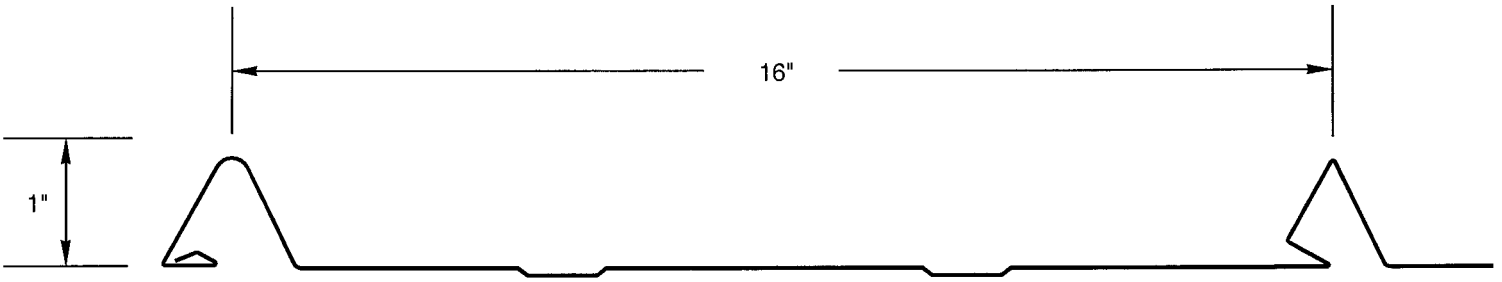

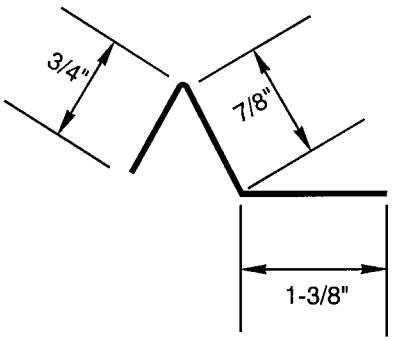

CLEAT DETAIL

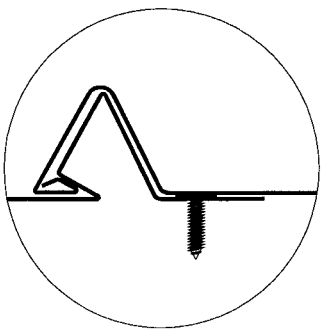

WITHOUT CLEAT

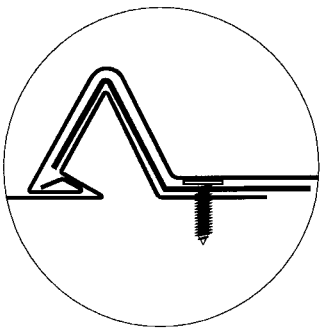

WITH CLEAT

END OF THIS ACCEPTANCE