MIAMI-DADE

BUILDING CODE COMPLIANCE OFFICE (BCCO)
PRODUCT CONTROL DIVISION

MIAMI-DADE COUNTY, FLORIDA
METRO-DADE FLAGLER BUILDING
140 WEST FLAGLER STREET, SUITE 1603
MIAMI, FLORIDA 33130-1563
(305) 375-2901 FAX (305) 375-2908

NOTICE OF ACCEPTANCE (NOA)

Carlisle Syntec Inc.
P.O. Box 7000
Carlisle, PA 17013

SCOPE:
This NOA is being issued under the applicable rules and regulations governing the use of construction materials. The documentation submitted has been reviewed by Miami-Dade County Product Control Division and accepted by the Board of Rules and Appeals (BORA) to be used in Miami Dade County and other areas where allowed by the Authority Having Jurisdiction (AHJ).

This NOA shall not be valid after the expiration date stated below. The Miami-Dade County Product Control Division (In Miami Dade County) and/or the AHJ (in areas other than Miami Dade County) reserve the right to have this product or material tested for quality assurance purposes. If this product or material fails to perform in the accepted manner, the manufacturer will incur the expense of such testing and the AHJ may immediately revoke, modify, or suspend the use of such product or material within their jurisdiction. BORA reserves the right to revoke this acceptance, if it is determined by Miami-Dade County Product Control Division that this product or material fails to meet the requirements of the applicable building code.

This product is approved as described herein, and has been designed to comply with the Florida Building Code and the High Velocity Hurricane Zone of the Florida Building Code.

DESCRIPTION: SecurEdge Roof Edge Termination Systems

LABELING: Each unit shall bear a permanent label with the manufacturer's name or logo, city, state and following statement: "Miami-Dade County Product Control Approved", unless otherwise noted herein.

RENEWAL of this NOA shall be considered after a renewal application has been filed and there has been no change in the applicable building code negatively affecting the performance of this product.

TERMINATION of this NOA will occur after the expiration date or if there has been a revision or change in the materials, use, and/or manufacture of the product or process. Misuse of this NOA as an endorsement of any product, for sales, advertising or any other purposes shall automatically terminate this NOA. Failure to comply with any section of this NOA shall be cause for termination and removal of NOA.

ADVERTISEMENT: The NOA number preceded by the words Miami-Dade County, Florida, and followed by the expiration date may be displayed in advertising literature. If any portion of the NOA is displayed, then it shall be done in its entirety.

INSPECTION: A copy of this entire NOA shall be provided to the user by the manufacturer or its distributors and shall be available for inspection at the job site at the request of the Building Official.

This NOA consists of pages 1 through 7.
The submitted documentation was reviewed by Alex Tigera.

MIAMI-DADE COUNTY APPROVED

ROOFING COMPONENT APPROVAL

Category:	Roofing
Sub-Category:	Termination Components
Materials	Steel

SCOPE:

This approves "**SecurEdge Roof Edge Termination Systems**" as described in this Notice of Acceptance. Designed to comply with the Florida Building Code, High Velocity Hurricane Zone for the locations where the pressure requirements, as determined by applicable building code do not exceed the design pressure values listed herein.

Table 1

TRADE NAMES OF PRODUCTS MANUFACTURED OR LABELED BY APPLICANT:

Product Name	Dimensions	Test Specification	Product Description
SecurEdge Coping	Maximum length 10' 16" wide cap 6.0" face leg, 4.0" back leg	TAS 111 (C)	Decorative metal coping cap with galvanized steel anchor/support cleats
Extruded SecurEdge 3000	Maximum length 10' Maximum face width 6.75"	TAS 111 (B)	Decorative metal fascia with continuous extruded aluminum bar
Extruded SecurEdge 3000 Custom Sizes	Maximum length 10' Maximum face width 12.75"	TAS 111 (B)	Decorative metal fascia with continuous extruded aluminum bar with 24ga. galvanized steel extender
SecurEdge 3000	Maximum length 10'. Maximum face width 8.25"	TAS 111 (B)	Decorative metal fascia with continuous galvanized steel cleat.
SecurEdge 200	Maximum length 10'. Maximum face width 10.0"	TAS 111 (B)	Decorative metal fascia with continuous galvanized steel spring cleat.

INSTALLATION:

Product Name	Test Specification	Product Description
SecurEdge Coping	TAS 111 (C)	Decorative metal coping cap with galvanized steel anchor/support cleats

SecurEdge coping (parapet wall coping) – Maximum length 10'. 16" wide cap, 6.0" face leg, 4.0" back leg, 20ga. galvanized steel hold down cleat spaced 5'0" o.c. Installed with four 1.25" stainless steel hex head screws.
.050" aluminum coping cap – **Rated: Outward 80 psf Upward 137 psf**
24ga. galvanized steel coping cap - **Rated: Outward 60 psf Upward 72 psf**

Extruded SecurEdge 3000	TAS 111 (B)	Decorative metal fascia with continuous extruded aluminum bar

Extrude SecurEdge 3000 (edge flashing) - Maximum length 10'. Maximum face width 6.75". 0.070" in 6061-T6 extruded aluminum retainer bar with snap-on fascia cover. Installed with 1.25" stainless steel hex head screws 12" o.c.
.040" aluminum fascia – **Rated: 215 psf**
24ga galvanized steel fascia – **Rated: 218 psf**

Extruded SecurEdge 3000 Custom Sizes	TAS 111 (B)	Decorative metal fascia with continuous extruded aluminum bar with 24ga. galvanized steel extender

Extrude SecurEdge 3000 Custom Size (edge flashing) - Maximum length 10'. Maximum face width 12.75". 0.070" in 6061-T6 extruded aluminum retainer bar with a 24ga. galvanized steel extender clip and a snap-on fascia cover. Installed with 1.25" stainless steel hex head screws 12" o.c.
.040" aluminum fascia – **Rated: 128 psf**
24ga galvanized steel fascia – **Rated: 164 psf**

SecurEdge 3000	TAS 111 (B)	Decorative metal fascia with continuous galvanized steel cleat.

SecurEdge 3000 (edge flashing) - Maximum length 10'. Maximum face width 8.25". 20ga. galvanized steel cleat with snap-on fascia cover. Installed with 1.25" stainless steel hex head screws 12" o.c.
.040" aluminum fascia – **Rated: 205 psf**
24ga galvanized steel fascia – **Rated: 222 psf**

SecurEdge 200	TAS 111 (B)	Decorative metal fascia with continuous galvanized steel spring cleat.

SecurEdge 200 (roof edge) - Maximum length 10'. Maximum face width 10.0". 24ga. galvanized steel spring cleat with snap-on fascia cover. Installed with 1.5" ring shank nails 12" o.c.
.050" aluminum fascia – **Rated: 150 psf**
24ga galvanized steel fascia – **Rated: 130 psf**

LIMITATIONS:

1. All products listed herein shall be installed in accordance with the requirements set forth in RAS 111.
2. Maximum dimensions shall be as outlined in Detail Drawings herein.
3. All products listed herein shall be installed in conjunction with Carlisle Syntec Inc.'s required accessories including but not limited to: miters, splice caps, splice plates, corners, end caps, pier caps, etc.
4. Downspout scuppers and spill out scuppers shall be fabricated and installed in accordance with RAS 111.
5. If required, install water cut-off as recommended by the membrane manufacturer and under the anchor bar.
6. Contractor shall check as-built conditions and verify roof edge details for accuracy to fit as built conditions prior to installation. Installer shall comply with Carlisle Syntec Inc.'s published installation requirements.
7. Fasteners shall be Carlisle Syntec Inc.'s approved fasteners.
8. Fasteners shall provide a minimum pull out resistance of 240lbf (109 kg) into the substrate being fastened into. When tested in accordance with TAS 105.
9. No exposed fasteners shall be permitted.
10. All fasteners shall be of compatible materials
11. Finishes shall be natural aluminum mill finish, or pre-coated Kynar 500. All coatings shall be in compliance with the Florida Building Code (FBC).
12. The maximum design pressures listed here in are applicable to the perimeter areas of the roof. Increased design pressures for corner areas, in compliance with applicable building code may be met through rational analysis by increasing the number of attachment points in these areas. The maximum fastener spacing noted in the "Systems Description" section of this approval shall not be exceeded. All rational analysis computations shall be prepared, signed and sealed by a Florida Registered Professional Engineer, Registered Architect, or Registered Roof Consultant.
13. All products listed herein shall have a quality assurance audit in accordance with the Florida Building Code and Rule 9B-72 of the Florida Administrative Code.

SecurEdge Coping Detail

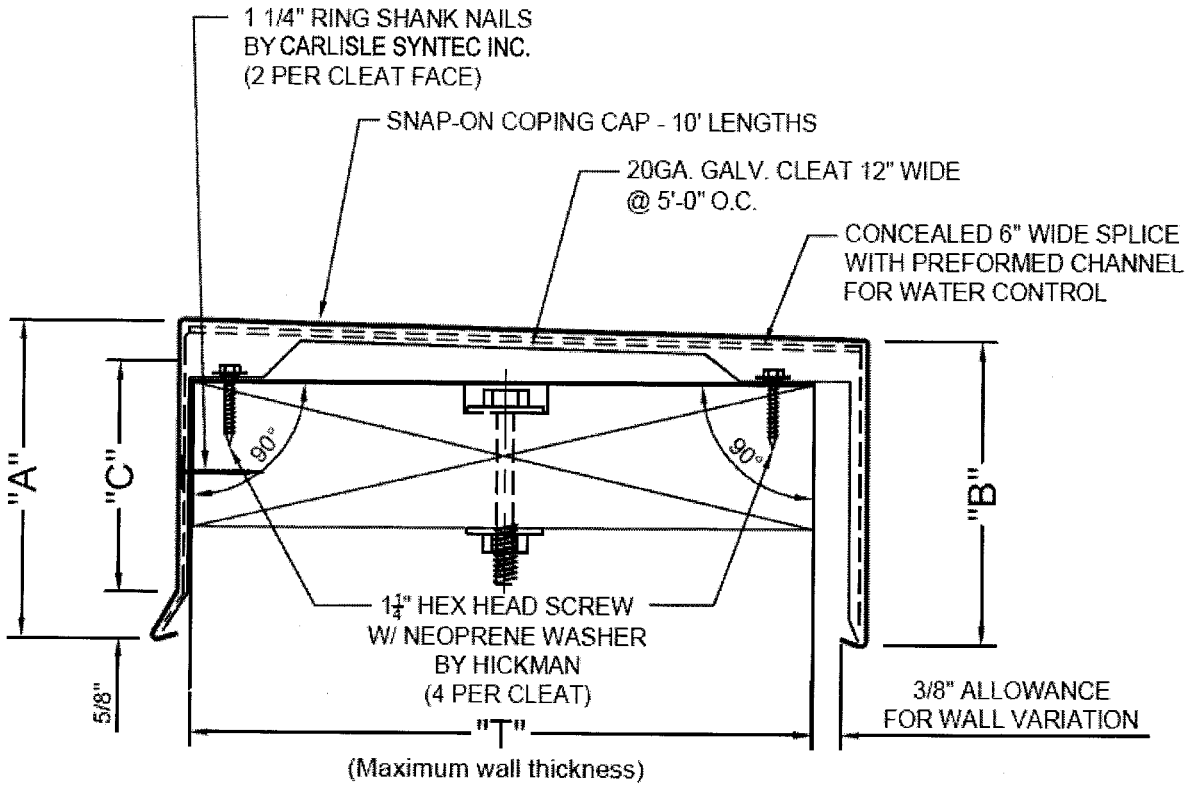

Extruded SecurEdge 3000 Detail

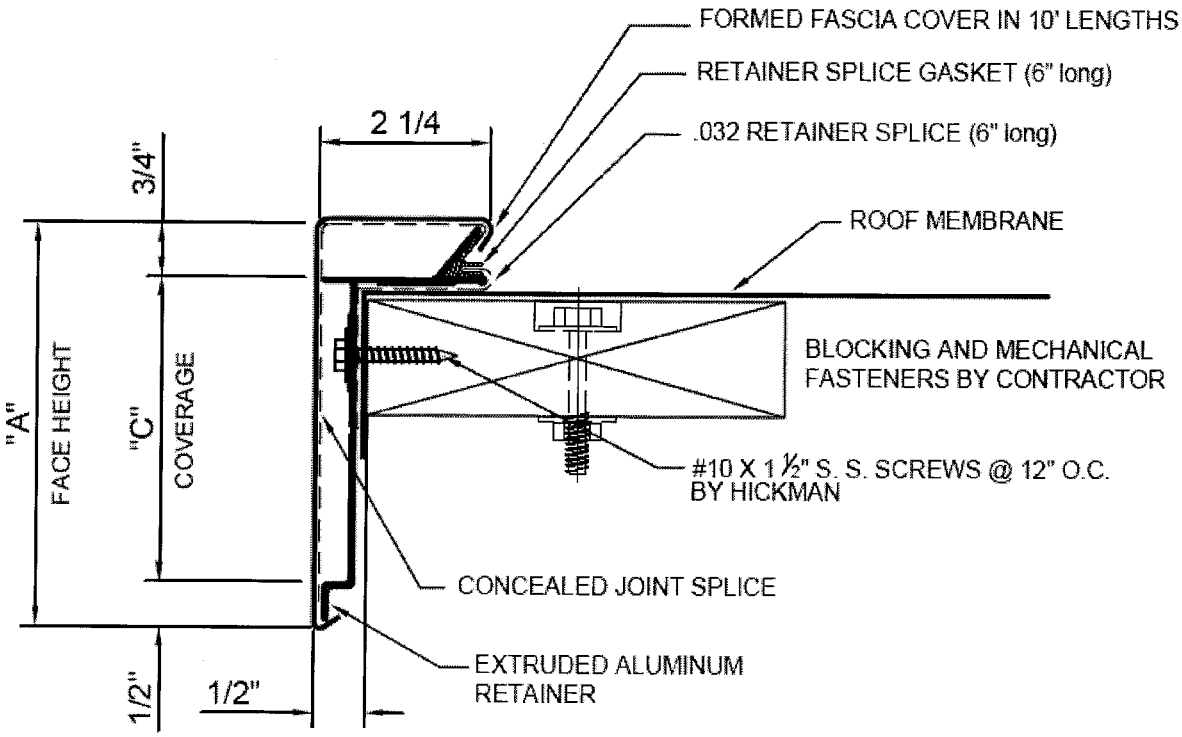

Note: Coordinate Installation with Membrane MFR.

Extruded SecurEdge 3000 Custom Detail

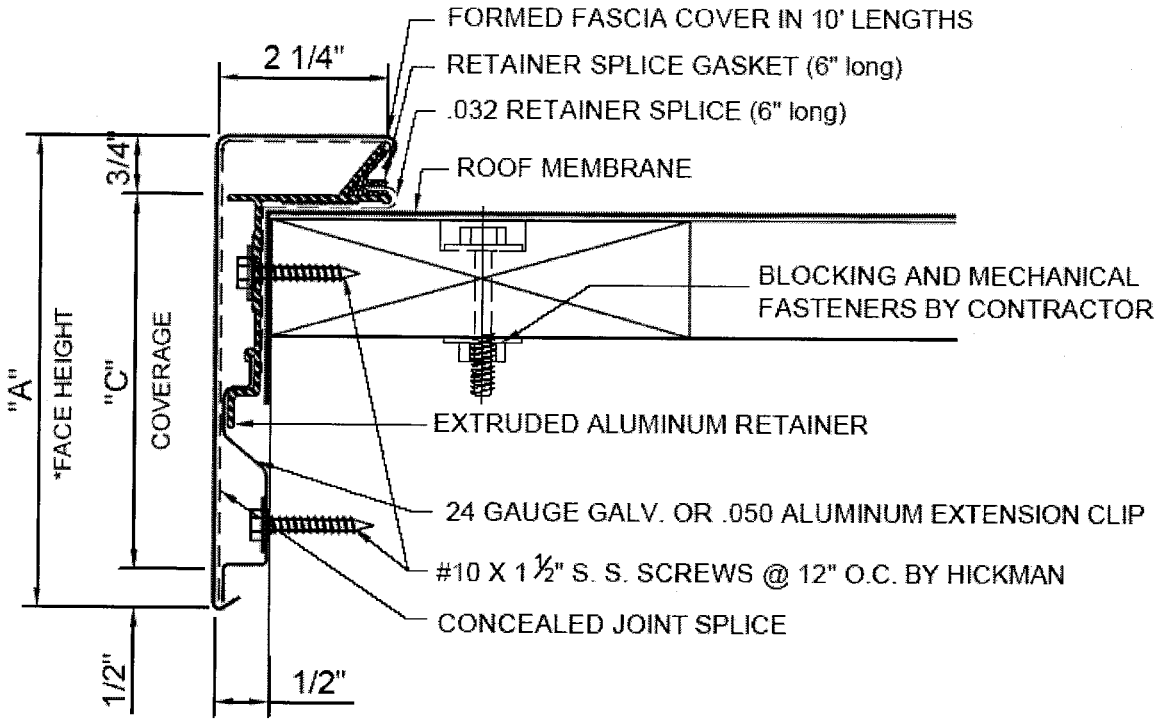

SecurEdge 3000 Detail

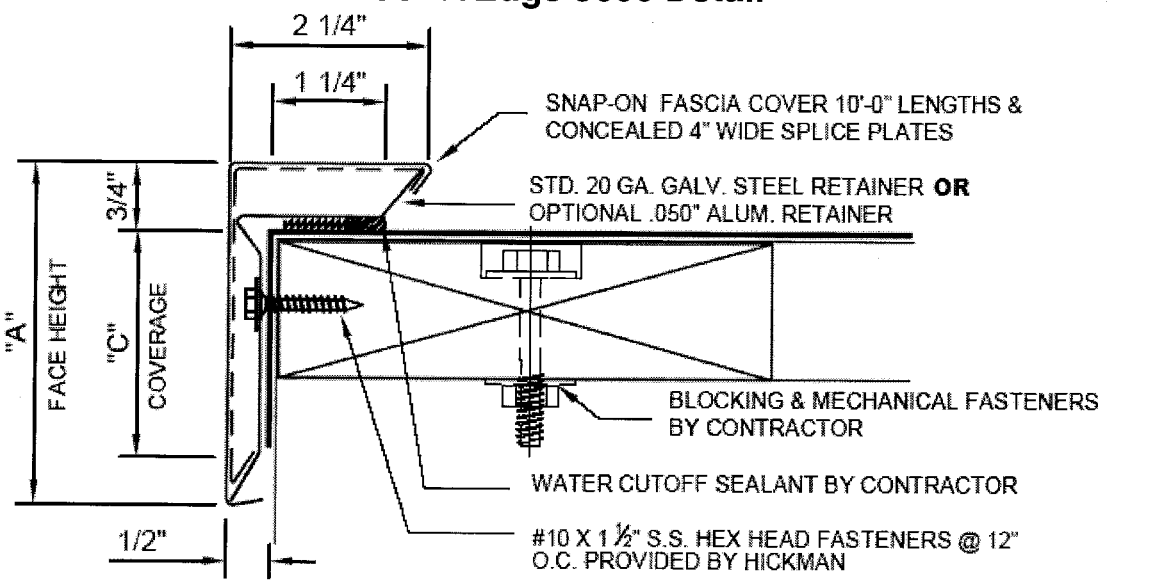

NOTE: SECOND ROW OF FASTENER HOLES PROVIDED FOR 6" FACE SIZE AND LARGER.

SecurEdge 200 Detail

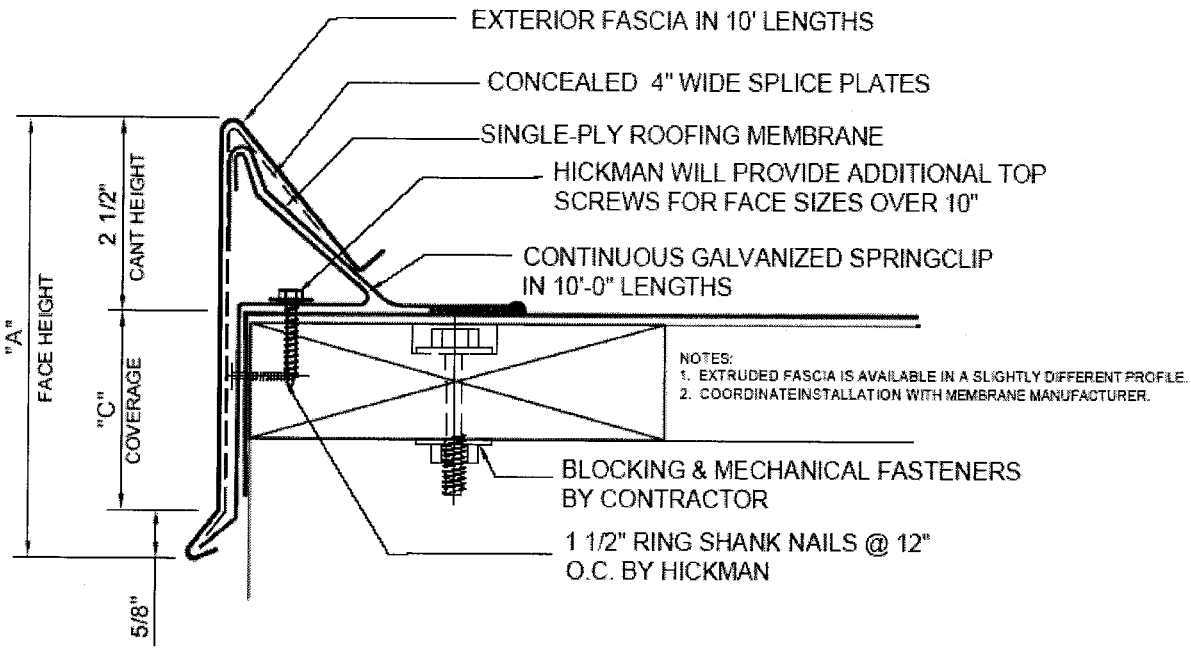

END OF THIS ACCEPTANCE