MIAMI-DADE COUNTY

BUILDING CODE COMPLIANCE OFFICE (BCCO)
PRODUCT CONTROL DIVISION

MIAMI-DADE COUNTY, FLORIDA
METRO-DADE FLAGLER BUILDING
140 WEST FLAGLER STREET, SUITE 1603
MIAMI, FLORIDA 33130-1563
(305) 375-2901 FAX (305) 375-2908
www.miamidade.gov/buildingcode

NOTICE OF ACCEPTANCE (NOA)

Kolbe & Kolbe Millwork Co., Inc.
1211 Depot Street
Manawa, WI 54949

SCOPE:

This NOA is being issued under the applicable rules and regulations governing the use of construction materials. The documentation submitted has been reviewed by Miami-Dade County Product Control Division and accepted by the Board of Rules and Appeals (BORA) to be used in Miami Dade County and other areas where allowed by the Authority Having Jurisdiction (AHJ).

This NOA shall not be valid after the expiration date stated below. The Miami-Dade County Product Control Division (In Miami Dade County) and/or the AHJ (in areas other than Miami Dade County) reserve the right to have this product or material tested for quality assurance purposes. If this product or material fails to perform in the accepted manner, the manufacturer will incur the expense of such testing and the AHJ may immediately revoke, modify, or suspend the use of such product or material within their jurisdiction. BORA reserves the right to revoke this acceptance, if it is determined by Miami-Dade County Product Control Division that this product or material fails to meet the requirements of the applicable building code.

This product is approved as described herein, and has been designed to comply with the Florida Building Code, including the High Velocity Hurricane Zone.

DESCRIPTION: Series "V707SGD" Vinyl Sliding Glass Door (XO or OX)– L.M.I.

APPROVAL DOCUMENT: Drawing No. **FL 00339**, titled "Series V707SGD White PVC, Sliding Glass Door", sheets 1 through 5 of 5, prepared by manufacturer dated 12/09/07 and last revised on 08/06/08, signed and sealed by L. Roberto Lomas, P.E., bearing the Miami-Dade County Product Control Approval stamp with the Notice of Acceptance number and approval date by the Miami-Dade County Product Control Division.

MISSILE IMPACT RATING: Large and Small Missile Impact

Limitation:

1. 1x or 2x buck must be properly secured to the substrate to transfer the imposed load.

LABELING: Each unit shall bear a permanent label with the manufacturer's name or logo, city, state and following statement: "Miami-Dade County Product Control Approved", unless otherwise noted herein.

RENEWAL of this NOA shall be considered after a renewal application has been filed and there has been no change in the applicable building code negatively affecting the performance of this product.

TERMINATION of this NOA will occur after the expiration date or if there has been a revision or change in the materials, use, and/or manufacture of the product or process. Misuse of this NOA as an endorsement of any product, for sales, advertising or any other purposes shall automatically terminate this NOA. Failure to comply with any section of this NOA shall be cause for termination and removal of NOA.

ADVERTISEMENT: The NOA number preceded by the words Miami-Dade County, Florida, and followed by the expiration date may be displayed in advertising literature. If any portion of the NOA is displayed, then it shall be done in its entirety.

INSPECTION: A copy of this entire NOA shall be provided to the user by the manufacturer or its distributors and shall be available for inspection at the job site at the request of the Building Official.

This NOA consists of this page 1 and evidence page E-1, as well as approval document mentioned above.

The submitted documentation was reviewed by **Ishaq I. Chanda, P.E.**

MIAMI-DADE COUNTY APPROVED

NOA No 08-0324.17
Expiration Date: November 20, 2013
Approval Date: November 20, 2008

10/30/08

NOTICE OF ACCEPTANCE: EVIDENCE SUBMITTED

A. DRAWINGS

1. Manufacturer's die drawings and sections
2. Drawing No. **FL 00339**, titled "Series V707SGD White PVC, Sliding Glass Door", sheets 1 through 5 of 5, prepared by manufacturer dated 12/09/07 and last revised on 08/06/08, signed and sealed by L. Roberto Lomas, P.E.

B. TESTS

1. Test reports on 1) Air Infiltration Test, per FBC, TAS 202-94
   2) Uniform Static Air Pressure Test, Loading per FBC, TAS 202-94
   3) Water Resistance Test, per FBC, TAS 202-94
   4) Forced Entry Test per FBC, TAS 202-94
   5) Large Missile Impact Test per FBC, TAS 201-94,
   6) Cyclic Wind Pressure Loading per FBC, TAS 203-94

   along with marked-up drawings and installation diagram of PVC sliding glass door, prepared by National Certified Testing Laboratories, Test Report No. **NCTL-110-10633-18**, dated 04/12/06, signed and sealed by Harold E. Rupp, P.E.
   Note: this test report has been revised by an addendum letter dated 01/04/08, issued by National Certified Testing Laboratories, signed and sealed by Harold E. Rupp, P.E.

C. CALCULATIONS

1. Anchor verification calculations dated 12/15/07, prepared, signed and sealed by Luis R. Lomas, P.E.
2. Complies with ASTM-E1300-02

D. QUALITY ASSURANCE

1. Miami Dade Building Code Compliance Office (BCCO).

E. MATERIAL CERTIFICATIONS

1. Notice of Acceptance No. **04-0816.02** issued to E.I. DuPont De Nemours & CO., Inc. for "DuPont Butacite'ST' PVB", expiring on 02/03/2010.
2. Notice of Acceptance No. 07-0517.07, issued to Thermoplast "White PVC Rigid", expiring on 07/05/12.

F. STATEMENTS

1. Statement letters of Compliance and "no financial interest", both dated 12/15/07, signed and sealed by Luis R. Lomas, P.E.
2. Statement letter of lab compliance, part of the above referenced test reports.

G. OTHER

1. None

Ishaq I. Chanda

Ishaq I. Chanda, P.E.
Product Control Examiner
NOA No 08-0342.17
Expiration Date: November 20, 2013
Approval Date: November 20, 2008

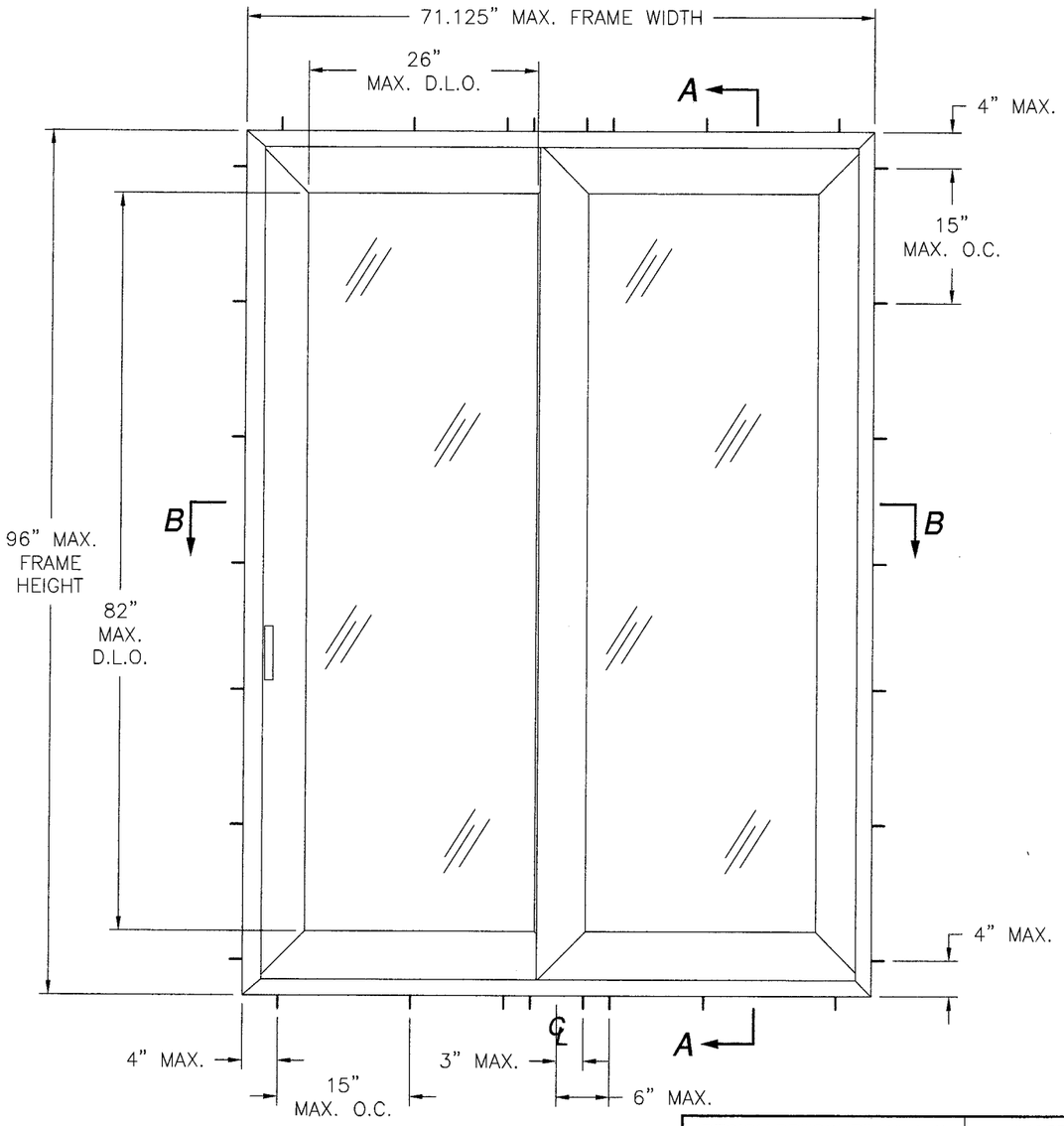

V707SGD

XO OR OX CONFIGURATION
EXTERIOR VIEW

DESIGN PRESSURE RATING	IMPACT RATING
±50PSF	LARGE AND SMALL MISSILE IMPACT

REVISIONS			
REV	DESCRIPTION	DATE	APPROVED
A	REVISED PER MD COMMENTS.	08/04/08	R.L.

NOTES:

1) THE PRODUCT SHOWN HEREIN IS DESIGNED AND MANUFACTURED TO COMPLY WITH THE REQUIREMENTS OF FLORIDA BUILDING CODE INCLUDING THE HVHZ.
2) WOOD FRAMING AND MASONRY OPENING TO BE DESIGNED AND ANCHORED TO PROPERLY TRANSFER ALL LOADS TO STRUCTURE. FRAMING AND MASONRY OPENING IS THE RESPONSIBILITY OF THE ARCHITECT OR ENGINEER OF RECORD.
3) CONTRACTOR IS RESPONSIBLE FOR MAINTAINING STRUCTURAL INTEGRITY OF WINDOW OPENING AND ALL WOOD FRAMING AROUND WINDOW.
4) UNITS MUST BE GLAZED WITH 1" INSULATED LAMINATED CONSISTING OF: 5/32" TEMPERED EXTERIOR PANEL – AIR – LAMINATED INTERIOR PANEL CONSISTING OF 5/32" ANN – .090 DUPONT BUTACITE PVB – 5/32" ANN GLAZING TO COMPLY WITH ASTM E1300–02.
5) APPROVED IMPACT PROTECTIVE SYSTEM IS NOT REQUIRED FOR THIS PRODUCT IN AREAS WHERE WIND BORNE DEBRIS PROTECTION IS REQUIRED.
6) SHIM AS REQUIRED AT EACH INSTALLATION ANCHOR WITH LOAD BEARING SHIM. SHIM WHERE SPACE OF 1/16" OR GREATER OCCURS. MAXIMUM ALLOWABLE SHIM STACK TO BE 1/4".
7) FOR ANCHORING INTO WOOD FRAMING OR 2X BUCK USE #8 WOOD SCREW WITH SUFFICIENT LENGTH TO ACHIEVE A 1 3/8" MINIMUM EMBEDMENT INTO SUBSTRATE. LOCATE ANCHORS AS SHOWN IN ELEVATIONS AND INSTALLATION DETAILS.
8) FOR ANCHORING INTO MASONRY WITH 1X BUCK USE 3/16" ITW TAPCONS WITH SUFFICIENT LENGTH TO ACHIEVE A 1 1/4" MINIMUM EMBEDMENT INTO SUBSTRATE WITH 2 5/8" MINIMUM EDGE DISTANCE. LOCATE ANCHORS AS SHOWN IN ELEVATIONS AND INSTALLATION DETAILS.
9) ALL FASTENERS TO BE CORROSION RESISTANT.
10) INSTALLATION ANCHORS SHALL BE INSTALLED IN ACCORDANCE WITH ANCHOR MANUFACTURER'S INSTALLATION INSTRUCTIONS, AND ANCHORS SHALL NOT BE USED IN SUBSTRATES WITH STRENGTHS LESS THAN THE MINIMUM STRENGTH SPECIFIED BELOW:
    A. WOOD – MINIMUM SPECIFIC GRAVITY OF G=0.42
    B. CONCRETE – MINIMUM COMPRESSIVE STRENGTH OF 3,200 PSI.
    C. MASONRY – STRENGTH CONFORMANCE TO ASTM C–90, GRADE N, TYPE 1 (OR GREATER).
11) ALLOWABLE STRESS INCREASE OF 1/3 WAS NOT USED IN THE DESIGN OF THE PRODUCT SHOWN HEREIN. WIND LOAD DURATION FACTOR Cd=1.6 WAS USED FOR WOOD ANCHOR CALCULATIONS.
12) FRAME AND SASH MATERIAL: PVC BY THERMOPLAST N.O.A 07–0517.07.
13) APPROVED CONFIGURATIONS: OX AND XO.

TABLE OF CONTENTS

SHEET NO.	DESCRIPTION
1	ELEVATION AND GENERAL NOTES
2, 3	CROSS SECTIONS AND B.O.M.
4	INSTALLATION DETAILS
5	COMPONENTS

Approved as complying with the Florida Building Code
Date NOV 20, 2008
NOA# 08-0324.17
Miami Dade Product Control Division
By Shaq I. Chandu

KOLBE & KOLBE MILLWORK
1211 DEPOT ST
MANAWA, WI 54949

V707SGD WHITE PVC SLIDING GLASS DOOR
ELEVATIONS AND NOTES

DRAWN:	DWG NO.	REV
R.L.	FL 00339	A

SCALE NTS | DATE 12/09/07 | SHEET 1 OF 5

Luis R Lomas
8/06/08

Luis R. Lomas P.E.
Florida No. 62514

PARTS LIST				
NO.	PART NUMBER	DESCRIPTION	MANUFACTURER	MATERIAL
1	S003	FRAME	THERMOPLAST INC	WHITE PVC
2	S021	1" GLAZING BEAD	THERMOPLAST INC	WHITE PVC
3	S017	SASH	THERMOPLAST INC	WHITE PVC
4	S008	SUPPORT BLOCK		
5	S018	SILL ADAPTER	THERMOPLAST	WHITE PVC
6	7059	SCREEN ADAPTER		
7	S084	SNAP-ON MEETING RAIL	THERMOPLAST INC	WHITE PVC
8		SILL		ALUMINUM 6063-T5
9		SASH RAIL		ALUMINUM 6063-T5
10		SCREEN		
11		ROLLER SUPPORT		ALUMINUM 6063-T5
12		SASH REINFORCEMENT		ALUMINUM 6063-T5
13		SCREEN ROLLER		
14	110-2550-10	WEEP COVER	RO-MAI	
15		TANDEM ROLLER		
16	1" X 2.5" X 2	SETTING BLOCK 80 DUROMETER		
17	DOW 995	SEALANT		DOW CORNING
18	HF-7320-187	WEATHER STRIP	SCHLEGEL	
19	SS-6945	WEATHER STRIP	SCHLEGEL	
20		SCREEN HDL INTERIOR & EXTERIOR		
21		SCREEN KEEPER		
22		SASH KEEPER		
23		SASH HDL INTERIOR & EXTERIOR		
24	#6 X 1/2"	SCREEN KEEPER SCREW FH		
25	#8 X 5/8"	SASH KEEPER SCREW FH		
26	#6 X 1"	FIXED SASH SCREWS FH		
27	T5927AMW	6" WEATHERSTRIP	ULTRAFAB	
28	EAQ705	SCREW PLUG		
29	S030	LOCK SIDE MOLDING		
30	#8 X 3/4"	REINFORCEMENT SCREW SMS		
31	S029	SASH TOP		
32	PB-8322-187	WEATHERSTRIP	SCHLEGEL	
33		RAIL REINFORCEMENT .079 THICK		STEEL G90
34	#6 X 3/4"	MEETING RAIL SCREWS FH		
35		SAFETY LOCK	RTG PROTECH	
36	#8 X 3/4"	SAFETY LOCK SCREW RH		
37	4560	INSTALLATION STRIP .059 THICK		STEEL G60
38		1" IGU 5/32" TEMP-AIR-5/32" ANN - .090 DUPONT BUTACITE PVB-5/32 ANN.		

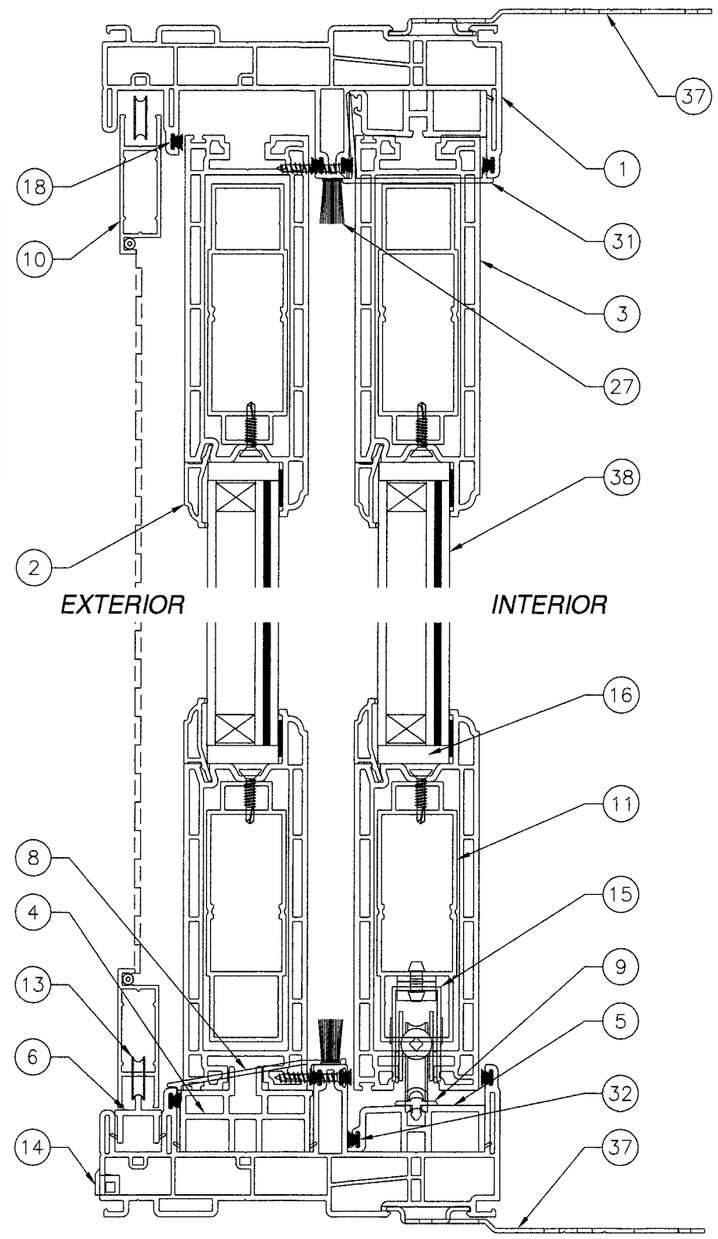

SECTION A-A

REVISIONS			
REV	DESCRIPTION	DATE	APPROVED
A	REVISED PER MD COMMENTS.	08/04/08	R.L.

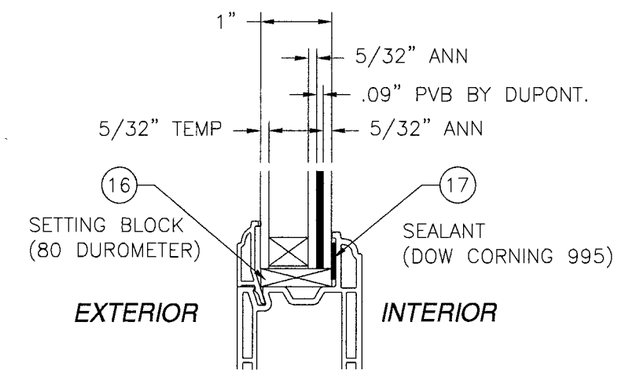

GLAZING DETAIL

NOTE:

WHITE PVC TO BE LABELED WITH AAMA CERTIFICATION LABEL, EXTRUDER NAME, CODE, CITY AND "MDCA".

Approved as complying with the Florida Building Code
Date Nov 20, 2008
NOA# 08-0324.17
Miami Dade Product Control Division
By [signature]

KOLBE & KOLBE MILLWORK
1211 DEPOT ST
MANAWA, WI 54949

V707SGD WHITE PVC SLIDING GLASS DOOR
CROSS SECTION AND B.O.M.

DRAWN:	DWG NO.	REV
R.L.	FL 00339	A
SCALE NTS	DATE 12/09/07	SHEET 2 OF 5

[signature] 8/06/08.

Luis R. Lomas P.E.
Florida No. 62514

REVISIONS			
REV	DESCRIPTION	DATE	APPROVED
A	REVISED PER MD COMMENTS.	08/04/08	R.L.

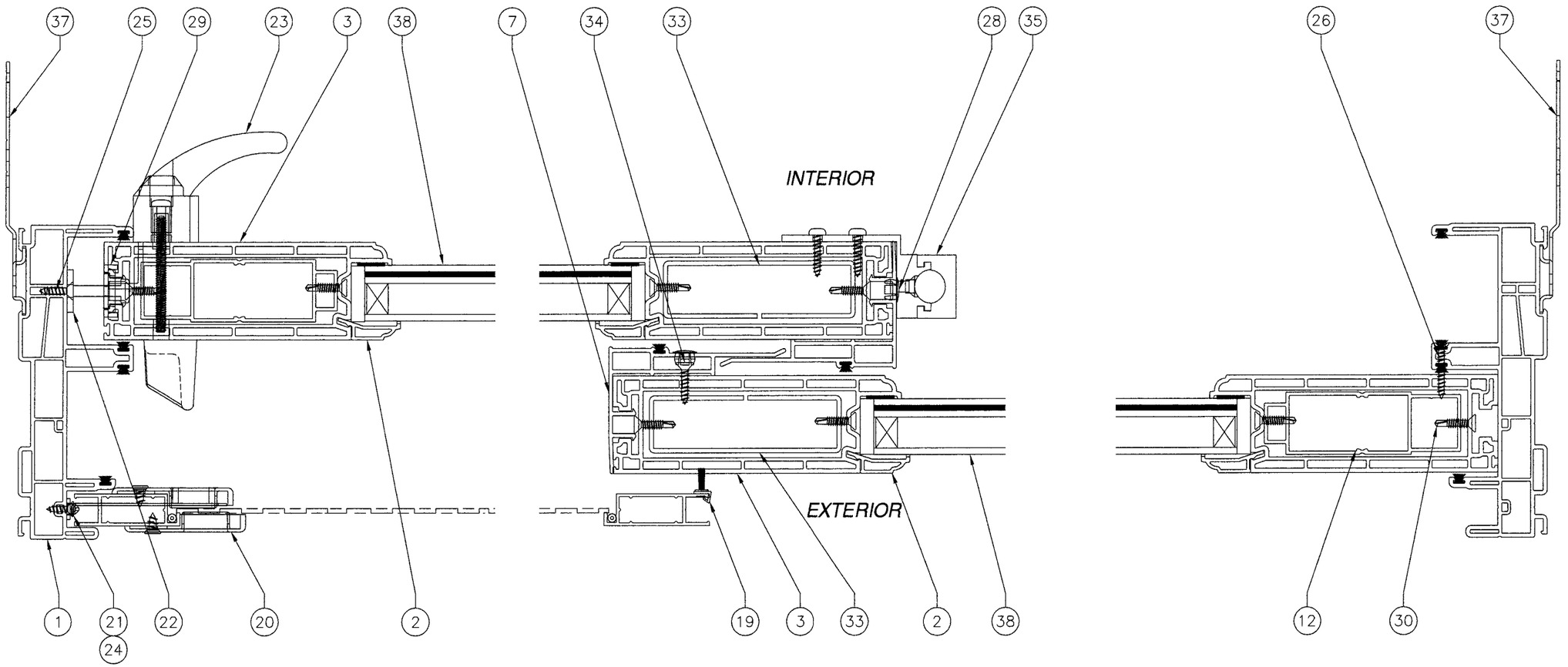

SECTION B-B

Approved as complying with the Florida Buiding Code
Date NOV 28, 2008
NOA# 08-0324.17
Miami Dade Product Control Division
By

KOLBE & KOLBE MILLWORK
1211 DEPOT ST
MANAWA, WI 54949

V707SGD WHITE PVC SLIDING GLASS DOOR
CROSS SECTION

DRAWN:	DWG NO.	REV
R.L.	FL 00339	A
SCALE NTS	DATE 12/09/07	SHEET 3 OF 5

8/06/08

Luis R. Lomas P.E.
Florida No. 62514

REVISIONS			
REV	DESCRIPTION	DATE	APPROVED
A	REVISED PER MD COMMENTS.	08/04/08	R.L.

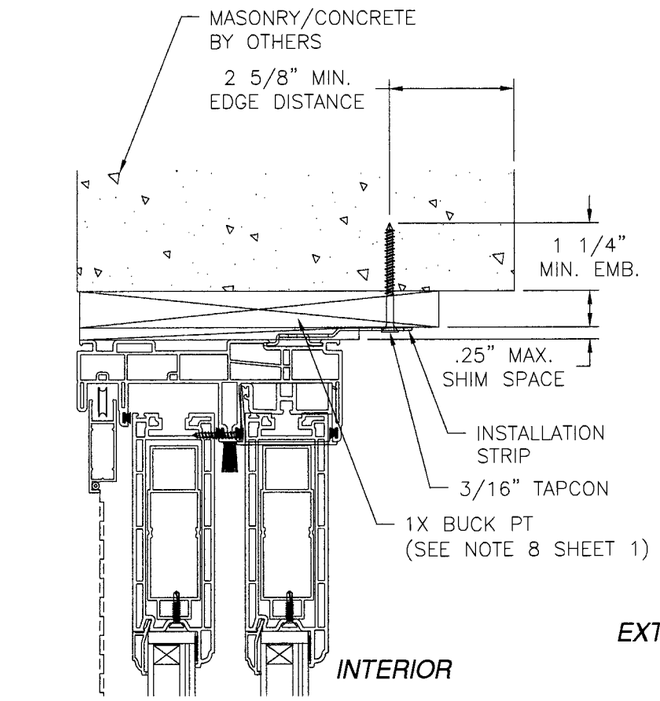

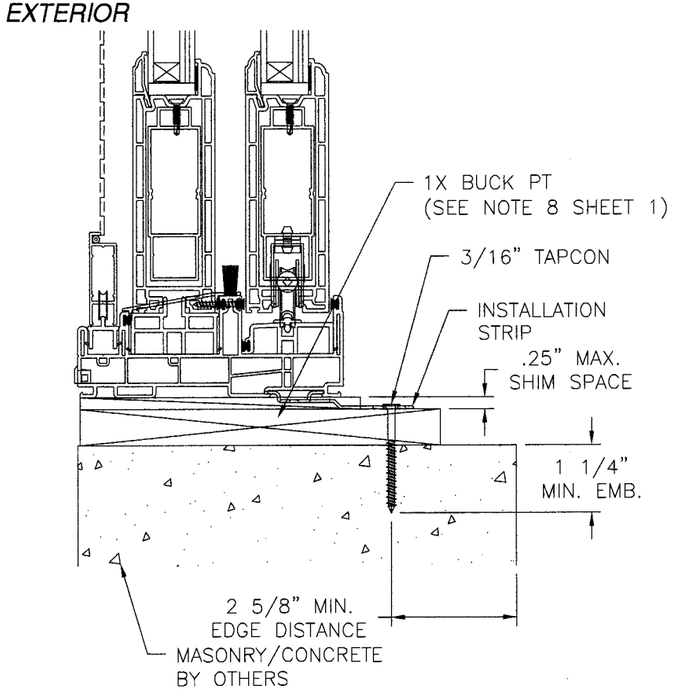

VERTICAL SECTION

INSTALLATION DETAILS

1X BUCK

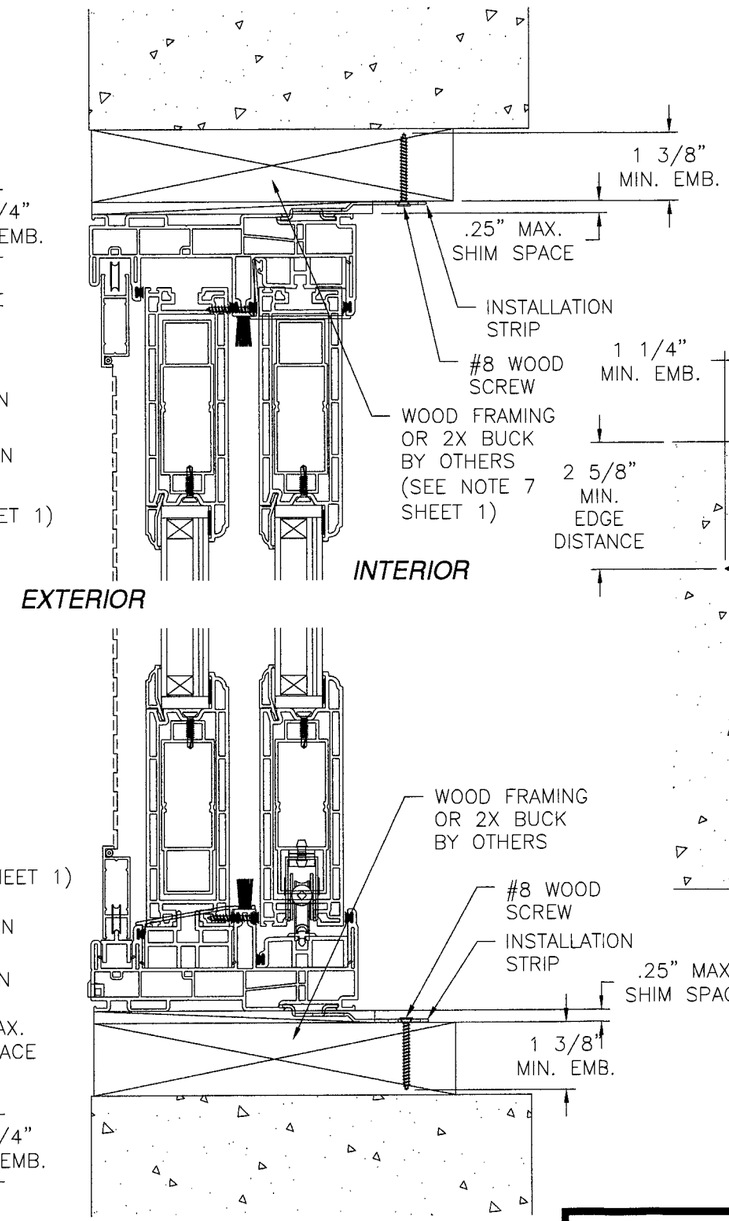

VERTICAL SECTION

INSTALLATION DETAILS

WOOD FRAMING OR 2X BUCK

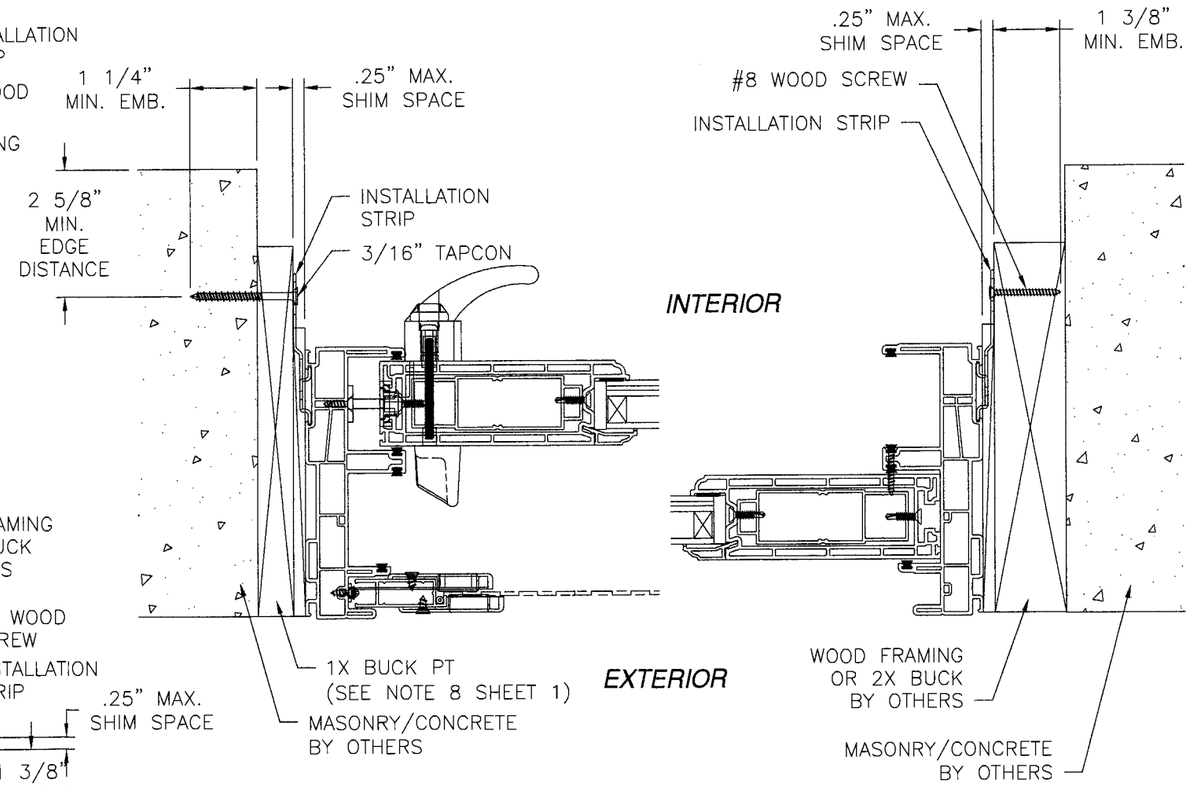

HORIZONTAL SECTION

INSTALLATION DETAILS

1X BUCK, WOOD FRAMING OR 2X BUCK

Approved as complying with the Florida Building Code
Date NOV 28, 2008
NOA# 08-0324.17
Miami Dade Product Control Division
By Bhag I. Chand

KOLBE & KOLBE MILLWORK
1211 DEPOT ST
MANAWA, WI 54949

V707SGD WHITE PVC SLIDING GLASS DOOR
INSTALLATION DETAILS

DRAWN: R.L.	DWG NO. FL 00339	REV A
SCALE NTS	DATE 12/09/07	SHEET 4 OF 5

Luis R. Lomas 8/06/08

Luis R. Lomas P.E.
Florida No. 62514

REVISIONS			
REV	DESCRIPTION	DATE	APPROVED
A	REVISED PER MD COMMENTS.	08/04/08	R.L.

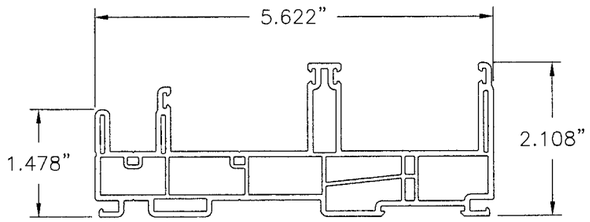

1 **FRAME**
VINYL PVC .075 THICK

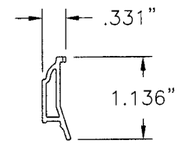

2 **GLAZING BEAD**
VINYL PVC .055 THICK

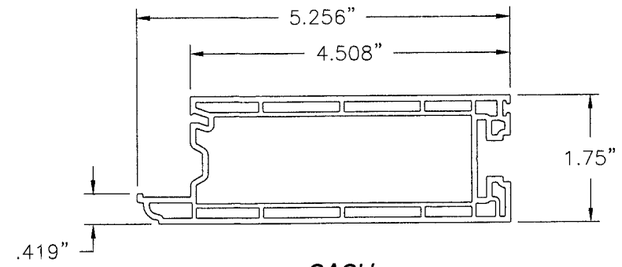

3 **SASH**
VINYL PVC .079 THICK

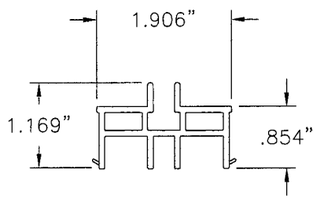

4 **SUPPORT BLOCK**
VINYL PVC .079 THICK

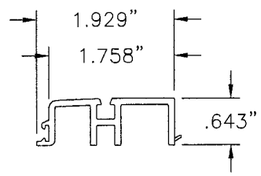

5 **SILL ADAPTER**
VINYL PVC .087 THICK

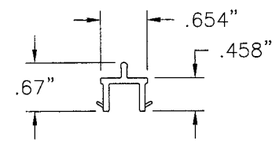

6 **SCREEN ADAPTER**
VINYL PVC .079 THICK

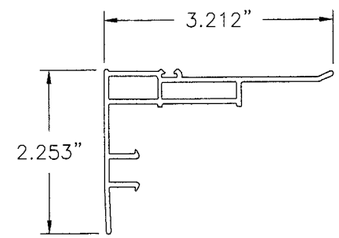

7 **SNAP-ON MEETING RAIL**
VINYL PVC .067 THICK

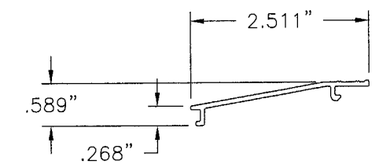

8 **SILL**
AL 6063-T5 .063 THICK

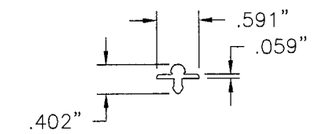

9 **SASH RAIL**
AL 6063-T5 .059 THICK

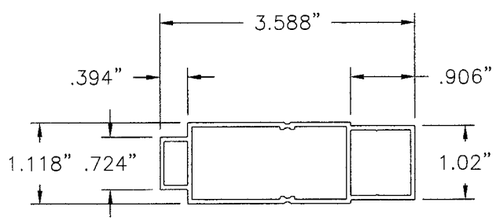

11 **ROLLER SUPORT**
AL 6063-T5 .059 THICK

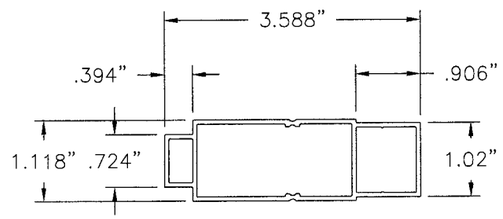

12 **SASH REINFORCEMENT**
AL 6063-T5 .059 THICK

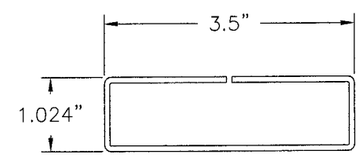

33 **RAIL REINFORCEMENT**
GALVANIZED STEEL G90 .079 THICK.

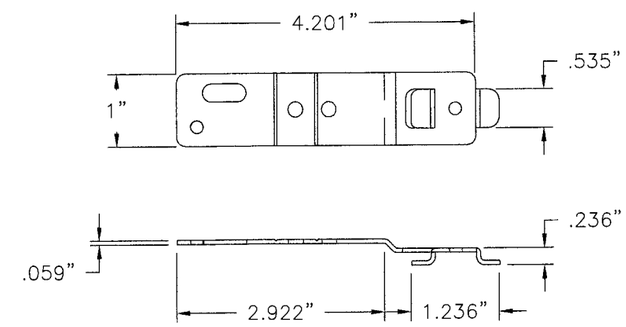

37 **INSTALLATION STRIP**
GALVANIZED STEEL G60

Approved as complying with the Florida Building Code
Date Nov 28, 2008
NOA# 08-0324.17
Miami Dade Product Control Division
By [illegible]

KOLBE & KOLBE MILLWORK
1211 DEPOT ST
MANAWA, WI 54949

V707SGD WHITE PVC SLIDING GLASS DOOR COMPONENTS

DRAWN: R.L.	DWG NO. FL 00339	REV A
SCALE NTS	DATE 12/09/07	SHEET 5 OF 5

Luis R. Lomas 8/06/08

Luis R. Lomas P.E.
Florida No. 62514