MIAMI-DADE COUNTY

BUILDING CODE COMPLIANCE OFFICE (BCCO)
PRODUCT CONTROL DIVISION

MIAMI-DADE COUNTY, FLORIDA
METRO-DADE FLAGLER BUILDING
140 WEST FLAGLER STREET, SUITE 1603
MIAMI, FLORIDA 33130-1563
(305) 375-2901 FAX (305) 372-6339
www.miamidade.gov/buildingcode

NOTICE OF ACCEPTANCE (NOA)

Nu-Vue Industries, Inc.
1053-1059 East 29 Street
Hialeah, Florida 33013

SCOPE:

This NOA is being issued under the applicable rules and regulations governing the use of construction materials. The documentation submitted has been reviewed by Miami-Dade County Product Control Division and accepted by the Board of Rules and Appeals (BORA) to be used in Miami Dade County and other areas where allowed by the Authority Having Jurisdiction (AHJ).

This NOA shall not be valid after the expiration date stated below. The Miami-Dade County Product Control Division (In Miami Dade County) and/or the AHJ (in areas other than Miami Dade County) reserve the right to have this product or material tested for quality assurance purposes. If this product or material fails to perform in the accepted manner, the manufacturer will incur the expense of such testing and the AHJ may immediately revoke, modify, or suspend the use of such product or material within their jurisdiction. BCPRC reserves the right to revoke this acceptance, if it is determined by Miami-Dade county Product Control Division that this product or material fails to meet the requirements of the applicable building code.

This product is approved as described herein, and has been designed to comply with the Florida Building Code, including the High Velocity Hurricane Zone.

DESCRIPTION: Series NVTA, NVTAS, NVBH, NVUH, NVRT and NVTH Wood Connectors.

APPROVAL DOCUMENT: Drawing No. **NU-2,** sheets 1 through 4, titled "NVTA and NVTAS, NVBH 24 and NVUH, NVRT and NVTH", dated 02/13/03, with last revision on 07/19/06, prepared by Nu-Vue Industries, Inc., signed and sealed by Vipin N. Tolat, P.E., bearing the Miami-Dade County Product Control revision stamp with the Notice of Acceptance (NOA) number and expiration date by the Miami-Dade County Product Control Division.

MISSILE IMPACT RATING: None

LABELING: Each unit shall bear a permanent label with the manufacturer's name or logo, city, state and following statement: "Miami-Dade County Product Control Approved", unless otherwise noted herein.

RENEWAL of this NOA shall be considered after a renewal application has been filed and there has been no change in the applicable building code negatively affecting the performance of this product.

TERMINATION of this NOA will occur after the expiration date or if there has been a revision or change in the materials, use, and/or manufacture of the product or process. Misuse of this NOA as an endorsement of any product, for sales, advertising or any other purposes shall automatically terminate this NOA. Failure to comply with any section of this NOA shall be cause for termination and removal of NOA.

ADVERTISEMENT: The NOA number preceded by the words Miami-Dade County, Florida, and followed by the expiration date may be displayed in advertising literature. If any portion of the NOA is displayed, then it shall be done in its entirety.

INSPECTION: A copy of this entire NOA shall be provided to the user by the manufacturer or its distributors and shall be available for inspection at the job site at the request of the Building Official.

This NOA **renews NOA # 05-0701.04** and consists of this page 1 and evidence pages E1 and E2, as well as approval document mentioned above.

The submitted documentation was reviewed by **Carlos M. Utrera, P.E.**

MIAMI-DADE COUNTY APPROVED

5/2/08

NOA No: 08-0326.11
Expiration Date: August 21, 2013
Approval Date: May 22, 2008

NOTICE OF ACCEPTANCE: EVIDENCE SUBMITTED

A. DRAWINGS

1. Drawing No. **NU-2,** sheets 1 through 4, titled "NVTA and NVTAS, NVBH 24 and NVUH, NVRT and NVTH", dated 02/13/03 with last revision on 07/19/06, prepared by Nu-Vue Industries, Inc., signed and sealed by Vipin N. Tolat, P.E.
   "Submitted under NOA No. 05-0701.04"

B. TEST

Test reports on wood connectors per ASTM D1761 by Product Testing, Inc., signed and sealed by C. R. Caudel, P.E. and S. E. Black, P.E.

	Report No.	Wood Connector	Direction	Date
1.	PT 02-4073	NVTA	Upward	11/06/02
2.	PT 02-4075	NVTA	Upward	11/07/02
3.	PT 02-4074	NVTA	Upward	11/06/02
4.	PT 02-3938	NVTA	Upward	08/06/02
5.	PT 03-4177	NVRT36	Upward	02/03/03
6.	PT 03-4202	NVRT36-T	Upward	02/19/03
7.	PT 03-4271	NVRT36-T	Upward	03/27/03
8.	PT 03-4270	NVRT24-T	Upward	03/27/03
9.	PT 02-4095	NVUH26	Up & Downward	01/17/03
10.	PT 02-4096	NVBH24	Up &Downward	12/03/02
11.	31-22456.0002	NVTA & NVTAS	Lateral	07/06/02
12.	PT 04-4698	NVTH24	Upward Parallel/Perpendicular	04/15/04
13.	PT 04-5036	NVTH24	Upward Load	12/10/04

C. CALCULATIONS

Report of Design Capacities prepared by V. N. Tolat, P.E.

	Product Model	No. of Pages	Date	Signature
1.	NVBM24	7 through 8	05/05/03	V. N. Tolat, P.E
2.	NVRT	9 through 14	05/05/03	V. N. Tolat, P.E.
3.	NVTA & NVTAS	1 through 6	05/05/03	V. N. Tolat, P.E.
4.	NVTA & NVTAS	1 through 14	02/06/03	V. N. Tolat, P.E.
5.	NVRT	15 through 15	07/07/03	V. N. Tolat, P.E.

"Submitted under NOA No. 04-1202.01"

D. QUALITY ASSURANCE

1. Miami Dade Building Code Compliance Office (BCCO).

5/2/08

Carlos M. Utrera, P.E.
Product Control Examiner
NOA No: 08-0326.11
Expiration Date: August 21, 2013
Approval Date: May 22, 2008

NOTICE OF ACCEPTANCE: EVIDENCE SUBMITTED

EMATERIAL CERTIFICATIONS

E. STATEMENTS

1. No Financial Interest and code compliance letter issued by Vipin N. Tolat, P.E., on 03/26/03 signed and sealed by V. N. Tolat, P.E.
   "Submitted under NOA No. 04-1202.01"
2. Letter to Nu-Vue Industries issued by Building Code Compliance Office on 08/10/04 and signed by C. F. Font, P.E.
   "Submitted under NOA No. 04-1202.01"

G. OTHER

1. Notice of Acceptance No. **08-0326.11**, issued to Nu-Vue Industries, Inc., approved on 09/14/06 and expiring on 08/21/08.

5/2/08

Carlos M. Utrera, P.E.
Product Control Examiner
NOA No: 08-0326.11
Expiration Date: August 21, 2013
Approval Date: May 22, 2008

TABLE 1

Truss Anchors NVTA and Riveted Truss Anchors with Seat NVTAS

H Length (in)	Product Code		Gauge seat	Gauge strap
16	NVTA–16	NVTAS 212	20	14
18	NVTA–18	NVTAS 214	20	14
20	NVTA–20	NVTAS 216	20	14
22	NVTA–22	NVTAS 218	20	14
24	NVTA–24	NVTAS 220	20	14
26	NVTA–26	NVTAS 222	20	14
28	NVTA–28	NVTAS 224	20	14
30	NVTA–30	NVTAS 226	20	14
36	NVTA–36	NVTAS 232	20	14
48	NVTA–48	NVTAS 244	20	14

No. of Fasteners each strap 10d	Maximum Allowable Load (lbs)			
	Uplift Single Strap	Uplift Double Straps (NVTA ONLY)	L1 Single & Double Straps	L2 Single & Double Straps
5	757	1514	250	500
6	805	1610	250	500
7	854	1708	250	500
8	902	*1804	250	500
9	951	*1902	250	500
10	999	*1998	250	500
11	1048	*2096	250	500
12	1096	*2192	250	500
13	1145	*2290	250	500
14	1193	*2290	250	500

*Note: For 8 or more nails per strap, use double truss for double straps.

TABLE 2

Truss Anchors NVTA and Riveted Truss Anchors with Seat NVTAS

H Length (in)	Product Code		Gauge seat	Gauge strap
16	NVTA–16	NVTAS 212	20	14
18	NVTA–18	NVTAS 214	20	14
20	NVTA–20	NVTAS 216	20	14
22	NVTA–22	NVTAS 218	20	14
24	NVTA–24	NVTAS 220	20	14
26	NVTA–26	NVTAS 222	20	14
28	NVTA–28	NVTAS 224	20	14
30	NVTA–30	NVTAS 226	20	14
36	NVTA–36	NVTAS 232	20	14
48	NVTA–48	NVTAS 244	20	14

No. of Fasteners each strap 10d x 1.5"	Maximum Allowable Load (lbs)			
	Uplift Single Strap	Uplift Double Straps (NVTA ONLY)	L1 Single & Double Straps	L2 Single & Double Straps
5	1032	2236	250	500
6	1127	2254	385	565
7	1136	2272	520	630
8	1144	*2288	520	630
9	1153	*2306	520	630
10	1161	*2322	520	630
11	1170	*2340	520	630
12	1178	*2356	520	630
13	1187	*2374	520	630

*Note: For 8 or more nails per strap, use double truss for double straps.

General Notes:

1. Steel shall conform to ASTM A653, structural grade 33 (Min. yield 33 ksi) and a minimum galvanized coating of G 60 per ASTM A525.

2. Allowable loads are based on National Desing specifications (NDS) for wood construction, 2001 Edition and Florida Building Code 2004.

3. Design loads are for Southern Pine species with a specific gravity of 0.55. Allowable loads for other species shall be adjusted accordingly.

4. Nail values are based on NDS table 11P, G=0.55 for common wire nails and have been reduced for Penetration Depth factor C_D.

5. Allowable loads for wind uplift have already been increased by a duration factor of 1.6 for anchor nails. 33% steel stress increase is not used in the tabulated values.

6. Allowable loads for more than one direction for a single connection cannot be added together. A design load which can be divided into components in the directions given must be evaluated as follows:

$$\frac{\text{Actual Uplift}}{\text{Allowable Uplift}} + \frac{\text{Actual L1}}{\text{Allowable L1}} + \frac{\text{Actual L2}}{\text{Allowable L2}} <= 1.0$$

7. Allowable loads are based on $1\frac{1}{2}$" thick wood members unless otherwise noted.

8. All tie beams and grouted concrete masonry shall comply with chapters 19 and 21 of 2004 FBC. Concrete for tie beams and grout and mortar for concrete masonry shall be a min. of 2500 psi. Concrete masonry shall comply with ASTM C90.

9. All tests have been conducted in accordance with ASTM D–1761.

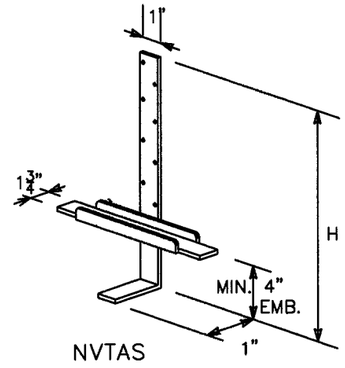

NVTAS

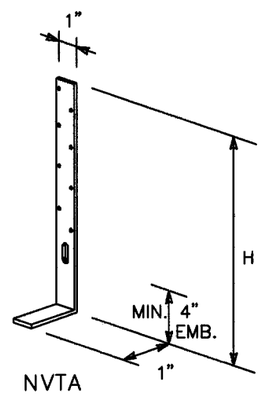

NVTA

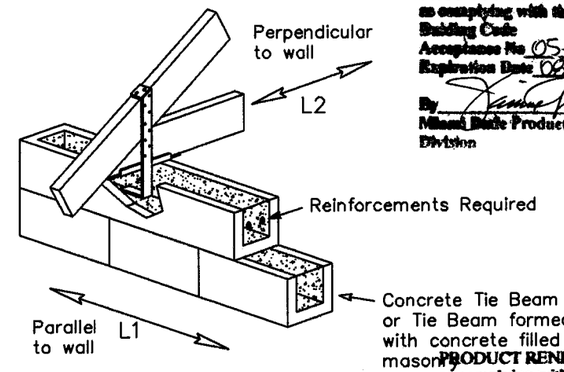

PRODUCT REVISED
as complying with the Florida Building Code
Acceptance No 05-0701.04
Expiration Date 08/21/08
By
Miami Dade Product Control Division

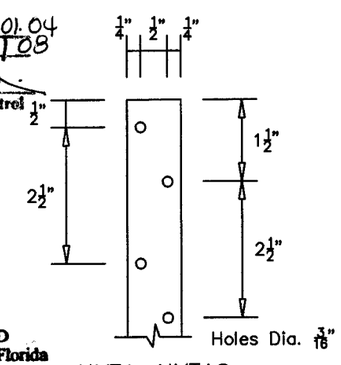

NVTA, NVTAS

PRODUCT RENEWED
as complying with the Florida Building Code
Acceptance No 08-0326.11
Expiration Date 08/21/2013
By
Miami Dade Product Control Division

VIPIN N. TOLAT, PE (CIVIL)
FL. REG. # 12847
15123 LANTERN CREEK LANE
HOUSTON, TX 77068

7/27/06

Nu–Vue Industries, Inc.
1053–1059 East 29 Street
Hialeah, Florida 33013
PHONE: (305) 694–0397
FAX: (305) 694–0398

NVTA AND NVTAS TRUSS ANCHORS

DWG #:	Sheet:	Date:	Revisions:
NU–2	1 of 4	FEB. 13, 2003	July 7, 2003 June 15, 2005 Jan. 10, 2006 July 19, 2006

TABLE 5

NVRT Flat and Twisted Rafter Ties

Length (in)	Product Code	Gauge
12	NVRT-12	14
16	NVRT-16	14
18	NVRT-18	14
20	NVRT-20	14
22	NVRT-22	14
24	NVRT-24	14
30	NVRT-30	14
36	NVRT-36	14
48	NVRT-48	14

16d Fasteners		Maximum Uplift Load (lbs)	
TOTAL	In each member*	Flat Ties	Twisted Ties
8	4	725	724
10	5	861	860
12	6	998	996
14	7	1135	1132

Notes:

1. Specify "F" for Flat and "T" for Twisted when ordering.
2. Fastener values are based on a minimum $1\frac{1}{2}$" thick wood members.
3. * Indicates no. of nails in each connected wood member.
4. See General Notes, sheet 1.

TABLE 6

NVRT Twisted Rafter Ties to Concrete Tie Beams or Concrete Filled Masonry

Length (in)	Product Code	Gauge
12	NVRT-12	14
16	NVRT-16	14
18	NVRT-18	14
20	NVRT-20	14
22	NVRT-22	14
24	NVRT-24	14
30	NVRT-30	14
36	NVRT-36	14
48	NVRT-48	14

No. of 16d nails to Wood Framing	No. of $\frac{1}{4}$" diameter Tapcons to Concrete	Maximum Uplift Load (lbs)
4	6	722
5	7	856
6	8	991
7	9	1125

PRODUCT RENEWED
as complying with the Florida Building Code
Acceptance No 08-0326.11
Expiration Date 08/21/2013
By
Miami Dade Product Control Division

PRODUCT REVISED
as complying with the Florida Building Code
Acceptance No 05-0701.04
Expiration Date 08/21/08
By
Miami Dade Product Control Division

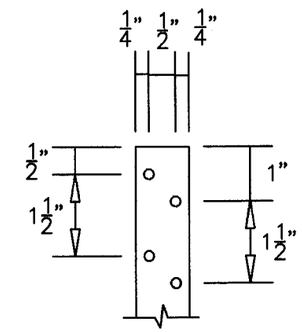

NVRT Anchor Holes dia. $\frac{3}{16}$"

Notes:

1. ITW tapcons shall be embedded a minimum of $1\frac{1}{4}$" into concrete tiebeam or tiebeam formed with concrete filled masonry. ITW tapcons shall have a min. edge distance of $2\frac{1}{2}$" and minimum spacing of $1\frac{1}{2}$" as shown.
2. See General Notes, sheet 1.
3. All tapcons must be in the same row space at $1\frac{1}{2}$" on centers. Do not use holes in the opposite row. Strap must be long enough to accommodate required tapcons.

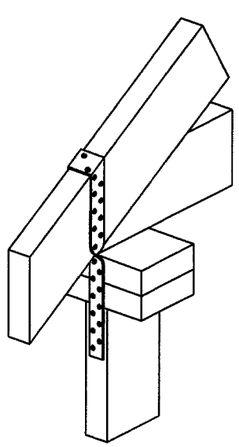

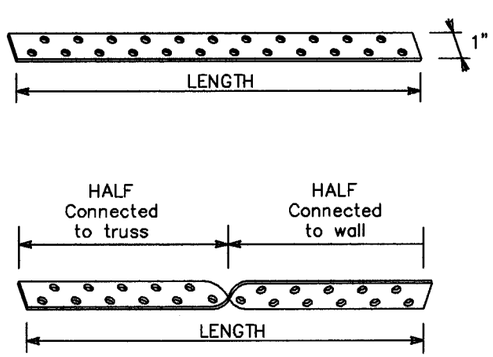

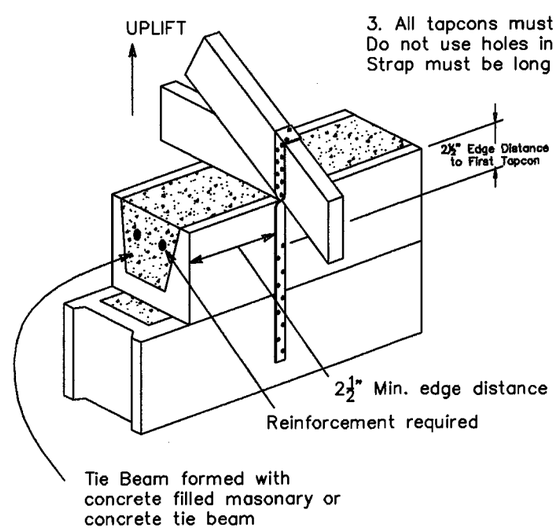

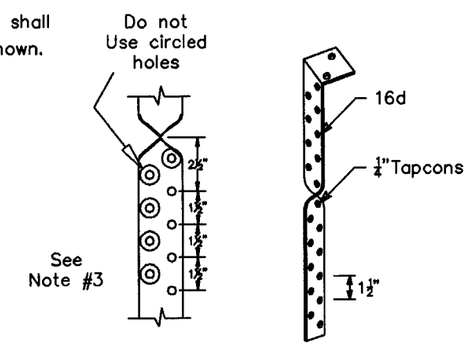

VIPIN N. TOLAT, PE (CIVIL)
FL. REG. # 12847
15123 LANTERN CREEK LANE
HOUSTON, TX 77068

7/27/06

Nu-Vue Industries, Inc.
1053-1059 East 29 Street
Hialeah, Florida 33013
PHONE: (305) 694-0397
FAX: (305) 694-0398

NVRT FLAT AND TWISTED RAFTER TIES

DWG #:	Sheet:	Date:	Revisions:
NU-2	3 of 4	FEB. 13, 2003	July 7, 2003 June 15, 2005 Jan. 10, 2006 July 19, 2006

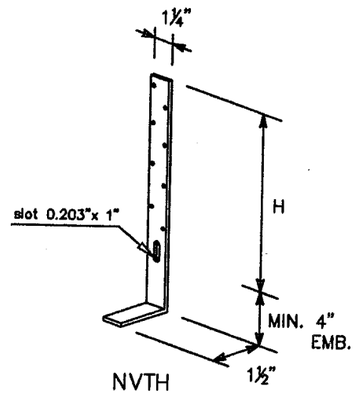

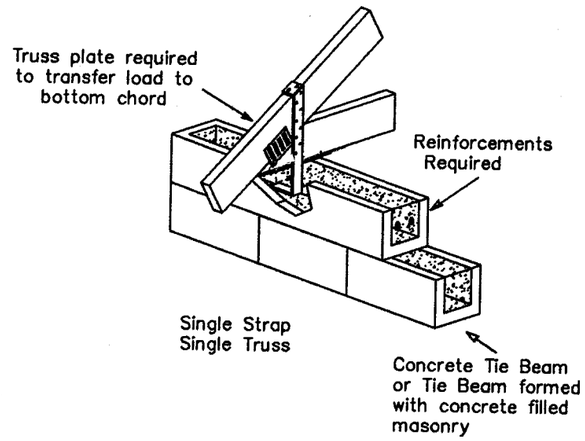

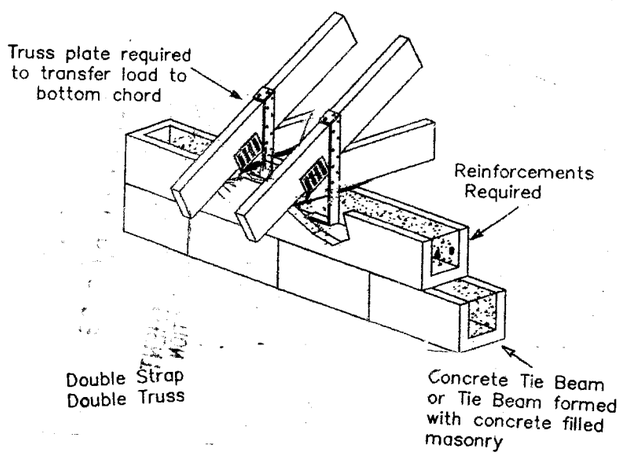

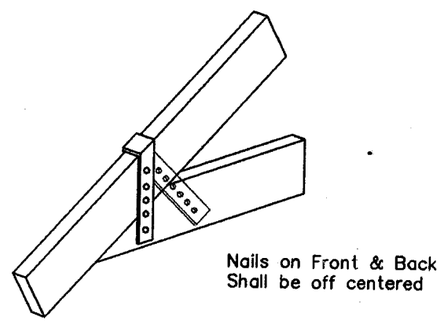

5 Nails in Front (Min.)
Nails 10d x 1.5"

TABLE 7

Truss Anchors NVTH

H Length (in)	Product Code	Gauge seat	Gauge strap
12	NVTH–16	18	14
14	NVTH–18	18	14
16	NVTH–20	18	14
18	NVTH–22	18	14
20	NVTH–24	18	14
22	NVTH–26	18	14
24	NVTH–28	18	14
26	NVTH–30	18	14
32	NVTH–36	18	14
44	NVTH–48	18	14

No. of Fasteners in each Strap 10d x 1.5"	Maximum Uplift Loads (lbs)	
	Single Strap on Single Truss	Double Straps on Double Truss
5	1032	2064
6	1222	2444
7	1275	2550
8	1329	2658
9	1383	2766
10	1437	2874
11	1490	2980
12	1544	3088
13	1598	3196

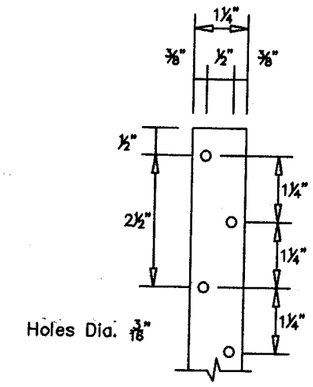

PRODUCT RENEWED
as complying with the Florida Building Code
Acceptance No 08-0326.11
Expiration Date 08/21/2013
By
Miami-Dade Product Control Division

PRODUCT REVISED
as complying with the Florida Building Code
Acceptance No 05-0301.04
Expiration Date 08/21/08
By
Miami-Dade Product Control Division

VIPIN N. TOLAT, PE (CIVIL)
FL. REG. # 12847
15123 LANTERN CREEK LANE
HOUSTON, TX 77068

7/27/06

Nu–Vue Industries, Inc.
1053–1059 East 29 Street
Hialeah, Florida 33013
Phone: (305) 694–0397
Fax: (305) 694–0398

NVTH ANCHORS

DWG #:	Sheet:	Date:	Revisions:
NU–2	4 of 4	JULY 19, 2006	

TABLE 3

NVBH 24 BUTTERFLY HANGER

SIZE	PRODUCT CODE	GAUGE	FASTENER SCHEDULE		ALLOWABLE LOADS (lbs.)
			HEADER 8d	JOIST 8d	DOWNWARD GRAVITY LOADS
2x4	NVBH24	18	12	6	1113

Notes:

1. Use all specified fasteners in schedule to achieve values indicated.
2. Values are based on $1\frac{1}{2}$" header and Joist thickness.
3. See General Notes, Sheet 1.

TABLE 4

NVUH 26 JOIST HANGER

SIZE	PRODUCT CODE	GAUGE	FASTENER SCHEDULE		ALLOWABLE LOADS (lbs.)	
			HEADER 16d	JOIST 10d x $1\frac{1}{2}$"	DOWNWARD GRAVITY LOADS	WIND UPLIFT LOAD
2x6	NVUH26	14	20	10	2233	1213

Notes:

1. Use all specified fasteners in schedule to achieve values indicated.
2. Values are based on 3" header thickness and $1\frac{1}{2}$" Joist thickness.
3. See General Notes, Sheet 1.

PRODUCT REVISED
as complying with the Florida Building Code
Acceptance No 05-0701.04
Expiration Date 08/21/08
By
Miami Dade Product Control Division

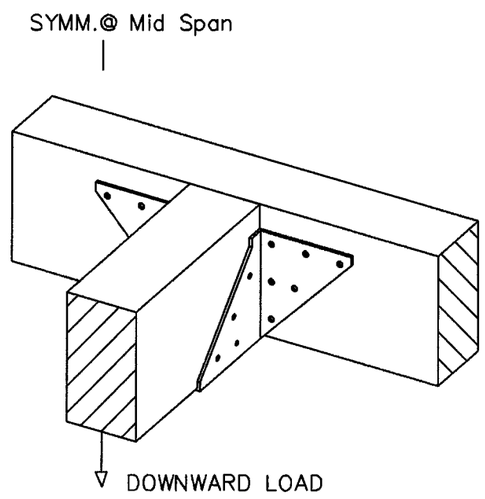

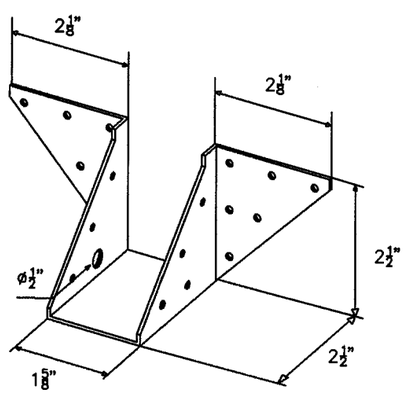

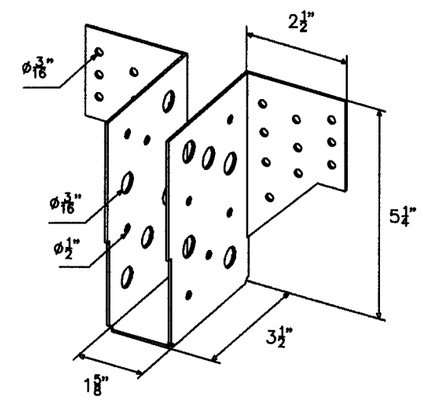

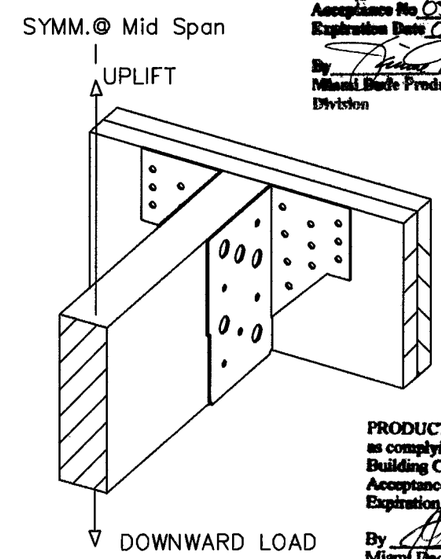

PRODUCT RENEWED
as complying with the Florida Building Code
Acceptance No 08-0326.11
Expiration Date 08/21/2013
By
Miami Dade Product Control Division

VIPIN N. TOLAT, PE (CIVIL)
FL. REG. # 12847
15123 LANTERN CREEK LANE
HOUSTON, TX 77068

7/27/06

Nu–Vue Industries, Inc.
1053–1059 East 29 Street
Hialeah, Florida 33013
PHONE: (305) 694–0397
FAX: (305) 694–0398

NVBH 24 AND NVUH 26 HANGERS

DWG #:	Sheet:	Date:	Revisions:
NU–2	2 of 4	FEB. 13, 2003	July 7, 2003 June 15, 2005 Jan. 10, 2006 July 19, 2006