MIAMI-DADE

BUILDING CODE COMPLIANCE OFFICE (BCCO)
PRODUCT CONTROL DIVISION

MIAMI-DADE COUNTY, FLORIDA
METRO-DADE FLAGLER BUILDING
140 WEST FLAGLER STREET, SUITE 1603
MIAMI, FLORIDA 33130-1563
(305) 375-2901 FAX (305) 375-2908

NOTICE OF ACCEPTANCE (NOA)

Roller Star Corporation
1460 S W 6th Ct. Building #1400
Pompano Beach, Fl. 33069

SCOPE:
This NOA is being issued under the applicable rules and regulations governing the use of construction materials. The documentation submitted has been reviewed by Miami-Dade County Product Control Division and accepted by the Board of Rules and Appeals (BORA) to be used in Miami Dade County and other areas where allowed by the Authority Having Jurisdiction (AHJ).

This NOA shall not be valid after the expiration date stated below. The Miami-Dade County Product Control Division (In Miami Dade County) and/or the AHJ (in areas other than Miami Dade County) reserve the right to have this product or material tested for quality assurance purposes. If this product or material fails to perform in the accepted manner, the manufacturer will incur the expense of such testing and the AHJ may immediately revoke, modify, or suspend the use of such product or material within their jurisdiction. BORA reserves the right to revoke this acceptance, if it is determined by Miami-Dade County Product Control Division that this product or material fails to meet the requirements of the applicable building code.
This product is approved as described herein, and has been designed to comply with the High Velocity Hurricane Zone of the Florida Building Code.

DESCRIPTION: RE 1500 Extruded Aluminum Roll Shutter

APPROVAL DOCUMENT: Drawing No. 05-185R1, titled "RE 1500 Extruded Aluminum Roll Shutters", prepared by EngCo, Inc. dated 02/26/07 sheets 1 through 15 of 15 with no revisions, signed and sealed on 02/27/07 by Pedro De Figueiredo P.E., bearing the Miami-Dade County Product Control Renewal stamp with the Notice of Acceptance number and Expiration date by the Miami-Dade County Product Control Division.

MISSILE IMPACT RATING: Large and Small Missile Impact

LABELING: Each unit shall bear a permanent label with the manufacturer's name or logo, city, state and the following statement: "Miami-Dade County Product Control Approved", unless otherwise noted herein.

RENEWAL of this NOA shall be considered after a renewal application has been filed and there has been no change in the applicable building code negatively affecting the performance of this product.

TERMINATION of this NOA will occur after the expiration date or if there has been a revision or change in the materials, use, and/or manufacture of the product or process. Misuse of this NOA as an endorsement of any product, for sales, advertising or any other purposes shall automatically terminate this NOA. Failure to comply with any section of this NOA shall be cause for termination and removal of NOA.

ADVERTISEMENT: The NOA number preceded by the words Miami-Dade County, Florida, and followed by the expiration date may be displayed in advertising literature. If any portion of the NOA is displayed, then it shall be done in its entirety.

INSPECTION: A copy of this entire NOA shall be provided to the user by the manufacturer or its distributors and shall be available for inspection at the job site at the request of the Building Official.
This NOA **renews NOA # 05-0804.01** and consists of this page, evidence page E1 and approval document mentioned above.
The submitted documentation was reviewed by **Mohammed Iqbal Shaikh, P.E.**

MIAMI-DADE COUNTY APPROVED MX 04/12/08

Roller Star Corporation

NOTICE OF ACCEPTANCE: EVIDENCE SUBMITTED

A. DRAWINGS

Drawing No. 05-185R1, titled "RE 1500 Extruded Aluminum Roll Shutters", prepared by EngCo, Inc. sheets 1 through 15 of 15, dated 02/26/07 with no revisions, signed and sealed on 02/27/07 by Pedro De Figueiredo P.E.,

B. TESTS

Construction Testing Corporation Report No. 02-016 sheets 1 thru 8 of 8 dated June 28, 2002, signed and Sealed by Yamil G. Kuri P.E. on September 5, 2002 for Testing Standards TAS 201, TAS 202 and TAS 203.

C. CALCULATIONS

1. Calculations and design for Slat, Track Anchorage, Track Assembly Screws, Header, Mullion Storm Bars and analysis of test results prepared by EngCo, Inc. dated 06/27/02, signed and sealed by Pedro De Figueiredo P.E.,

2. Addendum to calculations prepared by EngCo, Inc. dated 09/12/02 signed and sealed by Pedro De Figueiredo P.E.,

D. MATERIAL CERTIFICATIONS

None

E. STATEMENTS

1. Code Compliance letter by EngCo Inc .signed and sealed on July 21, 2005 by Pedro De Figueiredo, P.E.

2. No Financial Interest Letter issued by EngCo Inc. signed and sealed on Sept 12, 2002 by Pedro De Figueiredo, P.E.

F QUALITY ASSURANCE

1. Miami-Dade County Building Code Compliance Office.

G. OTHER

NOA **05-0804.01**

Mohammed Iqbal Shaikh, P. E.
Senior Building Code Compliance Specialist
NOA No. 08-0408.02
Expiration Date: April 10, 2013
Approval Date: May 08, 2008

ROLL SHUTTER RE 1500

GENERAL NOTES:

1- DEFINITION: THIS PRODUCT IS A ROLLING TYPE SHUTTER; DESIGNED, CONSTRUCTED AND ERECTED TO EASILY ENCLOSE AN AREA, PROVIDING PROTECTION FROM HURRICANE FORCE WINDS WITHIN THE ALLOWABLE DESIGNED PRESSURES AND LIMITATIONS STATED IN THIS APPROVAL.

2- CODE: FLORIDA BUILDING CODE 2004 (2005/2006 SUPPLEMENTS). THIS PRODUCT HAS BEEN TESTED AND DESIGNED ACCORDINGLY WITH SECTIONS 1609.1.4 (TAS 201, 202, 203 'LARGE MISSILE'), 1613.1.9, 1625, 1626, 2003, 2413. THE DESIGN APPLIES TO WIND BORNE DEBRIS REGIONS (LEVEL 'D' ASTM E1996-02) INCLUDING HVHZ (DADE & BROWAD COUNTIES LARGE MISSILE - TAS 201).

3- POSTING: A PERMANENT LEGIBLE DECAL SHALL BE PLACED AT A READILY VISIBLE LOCATION STATING THE FOLLOWING:

'RE 1500 SERIES ROLL SHUTTER
ROLLER STAR - POMPANO BEACH - FLORIDA
DADE COUNTY PRODUCT CONTROL APPROVED'

4- LOADS: THE DESIGNED LOAD MUST BE CALCULATED, AS PER ASCE 7-02 (SECTION 1620, FLORIDA BUILDING CODE) BY A PROFESSIONAL ARCHITECT OR ENGINEER FOR EACH SPECIFIC PROJECT. THE CALCULATED DESIGNED PRESSURE MUST NOT EXCEED THE ALLOWABLE PRESSURES FOR EACH SHUTTER COMPONENT TO BE USED.

5- MATERIAL: ALL ALUMINUM STRUCTURE AND COMPONENTS SHALL BE DESIGNED AS PER CHAPTER 20 OF THE FBC. EXTRUDED SHAPES SHALL BE MADE OF 6063-T5 ALLOYS OR AS NOTED.

6- FASTENERS: ASSEMBLY SCREWS AND ANCHORS SHALL BE AS SPECIFIED IN THE CURRENT SET OF DRAWINGS. INSTALLATION AND LOADS AS PER THIS APPROVAL.

7- USE: IT SHALL BE THE RESPONSIBILITY OF THE CONTRACTOR, ARCHITECT OR ENGINEER OF RECORD TO VERIFY THE FOLLOWING:
7.1- THE STABILITY OF THE STRUCTURE WHERE THE SHUTTER IS TO BE ATTACHED INSURING PROPER ANCHORAGE.
7.2- THE SITE SPECIFIC PROJECT CRITERIA, SUCH AS BUT NOT LIMITED TO, WIND LOADS, LOCAL CODE REQUIREMENTS, DESIGNED PRESSURES ETC.
7.3- THAT THIS APPROVAL IS ADEQUATE TO THE SPECIFIC PROJECT.

INDEX:

SHEET 1 of 15 - COVER SHEET, INDEX, GENERAL NOTES
SHEET 2 of 15 - SHUTTER COMPONENTS
SHEET 3 of 15 - SLATS WIND LOAD (TABLES 3.1, 3.2)
SHEET 4 of 15 - GUIDE RAILS MOUNTING OPTIONS
SHEET 5 of 15 - STORM BARS SELECTION & DEFLECTION TABLE
SHEET 6 of 15 - STORM BARS SELECTION & DEFLECTION TABLE
SHEET 7 of 15 - STORM BARS ANCHORING TABLES
SHEET 8 of 15 - HEADER SELECTION & DEFLECTION TABLES
SHEET 9 of 15 - HEADER SELECTION & DEFLECTION TABLES
SHEET 10 of 15 - HEADER ANCHORING TABLES
SHEET 11 of 15 - MULLION SELECTION TABLE
SHEET 12 of 15 - MULLION ANCHORING TABLES
SHEET 13 of 15 - HOOD ASSEMBLY
SHEET 14 of 15 - SLATS DEFLECTION TABLES (14.1, 14.2, 14.3, 14.4)
SHEET 15 of 15 - COMBINED DEFLECTION ON MULTIPLE SPANS SHUTTERS

PRODUCT RENEWED
as complying with the Florida
Building Code
Acceptance No 08-0408.02
Expiration Date 04/10/13
By
Miami Dade Product Control
Division

MANUFACTURER:
Roller Star USA
1480 SW 6th COURT
BUILDING #1400
POMPANO BEACH
FLORIDA - 33069
TEL: (954) 972-4772
FAX: (954) 917-7392

Product:
RE1500
EXTRUDED ALUMINUM
ROLL SHUTTERS

Engineering:
EngCo Inc.
CA 8116
6971 W. Sunrise Blvd. 104
Plantation, Fl. 33313
Tel.: (954) 585-0304

FEB 27 2007

Engineer Seal
Pedro De Figueiredo
PE 52609

Date: 2/26/07
Scale: NA
Design by: PPMF

Dade County NOA:
PRODUCT REVIEWED
as complying with the Florida
Building Code
Acceptance No 05-0804.01
Expiration Date 04/10/08
Miami-Dade Product Control Division

Drawing Number
05-185R1

SHUTTER COMPONENTS

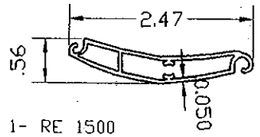

1- RE 1500
FEMALE SLAT - 6063-T5

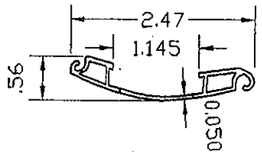

1A- RE 1500VP
WINDOW VIEW SLATS - 6063-T5

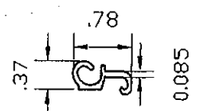

2- RE 1500
INTERMEDIATE SLAT - 6063-T5

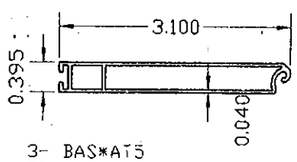

3- BAS*AT5
SILL SLAT - 6063-T5

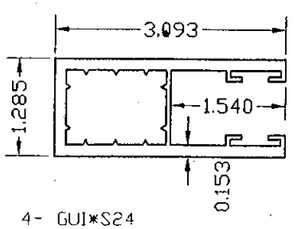

4- GUI*S24
GUIDE RAIL - 6063-T5

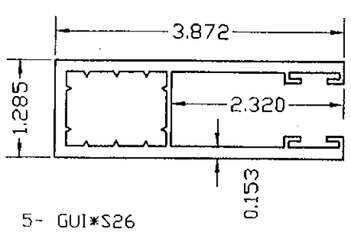

5- GUI*S26
GUIDE RAIL - 6063-T5

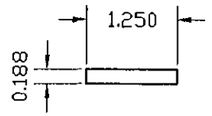

6- 3/16 X 1 1/4"
POLYCARBONATE SHEET

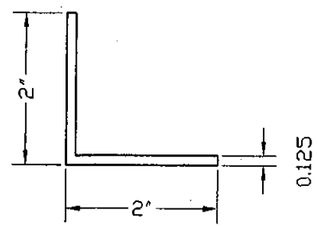

7- 1/8"-2X2 ALUMINUM ANGLE
7a- 3/16"-2X2 ALUMINUM ANGLE
7b- 1/4"-2X2 ALUMINUM ANGLE
6063-T5 OR 6063-T6

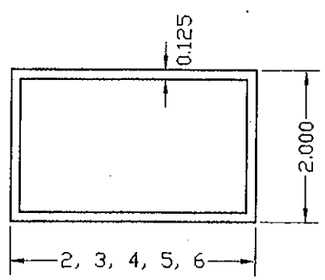

8- 1/8- 2X2, 8A- 1/8- 2X3
8B- 1/8- 2X4, 8C- 1/8- 2X5
8D- 1/8- 2X6
ALUMINUM TUBES - 6063-T6
(TO BE USED AS STORM BAR,
HEADER, MULLIONS AND BUILT-OUT)
* 1/8-2X6 TUBE IS NOT USED AS STORM BAR

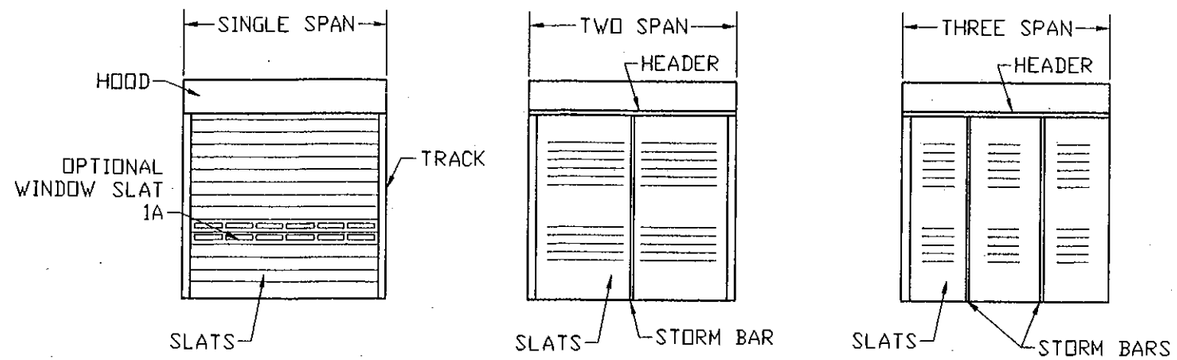

BASIC CONFIGURATIONS

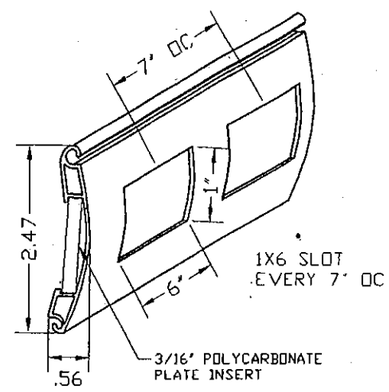

RE 1500VP WINDOW VIEW SLATS
.05 EXTRUDED ALUMINUM
6063-T5 Alloy
NOTE: MAXIMUM 2 SLATS PER DOOR

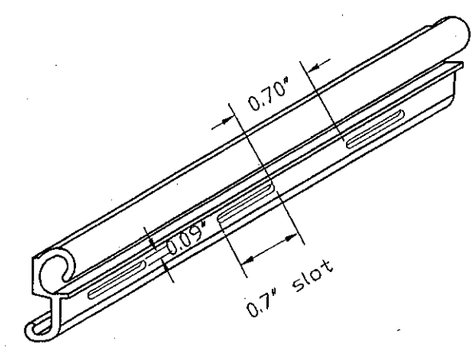

RE 1500 SLAT - SLOT CONFIGURATION
ALL INTERMEDIATE SLATS WITH SLOTS

PRODUCT RENEWED
as complying with the Florida
Building Code
Acceptance No 08-0408.02
Expiration Date 04/10/13
By M Khan
Miami Dade Product Control
Division

MANUFACTURER:
Roller Star USA
1480 SW 6th COURT
BUILDING #1400
POMPANO BEACH
FLORIDA - 33069
TEL: (954) 972-4772
FAX: (954) 917-7392

Product:
RE1500
EXTRUDED ALUMINUM
ROLL SHUTTERS

Engineering:
EngCo Inc.
CA 8116
6971 W. Sunrise Blvd. 104
Plantation, Fl. 33313
Tel.: (954) 585-0304

FEB 27 2007
Engineer Seal
Pedro De Figueiredo
PE 52609

Date: 2/26/07
Scale: NA
Design by: PPMF

Dade County NOA:
PRODUCT REVIEWED
05-0804.01
04/10/08
M Khan

Drawing Number
05-185R1

SLATS WINDLOAD DESIGN TABLES

TABLE 3. 1
MAXIMUM INSIDE TRACK (TT)
RE 1500 SHUTTER SLAT WITH
S24 GUIDE RAILS

PD	1 SPAN		2 SPAN		3 SPAN	
	out	in	out	in	out	in
30	84	77	168		252	
45	73	70	168		252	244
55	68	66	168	164	252	232
65	65	63	163	157	239	222
75	62	61	151		228	215
85	59		142		218	208
95	57		134		210	202
105	55		128		204	197
115	53		122		197	193
125	52		117		192	189
135	51		113		187	185
145	49		109		183	182
155	48		105		177	
165	47		102		171	
175	46		99		166	
185	45		96		162	
195	43		94		158	
210	40		90		149	

PD= Design load in Psf
Max. Deflection= min. of span/30 or 2"
Spans are indicated in inches
"Out" values for outward wind direction
"In" values for inward wind direction

(GS) GLASS SEPARATION:		
LARGE IMPACT	SPAN	WIND LOAD ONLY
3"	SPAN> 52"	3"
2 3/4"	40" < SPAN <=52"	2 3/4"
2 3/8"	SPAN <=40"	2 3/8"

GLASS SEPARATION FOR LARGE MISSILE IMPACT IS APPLICABLE FOR INSTALLATION UP TO 30 FT. OF GRADE DUE TO LARGE MISSILE IMPACT. WIND LOAD GLASS SEPARATION APPLIES TO INSTALLATION ABOVE 30 FT. OF GRADE.

PRODUCT RENEWED
as complying with the Florida
Building Code
Acceptance No 08-0408.02
Expiration Date 04/10/13
By M Thank
Miami Dade Product Control
Division

TABLE 3. 2
MAXIMUM INSIDE TRACK (TT)
RE 1500 SHUTTER SLAT WITH
S26 GUIDE RAILS

PD	1 SPAN		2 SPAN		3 SPAN	
	out	in	out	in	out	in
30	80	75	168		252	
45	70	67	168	167	252	236
55	66	64	168	159	242	225
65	62	61	155	153	229	216
75	59		144		219	208
85	57		135		210	202
95	55		128		202	196
105	53		122		195	191
115	51		116		189	187
125	50		111		184	183
135	49		107		180	
145	47		103		174	
155	46		100		168	
165	45		97		163	
175	44		94		158	
185	41		91		154	
195	39		89		147	
210	36		86		136	

PD= Design load in Psf
Max. Deflection= min. of span/30 or 2"
Spans are indicated in inches
"Out" values for outward wind direction
"In" values for inward wind direction

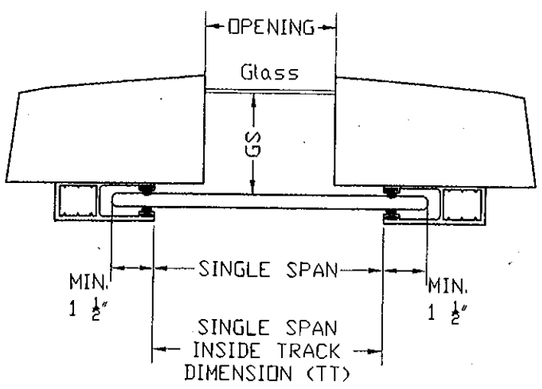

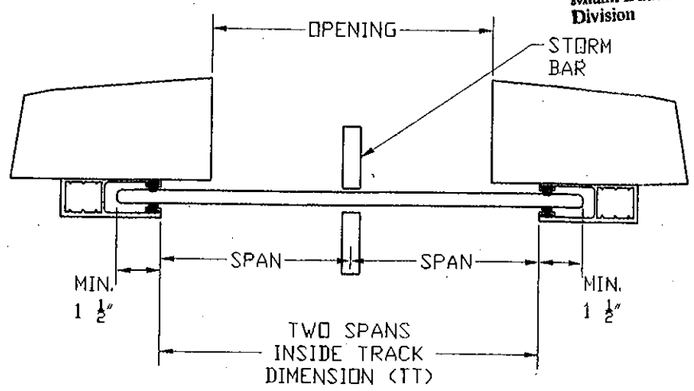

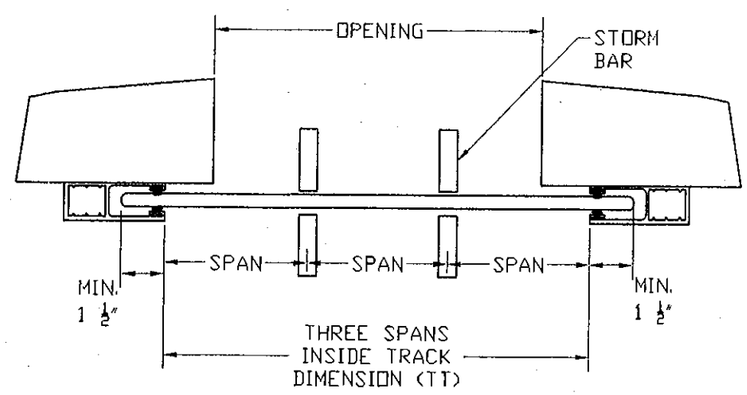

MANUFACTURER:
Roller Star USA
1480 SW 6th COURT
BUILDING #1400
POMPANO BEACH
FLORIDA - 33069
TEL: (954) 972-4772
FAX: (954) 917-7392

Product:
RE1500
EXTRUDED ALUMINUM
ROLL SHUTTERS

Engineering:
EngCo Inc.
CA 8116
6971 W. Sunrise Blvd. 104
Plantation, Fl. 33313
Tel.: (954) 585-0304

FEB 27 2007
Engineer Seal
Pedro De Figueiredo
PE 52609

Date: 2/26/07
Scale: NA
Design by: PPMF

Dade County NOA:
PRODUCT RENEWED
as complying with the Florida
Building Code
Acceptance No 05-0804.01
Expiration Date 04/10/08
M Thank
Miami Dade Product Control
Division

Drawing Number
05-185R1

GUIDE RAILS MOUNTING OPTIONS

MOUNT: WALL

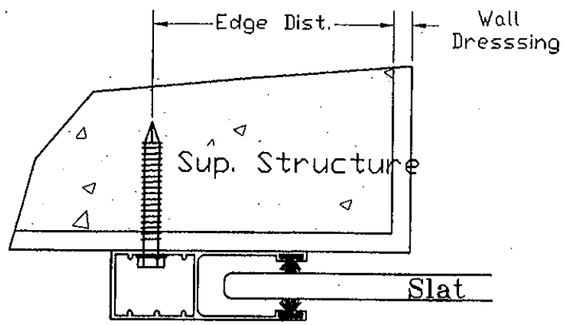

DESIGNED PRESSURES

	ANCHOR SPACING			
S24	12	9	6	3
ANCHOR A	45	65	145	<=210
ANCHOR B	na	na	30	<=115
ANCHOR C	45	75	145	<=210
S26	12	9	6	3
ANCHOR A	45	55	95	<=210
ANCHOR B	na	na	30	<= 85
ANCHOR C	30	55	105	<=210

MOUNT: INSET

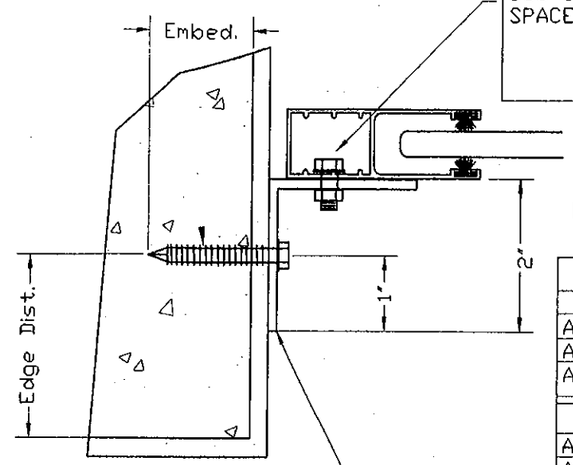

300 SERIES 1/4"-20 SS BOLT & NUT
SPACED: 3"OC UP TO 210 PSF
6"OC UP TO 155 PSF
9"OC UP TO 85 PSF
12"OC UP TO 55 PSF

DESIGNED PRESSURES

	ANCHOR SPACING			
S24	12	9	6	3
ANCHOR A	30	55	95	<=210
ANCHOR B	na	na	30	<=105
ANCHOR C	na	30	75	<=210
S26	12	9	6	3
ANCHOR A	na	45	85	<=210
ANCHOR B	na	na	30	<= 85
ANCHOR C	na	30	65	<=210

CONT. 2X2 ALUM. ANGLE DESIGN PRESSURE

	S24 Track		S26 Track	
Shape	6063-T5	6063-T6	6063-T5	6063-T6
1/8 -2x2	41	75	27	55
3/16-2x2	135	210	100	210
1/4 -2x2	210	-	210	-

Note: values controlled by the span vs pressure tables on sheet 3.

MOUNT: BUILT-OUT

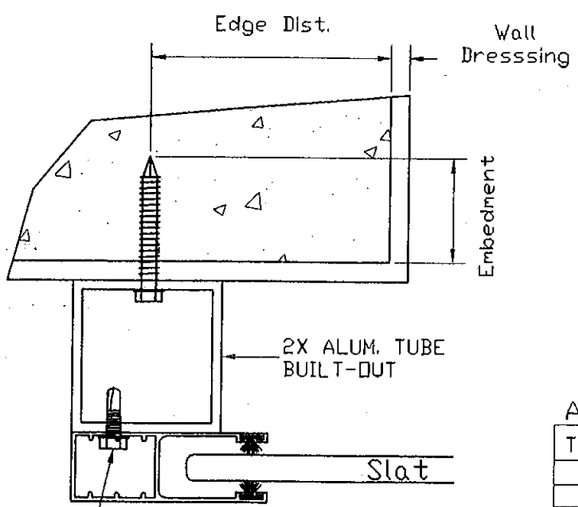

#14X1 SELF DRILLING SCREWS
SPACED: 3"OC UP TO 210 PSF
6"OC UP TO 155 PSF
9"OC UP TO 85 PSF
12"OC UP TO 55 PSF

DESIGNED PRESSURES

	ANCHOR SPACING			
S24	12	9	6	3
ANCHOR A	65	95	<=210	-
ANCHOR B	na	30	55	<=155
ANCHOR C	65	105	<=210	-
S26	12	9	6	3
ANCHOR A	45	65	135	<=210
ANCHOR B	na	na	30	<=115
ANCHOR C	45	75	145	<=210

ANCHORAGE NOTES:
1- ANCHOR SPACING IS CONTROLLED BY THE SPAN VS PRESSURE TABLES ON SHEET 3.
2- na - NOT AVAILABLE

ANCHOR SCHEDULE

Type	Description	Embedment	Substrate	Manufacturer
A	1/4" Tapcon	1 3/4"	3000 psi Concrete	Elco
B	1/4" Tapcon	1 1/4"	Hollow Block	Elco
C	#14 SS Wood Screws	2"	Wood (SG=.55)	Elco

EDGE DISTANCE =3"

PRODUCT RENEWED
as complying with the Florida Building Code
Acceptance No 08-0408.02
Expiration Date 04/10/13
By M Thak
Miami Dade Product Control Division

MANUFACTURER:
Roller Star USA
1480 SW 6th COURT
BUILDING #1400
POMPANO BEACH
FLORIDA - 33069
TEL: (954) 972-4772
FAX: (954) 917-7392

Product:
RE1500
EXTRUDED ALUMINUM ROLL SHUTTERS

Engineering:
EngCo Inc.
CA 8116
6971 W. Sunrise Blvd. 104
Plantation, Fl. 33313
Tel.: (954) 585-0304

FEB 27 2007

Engineer Seal
Pedro De Figueiredo
PE 52609

Date: 2/26/07
Scale: NA
Design by: PPMF

Dade County NOA:
PRODUCT REVIEWED
as complying with the Florida Building Code
Acceptance No. 05-0804.01
Expiration Date 04/10/08
By M Thak
Miami Dade Product Control Division

Drawing Number
05-185R1

STORM BAR SELECTION AND DEFLECTION TABLES

1/8 2X2 STORM BAR

MAXIMUM ALLOWABLE
STORM BAR HEIGHT
2 SPANS SHUTTER

	SHUTTER SPAN							
Pd	84	78	72	66	60	54	48	42
30	54	57	59	61	64	68	72	77
45	44	46	48	50	53	55	59	63
55	40	42	43	45	48	50	53	57
65	37	38	40	42	44	46	49	52
75	34	36	37	39	41	43	45	49
85	32	33	35	36	38	40	43	46
95	30	32	33	34	36	38	40	43
105	29	30	31	33	34	36	38	41
115	27	29	30	31	33	34	37	39
125	25	27	29	30	31	33	35	38
135	23	25	27	29	30	32	34	36
145	22	23	25	28	29	31	33	35
155	20	22	24	26	28	30	31	34
165	19	20	22	24	27	29	30	33
175	18	19	21	23	25	28	30	32
185	17	18	20	22	24	26	29	31
195	16	17	19	20	23	25	28	30
210	15	16	17	19	21	23	26	29

MAXIMUM ALLOWABLE
STORM BAR HEIGHT
3 SPANS SHUTTER

	SHUTTER SPAN							
Pd	84	78	72	66	60	54	48	42
30	58	60	63	66	69	73	77	82
45	40	43	47	51	56	59	63	67
55	33	35	38	42	46	51	57	61
65	28	30	32	35	39	43	49	56
75	24	26	28	30	33	37	42	48
85	21	23	24	27	29	33	37	42
95	19	20	22	24	26	29	33	38
105	17	18	20	22	24	26	30	34
115	15	17	18	20	22	24	27	31
125	14	15	16	18	20	22	25	29
135	13	14	15	17	18	20	23	26
145	12	13	14	15	17	19	21	25
155	11	12	13	14	16	18	20	23
165	11	11	12	14	15	17	19	22
175	10	11	12	13	14	16	18	20
185	9	10	11	12	13	15	17	19
195	9	10	10	11	13	14	16	18
210	8	9	10	11	12	13	15	17

STORM BAR MAXIMUM DEFLECTION
2 SPANS SHUTTER

	SHUTTER SPAN							
Pd	84	78	72	66	60	54	48	42
30	0.4	0.5	0.5	0.6	0.6	0.7	0.8	0.9
45	0.3	0.3	0.4	0.4	0.4	0.5	0.5	0.6
55	0.2	0.3	0.3	0.3	0.4	0.4	0.4	0.5
65	0.2	0.2	0.2	0.3	0.3	0.3	0.4	0.4
75	0.2	0.2	0.2	0.2	0.3	0.3	0.3	0.4
85	0.2	0.2	0.2	0.2	0.2	0.2	0.3	0.3
95	0.1	0.2	0.2	0.2	0.2	0.2	0.2	0.3
105	0.1	0.1	0.1	0.2	0.2	0.2	0.2	0.3
115	0.1	0.1	0.1	0.1	0.2	0.2	0.2	0.2
125	0.1	0.1	0.1	0.1	0.1	0.2	0.2	0.2
135	0.1	0.1	0.1	0.1	0.1	0.2	0.2	0.2
145	0.1	0.1	0.1	0.1	0.1	0.1	0.2	0.2
155	0.0	0.1	0.1	0.1	0.1	0.1	0.1	0.2
165	0.0	0.0	0.1	0.1	0.1	0.1	0.1	0.2
175	0.0	0.0	0.1	0.1	0.1	0.1	0.1	0.2
185	0.0	0.0	0.0	0.1	0.1	0.1	0.1	0.1
195	0.0	0.0	0.0	0.0	0.1	0.1	0.1	0.1
210	0.0	0.0	0.0	0.0	0.1	0.1	0.1	0.1

STORM BAR MAXIMUM DEFLECTION
3 SPANS SHUTTER

	SHUTTER SPAN							
Pd	84	78	72	66	60	54	48	42
30	0.5	0.5	0.6	0.7	0.7	0.8	0.9	1.0
45	0.2	0.2	0.3	0.4	0.5	0.5	0.6	0.7
55	0.1	0.1	0.1	0.2	0.3	0.4	0.5	0.6
65	0.1	0.1	0.1	0.1	0.2	0.2	0.3	0.5
75	0.0	0.0	0.1	0.1	0.1	0.1	0.2	0.3
85	0.0	0.0	0.0	0.1	0.1	0.1	0.1	0.2
95	0.0	0.0	0.0	0.0	0.0	0.1	0.1	0.2
105	0.0	0.0	0.0	0.0	0.0	0.0	0.1	0.1
115	0.0	0.0	0.0	0.0	0.0	0.0	0.1	0.1
125	0.0	0.0	0.0	0.0	0.0	0.0	0.0	0.1
135	0.0	0.0	0.0	0.0	0.0	0.0	0.0	0.0
145	0.0	0.0	0.0	0.0	0.0	0.0	0.0	0.0
155	0.0	0.0	0.0	0.0	0.0	0.0	0.0	0.0
165	0.0	0.0	0.0	0.0	0.0	0.0	0.0	0.0
175	0.0	0.0	0.0	0.0	0.0	0.0	0.0	0.0
185	0.0	0.0	0.0	0.0	0.0	0.0	0.0	0.0
195	0.0	0.0	0.0	0.0	0.0	0.0	0.0	0.0
210	0.0	0.0	0.0	0.0	0.0	0.0	0.0	0.0

DEFLECTION IN INCHES BASED ON MAX. STORM BAR HEIGHT
STORM BAR HEIGHT IN INCHES
Pd- DESIGNED PRESSURE IN PSF
SHUTTER SPAN IN INCHES

1/8 2X3 STORM BAR

MAXIMUM ALLOWABLE
STORM BAR HEIGHT
2 SPANS SHUTTER

	SHUTTER SPAN							
Pd	84	78	72	66	60	54	48	42
30	73	75	79	82	86	91	96	103
45	59	62	64	67	70	74	79	84
55	54	56	58	61	63	67	71	76
65	49	51	53	56	58	62	65	70
75	42	46	49	52	54	57	61	65
85	37	40	43	47	51	54	57	61
95	33	36	39	42	47	51	54	58
105	30	32	35	38	42	47	51	55
115	27	30	32	35	39	43	48	52
125	25	27	29	32	35	39	44	50
135	23	25	27	30	33	36	41	47
145	22	23	25	28	30	34	38	44
155	20	22	24	26	28	32	36	41
165	19	20	22	24	27	30	33	38
175	18	19	21	23	25	28	32	36
185	17	18	20	22	24	26	30	34
195	16	17	19	20	23	25	28	32
210	15	16	17	19	21	23	26	30

MAXIMUM ALLOWABLE
STORM BAR HEIGHT
3 SPANS SHUTTER

	SHUTTER SPAN							
Pd	84	78	72	66	60	54	48	42
30	60	65	70	77	84	94	103	110
45	40	43	47	51	56	62	70	80
55	33	35	38	42	46	51	57	66
65	28	30	32	35	39	43	49	56
75	24	26	28	30	33	37	42	48
85	21	23	24	27	29	33	37	42
95	19	20	22	24	26	29	33	38
105	17	18	20	22	24	26	30	34
115	15	17	18	20	22	24	27	31
125	14	15	16	18	20	22	25	29
135	13	14	15	17	18	20	23	26
145	12	13	14	15	17	19	21	25
155	11	12	13	14	16	18	20	23
165	11	11	12	14	15	17	19	22
175	10	11	12	13	14	16	18	20
185	9	10	11	12	13	15	17	19
195	9	10	10	11	13	14	16	18
210	8	9	10	11	12	13	15	17

STORM BAR MAXIMUM DEFLECTION
2 SPANS SHUTTER

	SHUTTER SPAN							
Pd	84	78	72	66	60	54	48	42
30	0.6	0.6	0.6	0.7	0.8	0.9	0.9	1.1
45	0.4	0.4	0.4	0.5	0.5	0.6	0.6	0.7
55	0.3	0.3	0.3	0.4	0.4	0.5	0.5	0.6
65	0.2	0.3	0.3	0.3	0.3	0.4	0.4	0.5
75	0.2	0.2	0.2	0.3	0.3	0.3	0.4	0.4
85	0.1	0.1	0.2	0.2	0.3	0.3	0.3	0.4
95	0.1	0.1	0.1	0.2	0.2	0.3	0.3	0.3
105	0.1	0.1	0.1	0.1	0.2	0.2	0.3	0.3
115	0.0	0.1	0.1	0.1	0.1	0.2	0.2	0.3
125	0.0	0.0	0.0	0.1	0.1	0.1	0.2	0.3
135	0.0	0.0	0.0	0.1	0.1	0.1	0.1	0.2
145	0.0	0.0	0.0	0.0	0.1	0.1	0.1	0.2
155	0.0	0.0	0.0	0.0	0.0	0.1	0.1	0.1
165	0.0	0.0	0.0	0.0	0.0	0.1	0.1	0.1
175	0.0	0.0	0.0	0.0	0.0	0.0	0.1	0.1
185	0.0	0.0	0.0	0.0	0.0	0.0	0.1	0.1
195	0.0	0.0	0.0	0.0	0.0	0.0	0.0	0.1
210	0.0	0.0	0.0	0.0	0.0	0.0	0.0	0.1

STORM BAR MAXIMUM DEFLECTION
3 SPANS SHUTTER

	SHUTTER SPAN							
Pd	84	78	72	66	60	54	48	42
30	0.2	0.3	0.4	0.5	0.6	0.9	1.1	1.2
45	0.1	0.1	0.1	0.1	0.2	0.2	0.4	0.5
55	0.0	0.0	0.1	0.1	0.1	0.1	0.2	0.3
65	0.0	0.0	0.0	0.0	0.1	0.1	0.1	0.2
75	0.0	0.0	0.0	0.0	0.0	0.1	0.1	0.1
85	0.0	0.0	0.0	0.0	0.0	0.0	0.1	0.1
95	0.0	0.0	0.0	0.0	0.0	0.0	0.0	0.1
105	0.0	0.0	0.0	0.0	0.0	0.0	0.0	0.0
115	0.0	0.0	0.0	0.0	0.0	0.0	0.0	0.0
125	0.0	0.0	0.0	0.0	0.0	0.0	0.0	0.0
135	0.0	0.0	0.0	0.0	0.0	0.0	0.0	0.0
145	0.0	0.0	0.0	0.0	0.0	0.0	0.0	0.0
155	0.0	0.0	0.0	0.0	0.0	0.0	0.0	0.0
165	0.0	0.0	0.0	0.0	0.0	0.0	0.0	0.0
175	0.0	0.0	0.0	0.0	0.0	0.0	0.0	0.0
185	0.0	0.0	0.0	0.0	0.0	0.0	0.0	0.0
195	0.0	0.0	0.0	0.0	0.0	0.0	0.0	0.0
210	0.0	0.0	0.0	0.0	0.0	0.0	0.0	0.0

DEFLECTION IN INCHES BASED ON MAX. STORM BAR HEIGHT
STORM BAR HEIGHT IN INCHES
Pd- DESIGNED PRESSURE IN PSF
SHUTTER SPAN IN INCHES

PRODUCT RENEWED
as complying with the Florida
Building Code
Acceptance No. 08-0408.02
Expiration Date 04/10/13
By M Khan
Miami Dade Product Control
Division

NOTE: STORM BARS ALLOWABLE HEIGHT ARE CONTROLLED BY THE MAXIMUM ALLOWABLE HEADER END REACTION.

MANUFACTURER:
Roller Star USA
1480 SW 6th COURT
BUILDING #1400
POMPANO BEACH
FLORIDA - 33069
TEL: (954) 972-4772
FAX: (954) 917-7392

Product:
RE1500
EXTRUDED ALUMINUM
ROLL SHUTTERS

Engineering:
EngCo Inc.
CA 8116
6971 W. Sunrise Blvd. 104
Plantation, Fl. 33313
Tel.: (954) 585-0304

FEB 27 200
Engineer Seal
Pedro De Figueiredo
PE 52609

Date: 2/26/07
Scale: NA
Design by: PPMF

Dade County NOA:
PRODUCT APPROVED
as complying with the Florida
Building Code
05-0804.01
04/10/08
M Khan

Drawing Number
05-185R1

STORM BAR SELECTION AND DEFLECTION TABLES

1/8 2X4 STORM BAR

MAXIMUM ALLOWABLE
STORM BAR HEIGHT
2 SPANS SHUTTER

	SHUTTER SPAN							
Pd	84	78	72	66	60	54	48	42
30	89	93	97	101	106	112	118	120
45	71	76	79	82	86	91	97	103
55	58	62	67	74	78	82	87	93
65	49	53	57	62	69	76	80	86
75	42	46	49	54	59	66	74	80
85	37	40	43	47	52	58	65	75
95	33	36	39	42	47	52	59	67
105	30	32	35	38	42	47	53	61
115	27	30	32	35	39	43	48	55
125	25	27	29	32	35	39	44	51
135	23	25	27	30	33	36	41	47
145	22	23	25	28	30	34	38	44
155	20	22	24	26	28	32	36	41
165	19	20	22	24	27	30	33	38
175	18	19	21	23	25	28	32	36
185	17	18	20	22	24	26	30	34
195	16	17	19	20	23	25	28	32
210	15	16	17	19	21	23	26	30

MAXIMUM ALLOWABLE
STORM BAR HEIGHT
3 SPANS SHUTTER

	SHUTTER SPAN							
Pd	84	78	72	66	60	54	48	42
30	60	65	70	77	84	94	106	120
45	40	43	47	51	56	62	70	80
55	33	35	38	42	46	51	57	66
65	28	30	32	35	39	43	49	56
75	24	26	28	30	33	37	42	48
85	21	23	24	27	29	33	37	42
95	19	20	22	24	26	29	33	38
105	17	18	20	22	24	26	30	34
115	15	17	18	20	22	24	27	31
125	14	15	16	18	20	22	25	29
135	13	14	15	17	18	20	23	26
145	12	13	14	15	17	19	21	25
155	11	12	13	14	16	18	20	23
165	11	11	12	14	15	17	19	22
175	10	11	12	13	14	16	18	20
185	9	10	11	12	13	15	17	19
195	9	10	10	11	13	14	16	18
210	8	9	10	11	12	13	15	17

STORM BAR MAXIMUM DEFLECTION
2 SPANS SHUTTER

	SHUTTER SPAN							
Pd	84	78	72	66	60	54	48	42
30	0.6	0.7	0.7	0.8	0.9	1.0	1.1	1.0
45	0.4	0.4	0.5	0.5	0.6	0.6	0.7	0.8
55	0.2	0.2	0.3	0.4	0.5	0.5	0.6	0.7
65	0.1	0.2	0.2	0.2	0.3	0.4	0.5	0.6
75	0.1	0.1	0.1	0.2	0.2	0.3	0.4	0.5
85	0.1	0.1	0.1	0.1	0.1	0.2	0.3	0.4
95	0.0	0.0	0.1	0.1	0.1	0.1	0.2	0.3
105	0.0	0.0	0.0	0.1	0.1	0.1	0.2	0.2
115	0.0	0.0	0.0	0.0	0.1	0.1	0.1	0.2
125	0.0	0.0	0.0	0.0	0.0	0.1	0.1	0.1
135	0.0	0.0	0.0	0.0	0.0	0.0	0.1	0.1
145	0.0	0.0	0.0	0.0	0.0	0.0	0.1	0.1
155	0.0	0.0	0.0	0.0	0.0	0.0	0.0	0.1
165	0.0	0.0	0.0	0.0	0.0	0.0	0.0	0.1
175	0.0	0.0	0.0	0.0	0.0	0.0	0.0	0.0
185	0.0	0.0	0.0	0.0	0.0	0.0	0.0	0.0
195	0.0	0.0	0.0	0.0	0.0	0.0	0.0	0.0
210	0.0	0.0	0.0	0.0	0.0	0.0	0.0	0.0

STORM BAR MAXIMUM DEFLECTION
3 SPANS SHUTTER

	SHUTTER SPAN							
Pd	84	78	72	66	60	54	48	42
30	0.1	0.1	0.2	0.2	0.3	0.4	0.6	0.9
45	0.0	0.0	0.1	0.1	0.1	0.1	0.2	0.3
55	0.0	0.0	0.0	0.0	0.0	0.1	0.1	0.1
65	0.0	0.0	0.0	0.0	0.0	0.0	0.1	0.1
75	0.0	0.0	0.0	0.0	0.0	0.0	0.0	0.1
85	0.0	0.0	0.0	0.0	0.0	0.0	0.0	0.0
95	0.0	0.0	0.0	0.0	0.0	0.0	0.0	0.0
105	0.0	0.0	0.0	0.0	0.0	0.0	0.0	0.0
115	0.0	0.0	0.0	0.0	0.0	0.0	0.0	0.0
125	0.0	0.0	0.0	0.0	0.0	0.0	0.0	0.0
135	0.0	0.0	0.0	0.0	0.0	0.0	0.0	0.0
145	0.0	0.0	0.0	0.0	0.0	0.0	0.0	0.0
155	0.0	0.0	0.0	0.0	0.0	0.0	0.0	0.0
165	0.0	0.0	0.0	0.0	0.0	0.0	0.0	0.0
175	0.0	0.0	0.0	0.0	0.0	0.0	0.0	0.0
185	0.0	0.0	0.0	0.0	0.0	0.0	0.0	0.0
195	0.0	0.0	0.0	0.0	0.0	0.0	0.0	0.0
210	0.0	0.0	0.0	0.0	0.0	0.0	0.0	0.0

DEFLECTION IN INCHES BASED ON MAX. STORM BAR HEIGHT
STORM BAR HEIGHT IN INCHES
Pd- DESIGNED PRESSURE IN PSF
SHUTTER SPAN IN INCHES

1/8 2X5 STORM BAR

MAXIMUM ALLOWABLE
STORM BAR HEIGHT
2 SPANS SHUTTER

	SHUTTER SPAN							
Pd	84	78	72	66	60	54	48	42
30	105	109	114	119	120	120	120	120
45	71	76	83	90	99	107	114	120
55	58	62	67	74	81	90	101	110
65	49	53	57	62	69	76	86	98
75	42	46	49	54	59	66	74	85
85	37	40	43	47	52	58	65	75
95	33	36	39	42	47	52	59	67
105	30	32	35	38	42	47	53	61
115	27	30	32	35	39	43	48	55
125	25	27	29	32	35	39	44	51
135	23	25	27	30	33	36	41	47
145	22	23	25	28	30	34	38	44
155	20	22	24	26	28	32	36	41
165	19	20	22	24	27	30	33	38
175	18	19	21	23	25	28	32	36
185	17	18	20	22	24	26	30	34
195	16	17	19	20	23	25	28	32
210	15	16	17	19	21	23	26	30

MAXIMUM ALLOWABLE
STORM BAR HEIGHT
3 SPANS SHUTTER

	SHUTTER SPAN							
Pd	84	78	72	66	60	54	48	42
30	60	65	70	77	84	94	106	120
45	40	43	47	51	56	62	70	80
55	33	35	38	42	46	51	57	66
65	28	30	32	35	39	43	49	56
75	24	26	28	30	33	37	42	48
85	21	23	24	27	29	33	37	42
95	19	20	22	24	26	29	33	38
105	17	18	20	22	24	26	30	34
115	15	17	18	20	22	24	27	31
125	14	15	16	18	20	22	25	29
135	13	14	15	17	18	20	23	26
145	12	13	14	15	17	19	21	25
155	11	12	13	14	16	18	20	23
165	11	11	12	14	15	17	19	22
175	10	11	12	13	14	16	18	20
185	9	10	11	12	13	15	17	19
195	9	10	10	11	13	14	16	18
210	8	9	10	11	12	13	15	17

STORM BAR MAXIMUM DEFLECTION
2 SPANS SHUTTER

	SHUTTER SPAN							
Pd	84	78	72	66	60	54	48	42
30	0.7	0.7	0.8	0.9	0.8	0.7	0.6	0.6
45	0.2	0.3	0.3	0.4	0.6	0.7	0.8	0.9
55	0.1	0.1	0.2	0.2	0.3	0.4	0.6	0.7
65	0.1	0.1	0.1	0.1	0.2	0.3	0.4	0.5
75	0.0	0.1	0.1	0.1	0.1	0.2	0.2	0.4
85	0.0	0.0	0.0	0.1	0.1	0.1	0.2	0.2
95	0.0	0.0	0.0	0.0	0.1	0.1	0.1	0.2
105	0.0	0.0	0.0	0.0	0.0	0.1	0.1	0.1
115	0.0	0.0	0.0	0.0	0.0	0.0	0.1	0.1
125	0.0	0.0	0.0	0.0	0.0	0.0	0.0	0.1
135	0.0	0.0	0.0	0.0	0.0	0.0	0.0	0.1
145	0.0	0.0	0.0	0.0	0.0	0.0	0.0	0.0
155	0.0	0.0	0.0	0.0	0.0	0.0	0.0	0.0
165	0.0	0.0	0.0	0.0	0.0	0.0	0.0	0.0
175	0.0	0.0	0.0	0.0	0.0	0.0	0.0	0.0
185	0.0	0.0	0.0	0.0	0.0	0.0	0.0	0.0
195	0.0	0.0	0.0	0.0	0.0	0.0	0.0	0.0
210	0.0	0.0	0.0	0.0	0.0	0.0	0.0	0.0

STORM BAR MAXIMUM DEFLECTION
3 SPANS SHUTTER

	SHUTTER SPAN							
Pd	84	78	72	66	60	54	48	42
30	0.1	0.1	0.1	0.1	0.2	0.2	0.3	0.5
45	0.0	0.0	0.0	0.0	0.1	0.1	0.1	0.1
55	0.0	0.0	0.0	0.0	0.0	0.0	0.1	0.1
65	0.0	0.0	0.0	0.0	0.0	0.0	0.0	0.1
75	0.0	0.0	0.0	0.0	0.0	0.0	0.0	0.0
85	0.0	0.0	0.0	0.0	0.0	0.0	0.0	0.0
95	0.0	0.0	0.0	0.0	0.0	0.0	0.0	0.0
105	0.0	0.0	0.0	0.0	0.0	0.0	0.0	0.0
115	0.0	0.0	0.0	0.0	0.0	0.0	0.0	0.0
125	0.0	0.0	0.0	0.0	0.0	0.0	0.0	0.0
135	0.0	0.0	0.0	0.0	0.0	0.0	0.0	0.0
145	0.0	0.0	0.0	0.0	0.0	0.0	0.0	0.0
155	0.0	0.0	0.0	0.0	0.0	0.0	0.0	0.0
165	0.0	0.0	0.0	0.0	0.0	0.0	0.0	0.0
175	0.0	0.0	0.0	0.0	0.0	0.0	0.0	0.0
185	0.0	0.0	0.0	0.0	0.0	0.0	0.0	0.0
195	0.0	0.0	0.0	0.0	0.0	0.0	0.0	0.0
210	0.0	0.0	0.0	0.0	0.0	0.0	0.0	0.0

DEFLECTION IN INCHES BASED ON MAX. STORM BAR HEIGHT
STORM BAR HEIGHT IN INCHES
Pd- DESIGNED PRESSURE IN PSF
SHUTTER SPAN IN INCHES

NOTE: STORM BARS ALLOWABLE HEIGHT ARE CONTROLLED BY THE MAXIMUM ALLOWABLE HEADER END REACTION.

PRODUCT RENEWED
as complying with the Florida Building Code
Acceptance No 08-0408.02
Expiration Date 04/10/13
By M Khalil
Miami Dade Product Control Division

MANUFACTURER:
Roller Star USA
1480 SW 6th COURT
BUILDING #1400
POMPANO BEACH
FLORIDA - 33069
TEL: (954) 972-4772
FAX: (954) 917-7392

Product:
RE1500
EXTRUDED ALUMINUM
ROLL SHUTTERS

Engineering:
EngCo Inc.
CA 8116
6971 W. Sunrise Blvd. 104
Plantation, Fl. 33313
Tel.: (954) 585-0304

FEB 27 2007
Engineer Seal
Pedro De Figueiredo
PE 52609

Date: 2/26/07
Scale: NA
Design by: PPMF

Dade County NOA:
05-0804.04
04/10/08
M Khalil

Drawing Number
05-185R1

STORM BAR ANCHORAGE

WALL MOUNTED STORM BARS ANCHORED TO CONCRETE OR WOOD

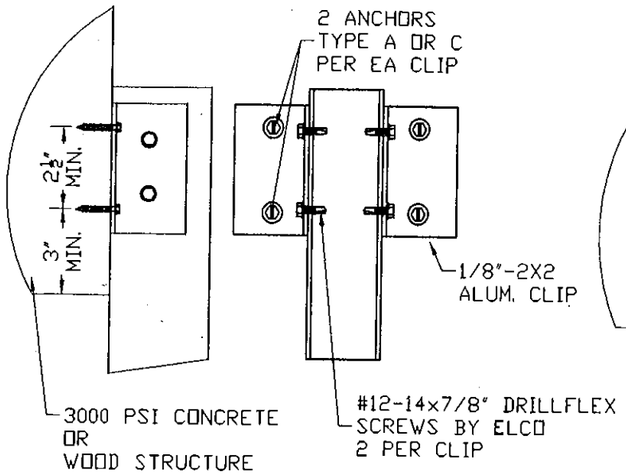

WALL MOUNTED STORM BARS ANCHORED TO HOLLOW BLOCK WALL

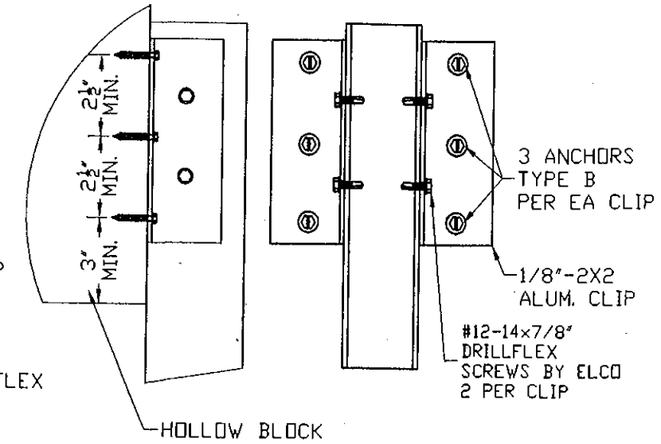

FLOOR/CEILING MOUNTED STORM BARS ANCHORED TO CONCRETE SLAB

FIGURE 1

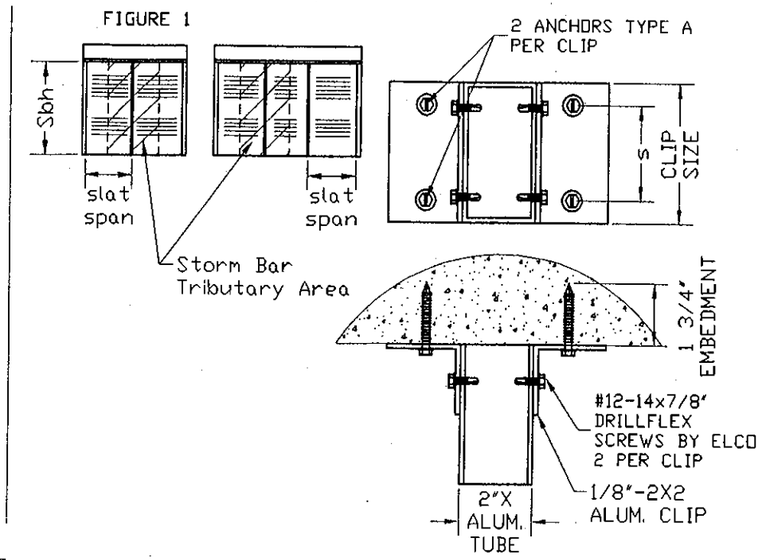

GENERAL NOTE:
ALL ANCHORAGE IS CONTROLLED BY THE MAXIMUM STORM BAR HEIGHT SELECTION TABLES ON SHEETS 5 AND 6

ANCHOR SCHEDULE

Type	Description	Embed.	Substract	Manufacturer
A	1/4" Tapcon	1 3/4"	Concrete	Elco
B	1/4" Tapcon	1 1/4"	Hollow Block	Elco
C	#14 SS Wood Screws	2"	Wood (SG=.55)	Elco

EDGE DISTANCE =3"

TABLE 1
ALLOWABLE DESIGNED PRESSURES (PSF)

	2 SPAN-CLIP SIZE				3 SPAN-CLIP SIZE			
AREA	2	3	4	5	2	3	4	5
10	79	123	184	204	90	139	209	232
15	53	82	122	136	60	93	139	154
20	39	61	92	102	45	70	104	116
30	26	41	61	68	30	46	70	77
35	23	35	52	58	26	40	60	66
40	20	31	46	51	22	35	52	58
s	1.5	2.0	3.0	4.0	1.5	2.0	3.0	4.0

NOTES:
1- USE 2 ANCHORS PER CLIP
2- AREA: SEE FIGURE 1 TO CALCULATE AREA
3- USE ANCHOR TYPE A.

PRODUCT RENEWED
as complying with the Florida Building Code
Acceptance No 08-0409.02
Expiration Date 04/10/13
By M Khaik
Miami Dade Product Control Division

STORM BARS MOUNTED ON BUILT-OUT ALUM. TUBE AND SHUTTER HEADER

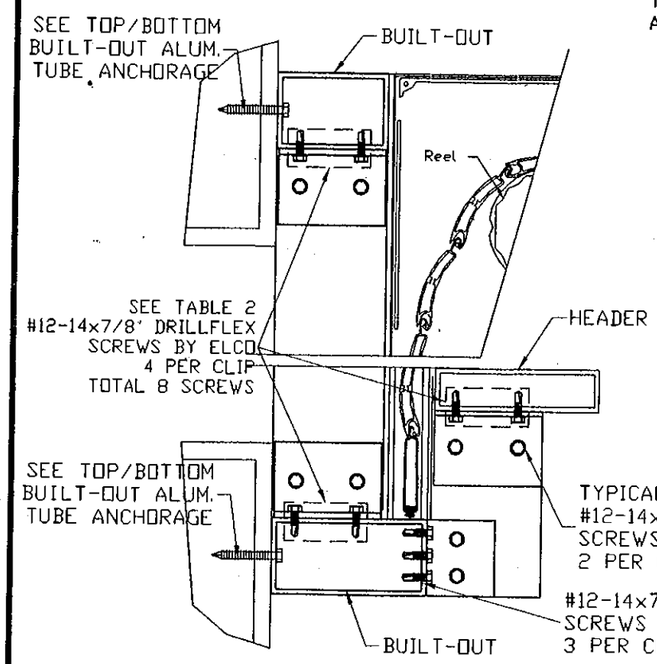

TABLE 2
ALLOWABLE DESIGNED PRESSURES (Psf)

Clip Size	Pd Psf	(s)
2"	<= 75	1.5"
3"	<=210	2.5"
4"	<=210	3.0"
5"	<=210	4.0"

Pd Allowable designed pressure

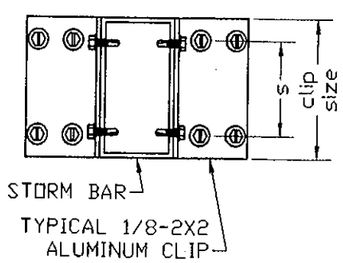

TOP/BOTTOM BUILT-OUT ALUMINUM TUBE ANCHORAGE

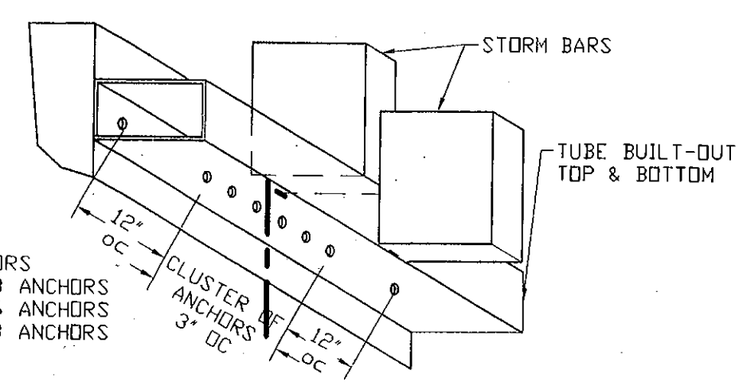

CLUSTER OF ANCHORS
TYPE A- MIN. OF 3 ANCHORS
TYPE B- MIN. OF 6 ANCHORS
TYPE C- MIN. OF 3 ANCHORS

MANUFACTURER:
Roller Star USA
1480 SW 6th COURT
BUILDING #1400
POMPANO BEACH
FLORIDA - 33069
TEL: (954) 972-4772
FAX: (954) 917-7392

Product:
RE1500
EXTRUDED ALUMINUM ROLL SHUTTERS

Engineering:
EngCo Inc.
CA 8116
6971 W. Sunrise Blvd. 104
Plantation, Fl. 33313
Tel.: (954) 585-0304

FEB 27 2007

Engineer Seal
Pedro De Figueiredo
PE 52609

Date: 2/26/07
Scale: NA
Design by: PPMF

Dade County NOA:
05-0804.01
04/10/08
M Khaik

Drawing Number
05-185R1

HEADER SELECTION AND DEFLECTION TABLES

1/8 2X2 STORM BAR

HEADER SELECTION
2 SPANS SHUTTER

	SHUTTER SPAN							
Pd	84	78	72	66	60	54	48	42
30	2X5	2X5	2X4	2X4	2X4	2X3	2X3	2X3
45	2X5	2X5	2X5	2X4	2X4	2X4	2X3	2X3
55	2X6	2X5	2X5	2X5	2X4	2X4	2X3	2X3
65	2X6	2X6	2X5	2X5	2X4	2X4	2X4	2X3
75	2X6	2X6	2X6	2X5	2X5	2X4	2X4	2X3
85	NA	2X6	2X6	2X5	2X5	2X4	2X4	2X4
95	NA	2X6	2X6	2X5	2X5	2X5	2X4	2X4
105	NA	NA	2X6	2X6	2X5	2X5	2X4	2X4
115	NA	NA	2X6	2X6	2X5	2X5	2X4	2X4
125	NA	NA	2X6	2X6	2X5	2X5	2X4	2X4
135	NA	NA	2X6	2X6	2X6	2X5	2X5	2X4
145	NA	NA	2X6	2X6	2X6	2X5	2X5	2X4
155	NA	NA	NA	2X6	2X6	2X5	2X5	2X4
165	NA	NA	2X6	2X6	2X6	2X5	2X5	2X4
175	NA	NA	2X6	2X6	2X6	2X5	2X5	2X4
185	NA	NA	NA	2X6	2X6	2X5	2X5	2X4
195	NA	NA	NA	2X6	2X6	2X5	2X5	2X5
210	NA	NA	2X6	2X6	2X6	2X5	2X5	2X5

HEADER SELECTION
3 SPANS SHUTTER

	SHUTTER SPAN							
Pd	84	78	72	66	60	54	48	42
30	NA	NA	NA	2X6	2X5	2X5	2X4	2X4
45	NA	NA	NA	2X6	2X6	2X5	2X5	2X4
55	NA	NA	NA	2X6	2X6	2X6	2X5	2X5
65	NA	NA	NA	2X6	2X6	2X5	2X5	2X5
75	NA	NA	NA	2X6	2X6	2X5	2X5	2X5
85	NA	NA	NA	2X6	2X6	2X6	2X5	2X5
95	NA	NA	NA	2X6	2X6	2X5	2X5	2X5
105	NA	NA	NA	2X6	2X6	2X5	2X5	2X5
115	NA	NA	NA	2X6	2X6	2X5	2X5	2X5
125	NA	NA	NA	2X6	2X6	2X5	2X5	2X5
135	NA	NA	NA	2X6	2X6	2X5	2X5	2X5
145	NA	NA	NA	2X6	2X6	2X5	2X5	2X5
155	NA	NA	NA	2X6	2X6	2X5	2X5	2X5
165	NA	NA	NA	2X6	2X6	2X6	2X5	2X5
175	NA	NA	NA	2X6	2X6	2X5	2X5	2X5
185	NA	NA	NA	2X6	2X6	2X5	2X5	2X5
195	NA	NA	NA	2X6	2X6	2X5	2X5	2X5
210	NA	NA	NA	2X6	2X6	2X5	2X5	2X5

MAXIMUM HEADER DEFLECTION
2 SPANS SHUTTER

	SHUTTER SPAN							
Pd	84	78	72	66	60	54	48	42
30	1.1	0.9	1.2	0.8	0.6	0.9	0.6	0.4
45	1.4	1.1	0.8	1.0	0.8	0.5	0.7	0.4
55	1.0	1.2	0.9	0.7	0.8	0.6	0.8	0.5
65	1.0	0.8	1.0	0.7	0.9	0.6	0.4	0.5
75	1.1	0.9	0.7	0.8	0.6	0.7	0.4	0.6
85	NA	0.9	0.7	0.8	0.6	0.7	0.5	0.3
95	NA	1.0	0.7	0.9	0.6	0.4	0.5	0.3
105	NA	NA	0.8	0.6	0.6	0.4	0.5	0.3
115	NA	NA	0.8	0.6	0.7	0.5	0.5	0.3
125	NA	NA	0.9	0.6	0.7	0.5	0.6	0.4
135	NA	NA	0.9	0.6	0.5	0.5	0.3	0.4
145	NA	NA	0.9	0.7	0.5	0.5	0.4	0.4
155	NA	NA	NA	0.7	0.5	0.6	0.4	0.4
165	NA	NA	0.9	0.7	0.5	0.6	0.4	0.4
175	NA	NA	0.9	0.7	0.5	0.6	0.4	0.4
185	NA	NA	NA	0.7	0.5	0.6	0.4	0.4
195	NA	NA	NA	0.6	0.5	0.6	0.4	0.3
210	NA	NA	0.8	0.7	0.5	0.6	0.4	0.3

MAXIMUM HEADER DEFLECTION
3 SPANS SHUTTER

	SHUTTER SPAN							
Pd	84	78	72	66	60	54	48	42
30	NA	NA	NA	1.7	1.9	1.3	1.5	0.9
45	NA	NA	NA	1.9	1.4	1.6	1.1	1.2
55	NA	NA	NA	1.9	1.4	1.1	1.2	0.7
65	NA	NA	NA	1.9	1.5	1.7	1.2	0.8
75	NA	NA	NA	1.9	1.4	1.7	1.2	0.8
85	NA	NA	NA	1.9	1.4	1.1	1.2	0.8
95	NA	NA	NA	1.9	1.4	1.6	1.2	0.8
105	NA	NA	NA	1.9	1.4	1.6	1.2	0.8
115	NA	NA	NA	1.9	1.4	1.7	1.2	0.8
125	NA	NA	NA	1.9	1.4	1.6	1.2	0.8
135	NA	NA	NA	1.9	1.4	1.6	1.2	0.8
145	NA	NA	NA	1.8	1.4	1.6	1.1	0.8
155	NA	NA	NA	1.8	1.4	1.7	1.2	0.8
165	NA	NA	NA	1.9	1.4	1.1	1.2	0.8
175	NA	NA	NA	1.9	1.4	1.7	1.2	0.8
185	NA	NA	NA	1.9	1.4	1.7	1.2	0.8
195	NA	NA	NA	1.8	1.5	1.6	1.2	0.8
210	NA	NA	NA	1.9	1.4	1.6	1.2	0.8

DEFLECTION IN INCHES BASED ON HEADER SELECTION
Pd- DESIGNED PRESSURE IN PSF
SHUTTER SPAN IN INCHES

1/8 2X3 STORM BAR

HEADER SELECTION
2 SPANS SHUTTER

	SHUTTER SPAN							
Pd	84	78	72	66	60	54	48	42
30	2X6	2X5	2X5	2X5	2X4	2X4	2X3	2X3
45	2X6	2X6	2X6	2X5	2X5	2X4	2X4	2X3
55	NA	2X6	2X6	2X6	2X5	2X5	2X4	2X4
65	NA	NA	2X6	2X6	2X5	2X5	2X4	2X4
75	NA	NA	2X6	2X6	2X6	2X5	2X5	2X4
85	NA	NA	2X6	2X6	2X6	2X5	2X5	2X4
95	NA	NA	NA	2X6	2X6	2X5	2X5	2X4
105	NA	NA	2X6	2X6	2X6	2X6	2X5	2X4
115	NA	NA	2X6	2X6	2X6	2X6	2X5	2X5
125	NA	NA	2X6	2X6	2X6	2X5	2X5	2X5
135	NA	NA	2X6	2X6	2X6	2X5	2X5	2X5
145	NA	NA	2X6	2X6	2X6	2X5	2X5	2X5
155	NA	NA	NA	2X6	2X6	2X6	2X5	2X5
165	NA	NA	2X6	2X6	2X6	2X6	2X5	2X5
175	NA	NA	2X6	2X6	2X6	2X5	2X5	2X5
185	NA	NA	NA	2X6	2X6	2X5	2X5	2X5
195	NA	NA	NA	2X6	2X6	2X5	2X5	2X5
210	NA	NA	2X6	2X6	2X6	2X5	2X5	2X5

HEADER SELECTION
3 SPANS SHUTTER

	SHUTTER SPAN							
Pd	84	78	72	66	60	54	48	42
30	NA	NA	NA	2X6	2X6	2X6	2X5	2X4
45	NA	NA	NA	2X6	2X6	2X5	2X5	2X5
55	NA	NA	NA	2X6	2X6	2X6	2X5	2X5
65	NA	NA	NA	2X6	2X6	2X5	2X5	2X5
75	NA	NA	NA	2X6	2X6	2X5	2X5	2X5
85	NA	NA	NA	2X6	2X6	2X6	2X5	2X5
95	NA	NA	NA	2X6	2X6	2X5	2X5	2X5
105	NA	NA	NA	2X6	2X6	2X5	2X5	2X5
115	NA	NA	NA	2X6	2X6	2X5	2X5	2X5
125	NA	NA	NA	2X6	2X6	2X5	2X5	2X5
135	NA	NA	NA	2X6	2X6	2X5	2X5	2X5
145	NA	NA	NA	2X6	2X6	2X5	2X5	2X5
155	NA	NA	NA	2X6	2X6	2X5	2X5	2X5
165	NA	NA	NA	2X6	2X6	2X6	2X5	2X5
175	NA	NA	NA	2X6	2X6	2X5	2X5	2X5
185	NA	NA	NA	2X6	2X6	2X5	2X5	2X5
195	NA	NA	NA	2X6	2X6	2X5	2X5	2X5
210	NA	NA	NA	2X6	2X6	2X5	2X5	2X5

MAXIMUM HEADER DEFLECTION
2 SPANS SHUTTER

	SHUTTER SPAN							
Pd	84	78	72	66	60	54	48	42
30	1.0	1.2	0.9	0.6	0.8	0.6	0.8	0.5
45	1.2	0.9	0.7	0.8	0.6	0.7	0.5	0.6
55	NA	1.0	0.7	0.6	0.6	0.4	0.5	0.3
65	NA	NA	0.8	0.6	0.7	0.5	0.5	0.3
75	NA	NA	0.9	0.6	0.5	0.5	0.3	0.4
85	NA	NA	0.9	0.7	0.5	0.5	0.4	0.4
95	NA	NA	NA	0.7	0.5	0.6	0.4	0.4
105	NA	NA	0.9	0.7	0.5	0.4	0.4	0.4
115	NA	NA	0.9	0.7	0.5	0.4	0.4	0.3
125	NA	NA	0.9	0.7	0.5	0.6	0.4	0.3
135	NA	NA	0.9	0.7	0.5	0.6	0.4	0.3
145	NA	NA	0.9	0.7	0.5	0.6	0.4	0.3
155	NA	NA	NA	0.7	0.5	0.4	0.4	0.3
165	NA	NA	0.9	0.7	0.5	0.4	0.4	0.3
175	NA	NA	0.9	0.7	0.5	0.6	0.4	0.3
185	NA	NA	NA	0.7	0.5	0.6	0.4	0.3
195	NA	NA	NA	0.6	0.5	0.6	0.4	0.3
210	NA	NA	0.8	0.7	0.5	0.6	0.4	0.3

MAXIMUM HEADER DEFLECTION
3 SPANS SHUTTER

	SHUTTER SPAN							
Pd	84	78	72	66	60	54	48	42
30	NA	NA	NA	1.9	1.4	1.1	1.2	1.3
45	NA	NA	NA	1.9	1.4	1.7	1.2	0.8
55	NA	NA	NA	1.9	1.4	1.1	1.2	0.8
65	NA	NA	NA	1.9	1.5	1.7	1.2	0.8
75	NA	NA	NA	1.9	1.4	1.7	1.2	0.8
85	NA	NA	NA	1.9	1.4	1.1	1.2	0.8
95	NA	NA	NA	1.9	1.4	1.6	1.2	0.8
105	NA	NA	NA	1.9	1.4	1.6	1.2	0.8
115	NA	NA	NA	1.9	1.4	1.7	1.2	0.8
125	NA	NA	NA	1.9	1.4	1.6	1.2	0.8
135	NA	NA	NA	1.9	1.4	1.6	1.2	0.8
145	NA	NA	NA	1.8	1.4	1.6	1.1	0.8
155	NA	NA	NA	1.8	1.4	1.7	1.2	0.8
165	NA	NA	NA	1.9	1.4	1.1	1.2	0.8
175	NA	NA	NA	1.9	1.4	1.7	1.2	0.8
185	NA	NA	NA	1.9	1.4	1.7	1.2	0.8
195	NA	NA	NA	1.8	1.5	1.6	1.2	0.8
210	NA	NA	NA	1.9	1.4	1.6	1.2	0.8

DEFLECTION IN INCHES BASED ON HEADER SELECTION
Pd- DESIGNED PRESSURE IN PSF
SHUTTER SPAN IN INCHES

NOTE: HEADER SELECTION AND DEFLECTION ARE CONTROLLED BY THE MAXIMUM ALLOWABLE STORM BARS HEIGHT TABLES ON SHEETS 5 AND 6

PRODUCT RENEWED
as complying with the Florida Building Code
Acceptance No 08-0408.02
Expiration Date 04/10/13
By M Thakr
Miami Dade Product Control Division

MANUFACTURER:
Roller Star USA
1480 SW 6th COURT
BUILDING #1400
POMPANO BEACH
FLORIDA - 33069
TEL: (954) 972-4772
FAX: (954) 917-7392

Product:
RE1500
EXTRUDED ALUMINUM ROLL SHUTTERS

Engineering:
EngCo Inc.
CA 8116
6971 W. Sunrise Blvd. 104
Plantation, Fl. 33313
Tel.: (954) 585-0304

FEB 27 2007

Engineer Seal
Pedro De Figueiredo
PE 52609

Date: 2/26/07
Scale: NA
Design by: PPMF

Dade County NOA:
05-0804.01
04/10/08
M Thakr

Drawing Number
05-185R1

HEADER SELECTION AND DEFLECTION TABLES

1/8 2X4 STORM BAR

HEADER SELECTION
2 SPANS SHUTTER

	SHUTTER SPAN							
Pd	84	78	72	66	60	54	48	42
30	2X6	2X6	2X6	2X5	2X5	2X4	2X4	2X3
45	NA	NA	2X6	2X6	2X5	2X5	2X4	2X4
55	NA	NA	NA	2X6	2X6	2X5	2X5	2X4
65	NA	NA	NA	2X6	2X6	2X6	2X5	2X4
75	NA	NA	2X6	2X6	2X6	2X6	2X5	2X5
85	NA	NA	2X6	2X6	2X6	2X5	2X5	2X5
95	NA	NA	NA	2X6	2X6	2X6	2X5	2X5
105	NA	NA	2X6	2X6	2X6	2X6	2X5	2X5
115	NA	NA	2X6	2X6	2X6	2X6	2X5	2X5
125	NA	NA	2X6	2X6	2X6	2X5	2X5	2X5
135	NA	NA	2X6	2X6	2X6	2X5	2X5	2X5
145	NA	NA	2X6	2X6	2X6	2X5	2X5	2X5
155	NA	NA	NA	2X6	2X6	2X6	2X5	2X5
165	NA	NA	2X6	2X6	2X6	2X6	2X5	2X5
175	NA	NA	2X6	2X6	2X6	2X5	2X5	2X5
185	NA	NA	NA	2X6	2X6	2X5	2X5	2X5
195	NA	NA	NA	2X6	2X6	2X5	2X5	2X5
210	NA	NA	2X6	2X6	2X6	2X5	2X5	2X5

HEADER SELECTION
3 SPANS SHUTTER

	SHUTTER SPAN							
Pd	84	78	72	66	60	54	48	42
30	NA	NA	NA	2X6	2X6	2X6	2X5	2X5
45	NA	NA	NA	2X6	2X6	2X5	2X5	2X5
55	NA	NA	NA	2X6	2X6	2X6	2X5	2X5
65	NA	NA	NA	2X6	2X6	2X5	2X5	2X5
75	NA	NA	NA	2X6	2X6	2X5	2X5	2X5
85	NA	NA	NA	2X6	2X6	2X6	2X5	2X5
95	NA	NA	NA	2X6	2X6	2X5	2X5	2X5
105	NA	NA	NA	2X6	2X6	2X5	2X5	2X5
115	NA	NA	NA	2X6	2X6	2X5	2X5	2X5
125	NA	NA	NA	2X6	2X6	2X5	2X5	2X5
135	NA	NA	NA	2X6	2X6	2X5	2X5	2X5
145	NA	NA	NA	2X6	2X6	2X5	2X5	2X5
155	NA	NA	NA	2X6	2X6	2X5	2X5	2X5
165	NA	NA	NA	2X6	2X6	2X6	2X5	2X5
175	NA	NA	NA	2X6	2X6	2X5	2X5	2X5
185	NA	NA	NA	2X6	2X6	2X5	2X5	2X5
195	NA	NA	NA	2X6	2X6	2X5	2X5	2X5
210	NA	NA	NA	2X6	2X6	2X5	2X5	2X5

MAXIMUM HEADER DEFLECTION
2 SPANS SHUTTER

	SHUTTER SPAN							
Pd	84	78	72	66	60	54	48	42
30	1.2	0.9	0.7	0.8	0.6	0.7	0.5	0.6
45	NA	NA	0.8	0.6	0.7	0.5	0.6	0.4
55	NA	NA	NA	0.7	0.5	0.5	0.4	0.4
65	NA	NA	NA	0.7	0.5	0.4	0.4	0.4
75	NA	NA	0.9	0.7	0.5	0.4	0.4	0.3
85	NA	NA	0.9	0.7	0.5	0.6	0.4	0.3
95	NA	NA	NA	0.7	0.5	0.4	0.4	0.3
105	NA	NA	0.9	0.7	0.5	0.4	0.4	0.3
115	NA	NA	0.9	0.7	0.5	0.4	0.4	0.3
125	NA	NA	0.9	0.7	0.5	0.6	0.4	0.3
135	NA	NA	0.9	0.7	0.5	0.6	0.4	0.3
145	NA	NA	0.9	0.7	0.5	0.6	0.4	0.3
155	NA	NA	NA	0.7	0.5	0.4	0.4	0.3
165	NA	NA	0.9	0.7	0.5	0.4	0.4	0.3
175	NA	NA	0.9	0.7	0.5	0.6	0.4	0.3
185	NA	NA	NA	0.7	0.5	0.6	0.4	0.3
195	NA	NA	NA	0.6	0.5	0.6	0.4	0.3
210	NA	NA	0.8	0.7	0.5	0.6	0.4	0.3

MAXIMUM HEADER DEFLECTION
3 SPANS SHUTTER

	SHUTTER SPAN							
Pd	84	78	72	66	60	54	48	42
30	NA	NA	NA	1.9	1.4	1.1	1.2	0.8
45	NA	NA	NA	1.9	1.4	1.7	1.2	0.8
55	NA	NA	NA	1.9	1.4	1.1	1.2	0.8
65	NA	NA	NA	1.9	1.5	1.7	1.2	0.8
75	NA	NA	NA	1.9	1.4	1.7	1.2	0.8
85	NA	NA	NA	1.9	1.4	1.1	1.2	0.8
95	NA	NA	NA	1.9	1.4	1.6	1.2	0.8
105	NA	NA	NA	1.9	1.4	1.6	1.2	0.8
115	NA	NA	NA	1.9	1.4	1.7	1.2	0.8
125	NA	NA	NA	1.9	1.4	1.6	1.2	0.8
135	NA	NA	NA	1.9	1.4	1.6	1.2	0.8
145	NA	NA	NA	1.8	1.4	1.6	1.1	0.8
155	NA	NA	NA	1.8	1.4	1.7	1.2	0.8
165	NA	NA	NA	1.9	1.4	1.1	1.2	0.8
175	NA	NA	NA	1.9	1.4	1.7	1.2	0.8
185	NA	NA	NA	1.9	1.4	1.7	1.2	0.8
195	NA	NA	NA	1.8	1.5	1.6	1.2	0.8
210	NA	NA	NA	1.9	1.4	1.6	1.2	0.8

DEFLECTION IN INCHES BASED ON HEADER SELECTION
Pd- DESIGNED PRESSURE IN PSF
SHUTTER SPAN IN INCHES

1/8 2X5 STORM BAR

HEADER SELECTION
2 SPANS SHUTTER

	SHUTTER SPAN							
Pd	84	78	72	66	60	54	48	42
30	NA	NA	2X6	2X6	2X5	2X5	2X4	2X3
45	NA	NA	NA	2X6	2X6	2X5	2X5	2X4
55	NA	NA	NA	2X6	2X6	2X6	2X5	2X5
65	NA	NA	NA	2X6	2X6	2X6	2X5	2X5
75	NA	NA	2X6	2X6	2X6	2X6	2X5	2X5
85	NA	NA	2X6	2X6	2X6	2X5	2X5	2X5
95	NA	NA	NA	2X6	2X6	2X6	2X5	2X5
105	NA	NA	2X6	2X6	2X6	2X6	2X5	2X5
115	NA	NA	2X6	2X6	2X6	2X6	2X5	2X5
125	NA	NA	2X6	2X6	2X6	2X5	2X5	2X5
135	NA	NA	2X6	2X6	2X6	2X5	2X5	2X5
145	NA	NA	2X6	2X6	2X6	2X5	2X5	2X5
155	NA	NA	NA	2X6	2X6	2X6	2X5	2X5
165	NA	NA	2X6	2X6	2X6	2X6	2X5	2X5
175	NA	NA	2X6	2X6	2X6	2X5	2X5	2X5
185	NA	NA	NA	2X6	2X6	2X5	2X5	2X5
195	NA	NA	NA	2X6	2X6	2X5	2X5	2X5
210	NA	NA	2X6	2X6	2X6	2X5	2X5	2X5

HEADER SELECTION
3 SPANS SHUTTER

	SHUTTER SPAN							
Pd	84	78	72	66	60	54	48	42
30	NA	NA	NA	2X6	2X6	2X6	2X5	2X5
45	NA	NA	NA	2X6	2X6	2X5	2X5	2X5
55	NA	NA	NA	2X6	2X6	2X6	2X5	2X5
65	NA	NA	NA	2X6	2X6	2X5	2X5	2X5
75	NA	NA	NA	2X6	2X6	2X5	2X5	2X5
85	NA	NA	NA	2X6	2X6	2X6	2X5	2X5
95	NA	NA	NA	2X6	2X6	2X5	2X5	2X5
105	NA	NA	NA	2X6	2X6	2X5	2X5	2X5
115	NA	NA	NA	2X6	2X6	2X5	2X5	2X5
125	NA	NA	NA	2X6	2X6	2X5	2X5	2X5
135	NA	NA	NA	2X6	2X6	2X5	2X5	2X5
145	NA	NA	NA	2X6	2X6	2X5	2X5	2X5
155	NA	NA	NA	2X6	2X6	2X5	2X5	2X5
165	NA	NA	NA	2X6	2X6	2X6	2X5	2X5
175	NA	NA	NA	2X6	2X6	2X5	2X5	2X5
185	NA	NA	NA	2X6	2X6	2X5	2X5	2X5
195	NA	NA	NA	2X6	2X6	2X5	2X5	2X5
210	NA	NA	NA	2X6	2X6	2X5	2X5	2X5

MAXIMUM HEADER DEFLECTION
2 SPANS SHUTTER

	SHUTTER SPAN							
Pd	84	78	72	66	60	54	48	42
30	NA	NA	0.8	0.6	0.6	0.4	0.5	0.6
45	NA	NA	NA	0.7	0.5	0.6	0.4	0.4
55	NA	NA	NA	0.7	0.5	0.4	0.4	0.3
65	NA	NA	NA	0.7	0.5	0.4	0.4	0.3
75	NA	NA	0.9	0.7	0.5	0.4	0.4	0.3
85	NA	NA	0.9	0.7	0.5	0.6	0.4	0.3
95	NA	NA	NA	0.7	0.5	0.4	0.4	0.3
105	NA	NA	0.9	0.7	0.5	0.4	0.4	0.3
115	NA	NA	0.9	0.7	0.5	0.4	0.4	0.3
125	NA	NA	0.9	0.7	0.5	0.6	0.4	0.3
135	NA	NA	0.9	0.7	0.5	0.6	0.4	0.3
145	NA	NA	0.9	0.7	0.5	0.6	0.4	0.3
155	NA	NA	NA	0.7	0.5	0.4	0.4	0.3
165	NA	NA	0.9	0.7	0.5	0.4	0.4	0.3
175	NA	NA	0.9	0.7	0.5	0.6	0.4	0.3
185	NA	NA	NA	0.7	0.5	0.6	0.4	0.3
195	NA	NA	NA	0.6	0.5	0.6	0.4	0.3
210	NA	NA	0.8	0.7	0.5	0.6	0.4	0.3

MAXIMUM HEADER DEFLECTION
3 SPANS SHUTTER

	SHUTTER SPAN							
Pd	84	78	72	66	60	54	48	42
30	NA	NA	NA	1.9	1.4	1.1	1.2	0.8
45	NA	NA	NA	1.9	1.4	1.7	1.2	0.8
55	NA	NA	NA	1.9	1.4	1.1	1.2	0.8
65	NA	NA	NA	1.9	1.5	1.7	1.2	0.8
75	NA	NA	NA	1.9	1.4	1.7	1.2	0.8
85	NA	NA	NA	1.9	1.4	1.1	1.2	0.8
95	NA	NA	NA	1.9	1.4	1.6	1.2	0.8
105	NA	NA	NA	1.9	1.4	1.6	1.2	0.8
115	NA	NA	NA	1.9	1.4	1.7	1.2	0.8
125	NA	NA	NA	1.9	1.4	1.6	1.2	0.8
135	NA	NA	NA	1.9	1.4	1.6	1.2	0.8
145	NA	NA	NA	1.8	1.4	1.6	1.1	0.8
155	NA	NA	NA	1.8	1.4	1.7	1.2	0.8
165	NA	NA	NA	1.9	1.4	1.1	1.2	0.8
175	NA	NA	NA	1.9	1.4	1.7	1.2	0.8
185	NA	NA	NA	1.9	1.4	1.7	1.2	0.8
195	NA	NA	NA	1.8	1.5	1.6	1.2	0.8
210	NA	NA	NA	1.9	1.4	1.6	1.2	0.8

DEFLECTION IN INCHES BASED ON HEADER SELECTION
Pd- DESIGNED PRESSURE IN PSF
SHUTTER SPAN IN INCHES

NOTE: HEADER SELECTION AND DEFLECTION ARE CONTROLLED BY THE MAXIMUM ALLOWABLE STORM BARS HEIGHT TABLES ON SHEETS 5 AND 6

PRODUCT RENEWED
as complying with the Florida Building Code
Acceptance No. 08-0408.02
Expiration Date 04/10/13
By M Thab
Miami Dade Product Control Division

MANUFACTURER:
Roller Star USA
1480 SW 6th COURT
BUILDING #1400
POMPANO BEACH
FLORIDA - 33069
TEL: (954) 972-4772
FAX: (954) 917-7392

Product:
RE1500
EXTRUDED ALUMINUM ROLL SHUTTERS

Engineering:
EngCo Inc.
CA 8116
6971 W. Sunrise Blvd. 104
Plantation, Fl. 33313
Tel.: (954) 585-0304

FEB 27 2007
Engineer Seal
Pedro De Figueiredo
PE 52609

Date: 2/26/07
Scale: NA
Design by: PPMF

Dade County NOA:
05-0804.01
04/10/08
M Thab
Miami-Dade Product Control Division

Drawing Number
05-185R1

ANCHOR SCHEDULE

Type	Description	Embed.	Substract	Manufacturer
A	1/4" Tapcon	1 3/4"	Concrete	Elco
B	1/4" Tapcon	1 1/4"	Hollow Block	Elco
C	#14 SS Wood Screws	2"	Wood (SG=.55)	Elco

EDGE DISTANCE =3"

ANCHORAGE NOTE: HEADER ANCHORAGE IS CONTROLLED BY THE MAXIMUM ALLOWABLE STORM BARS HEIGHT TABLES ON SHEETS 5 AND 6

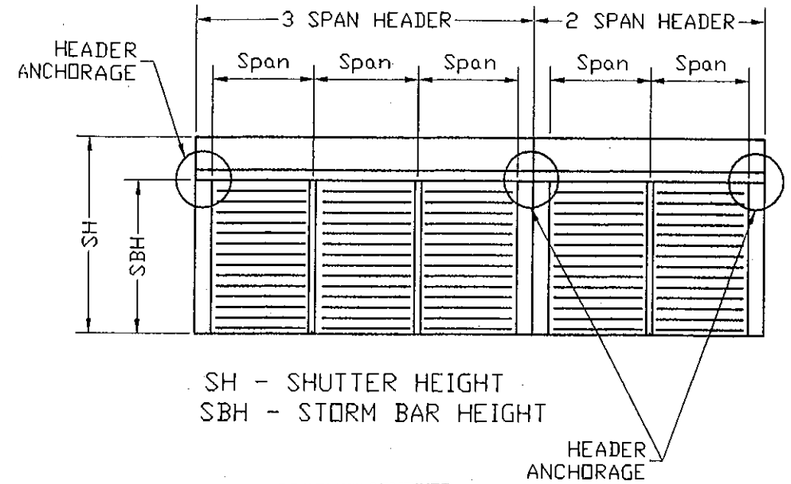

PRODUCT RENEWED
as complying with the Florida
Building Code
Acceptance No 08-0408.02
Expiration Date 04/10/13
By M Thank
Miami Dade Product Control
Division

HEADER ANCHORAGE INTO MULLION TUBE

NOTE: INSIDE HEADER IS OPTIONAL, INSIDE STORM BARS CAN BE ANCHORED TO CEILING OR WALL.

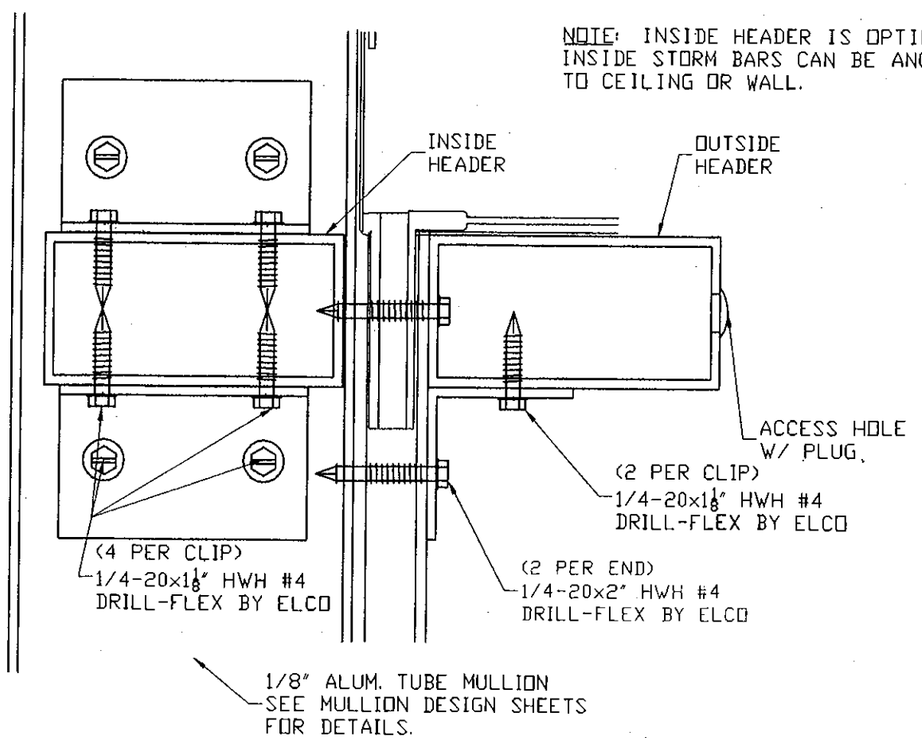

HEADER ANCHORAGE INTO BUILT-OUT ALUM. TUBE

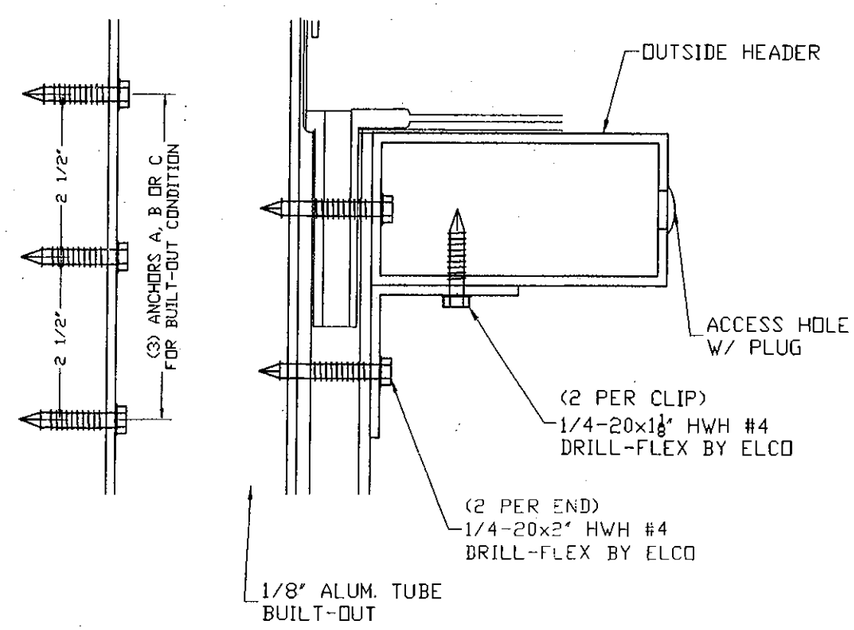

MANUFACTURER:
Roller Star USA
1480 SW 6th COURT
BUILDING #1400
POMPANO BEACH
FLORIDA - 33069
TEL: (954) 972-4772
FAX: (954) 917-7392

Product:
RE1500
EXTRUDED ALUMINUM ROLL SHUTTERS

Engineering:
EngCo Inc.
CA 8116
6971 W. Sunrise Blvd. 104
Plantation, Fl. 33313
Tel.: (954) 585-0304

FEB 27 2007
Engineer Seal
Pedro De Figueiredo
PE 52609

Date: 2/26/07
Scale: NA
Design by: PPMF

Dade County NOA:
PRODUCT RENEWED
as complying with the Florida
Building Code
Acceptance No 05-0804.01
Expiration Date 04/10/08
By M Thank
Miami Dade Product Control
Division

Drawing Number
05-185R1

MULLION SELECTION TABLES

CASE 1 - MULLION ANCHORED WALL TO WALL OR WALL TO FLOOR

INTERMEDIATE MULLION

	MULLION SPAN							
Pd	120	108	96	84	72	60	48	36
30	2X6	2X6	2X5	2X4	2X4	2X3	2X2	2X2
45	NA	2X6	2X5	2X5	2X4	2X3	2X3	2X2
55	NA	NA	2X6	2X5	2X4	2X3	2X3	2X2
65	NA	NA	2X6	2X5	2X4	2X4	2X3	2X2
75	NA	NA	2X6	2X5	2X4	2X4	2X3	2X2
85	NA	NA	NA	2X6	2X5	2X4	2X3	2X2
95	NA	NA	NA	2X6	2X5	2X4	2X3	2X2
105	NA	NA	NA	2X6	2X5	2X4	2X3	2X2
115	NA	NA	NA	2X6	2X5	2X4	2X3	2X2
125	NA	NA	NA	NA	2X5	2X4	2X3	2X2
135	NA	NA	NA	NA	2X5	2X4	2X3	2X2
145	NA	NA	NA	NA	2X6	2X5	2X3	2X2
155	NA	NA	NA	NA	2X6	2X5	2X4	2X3
165	NA	NA	NA	NA	2X6	2X5	2X4	2X3
175	NA	NA	NA	NA	2X6	2X5	2X4	2X3
185	NA	NA	NA	NA	2X6	2X5	2X4	2X3
195	NA	NA	NA	NA	2X6	2X5	2X4	2X3
210	NA	NA	NA	NA	2X6	2X5	2X4	2X3

END MULLION

	MULLION SPAN							
Pd	120	108	96	84	72	60	48	36
30	2X5	2X4	2X4	2X3	2X3	2X2	2X2	2X2
45	2X5	2X5	2X4	2X4	2X3	2X3	2X2	2X2
55	2X6	2X5	2X4	2X4	2X3	2X3	2X2	2X2
65	2X6	2X5	2X5	2X4	2X3	2X3	2X2	2X2
75	2X6	2X5	2X5	2X4	2X4	2X3	2X2	2X2
85	2X6	2X6	2X5	2X4	2X4	2X3	2X2	2X2
95	2X6	2X6	2X5	2X4	2X4	2X3	2X2	2X2
105	NA	2X6	2X5	2X4	2X4	2X3	2X2	2X2
115	NA	2X6	2X5	2X5	2X4	2X3	2X3	2X2
125	NA	2X6	2X5	2X5	2X4	2X3	2X3	2X2
135	NA	2X6	2X5	2X5	2X4	2X3	2X3	2X2
145	NA	2X6	2X5	2X5	2X4	2X3	2X3	2X2
155	NA	2X6	2X6	2X5	2X4	2X3	2X3	2X2
165	NA	NA	2X6	2X5	2X4	2X3	2X3	2X2
175	NA	NA	2X6	2X5	2X4	2X3	2X3	2X2
185	NA	NA	2X6	2X5	2X4	2X3	2X3	2X2
195	NA	NA	2X6	2X5	2X4	2X3	2X3	2X2
210	NA	NA	2X6	2X5	2X4	2X3	2X3	2X2

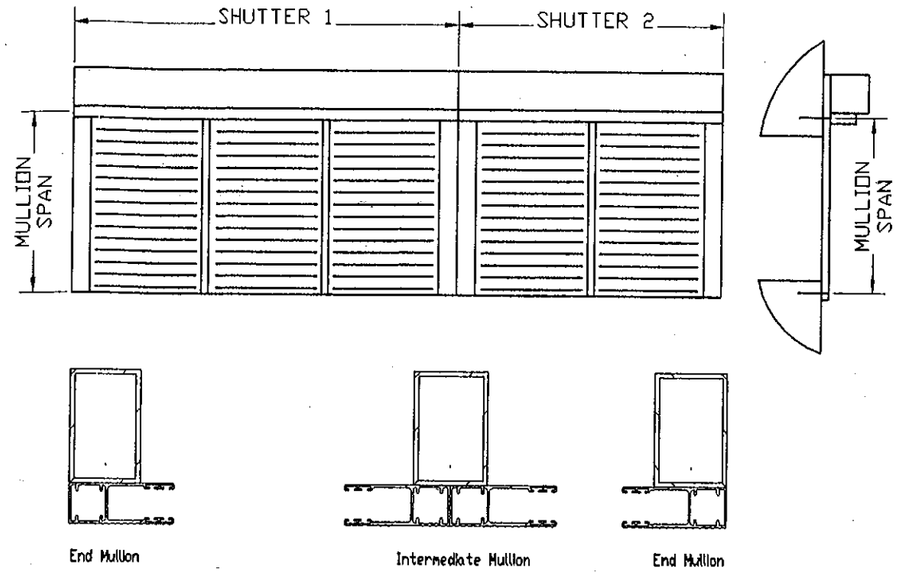

NOTE: MULLION TABLES ARE CONTROLLED BY THE SPAN VS PRESSURE TABLES ON SHEET 3

CASE 2 - MULLION ANCHORED FLOOR TO CEILING

INTERMEDIATE MULLION

	MULLION SPAN							
Pd	120	108	96	84	72	60	48	36
30	NA	2X6	2X6	2X5	2X5	2X4	2X4	2X3
45	NA	NA	2X6	2X6	2X5	2X4	2X4	2X3
55	NA	NA	NA	2X6	2X5	2X5	2X4	2X3
65	NA	NA	NA	2X6	2X5	2X5	2X4	2X3
75	NA	NA	NA	NA	2X6	2X5	2X4	2X4
85	NA	NA	NA	NA	2X6	2X5	2X4	2X4
95	NA	NA	NA	NA	2X6	2X5	2X4	2X4
105	NA	NA	NA	NA	2X6	2X5	2X5	2X4
115	NA	NA	NA	NA	2X6	2X5	2X5	2X4
125	NA	NA	NA	NA	NA	2X6	2X5	2X4
135	NA	NA	NA	NA	NA	2X6	2X5	2X4
145	NA	NA	NA	NA	NA	2X6	2X5	2X4
155	NA	NA	NA	NA	NA	2X6	2X5	2X4
165	NA	NA	NA	NA	NA	2X6	2X5	2X4
175	NA	NA	NA	NA	NA	2X6	2X5	2X4
185	NA	NA	NA	NA	NA	2X6	2X5	2X4
195	NA	NA	NA	NA	NA	2X6	2X5	2X4
210	NA	NA	NA	NA	NA	2X6	2X5	2X4

.END MULLION

	MULLION SPAN							
Pd	120	108	96	84	72	60	48	36
30	2X5	2X5	2X4	2X4	2X3	2X3	2X3	2X2
45	2X6	2X5	2X5	2X4	2X4	2X3	2X3	2X2
55	2X6	2X5	2X5	2X4	2X4	2X3	2X3	2X2
65	2X6	2X6	2X5	2X4	2X4	2X3	2X3	2X2
75	2X6	2X6	2X5	2X5	2X4	2X3	2X3	2X2
85	2X6	2X6	2X5	2X5	2X4	2X3	2X3	2X2
95	NA	2X6	2X5	2X5	2X4	2X3	2X3	2X2
105	NA	2X6	2X6	2X5	2X4	2X4	2X3	2X2
115	NA	2X6	2X6	2X5	2X4	2X4	2X3	2X2
125	NA	2X6	2X6	2X5	2X4	2X4	2X3	2X3
135	NA	NA	2X6	2X5	2X4	2X4	2X3	2X3
145	NA	NA	2X6	2X5	2X4	2X4	2X3	2X3
155	NA	NA	2X6	2X5	2X5	2X4	2X3	2X3
165	NA	NA	2X6	2X6	2X5	2X4	2X3	2X3
175	NA	NA	2X6	2X6	2X5	2X4	2X3	2X3
185	NA	NA	2X6	2X6	2X5	2X4	2X3	2X3
195	NA	NA	2X6	2X6	2X5	2X4	2X3	2X3
210	NA	NA	2X6	2X6	2X5	2X4	2X3	2X3

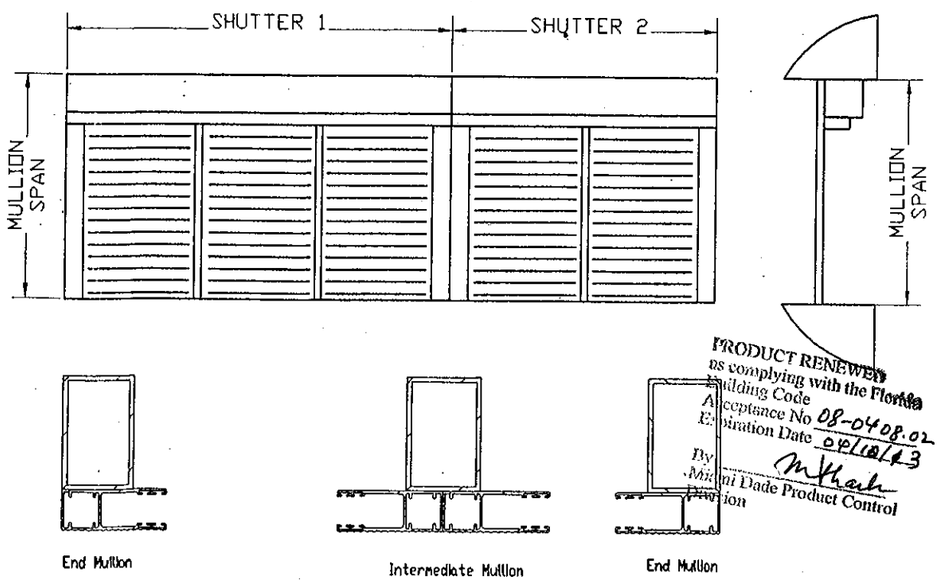

PRODUCT RENEWED
as complying with the Florida
Building Code
Acceptance No 08-0408.02
Expiration Date 04/10/13
By
Miami Dade Product Control
Division

MANUFACTURER:
Roller Star USA
1480 SW 6th COURT
BUILDING #1400
POMPANO BEACH
FLORIDA - 33069
TEL: (954) 972-4772
FAX: (954) 917-7392

Product:
RE1500
EXTRUDED ALUMINUM
ROLL SHUTTERS

Engineering:
EngCo Inc.
CA 8116
6971 W. Sunrise Blvd. 104
Plantation, Fl. 33313
Tel.: (954) 585-0304

FEB 27 2007

Engineer Seal
Pedro De Figueiredo
PE 52609

Date: 2/26/07
Scale: NA
Design by: PPMF

Dade County NOA:
05-0804.4
04/10/08
Miami Dade Product Control
Division

Drawing Number
05-185R1

MULLION ANCHORAGE TABLES
ALLOWABLE DESIGN LOAD – Pd (Psf)

TABLE 1
Mullion Anchored to Clip
Allowable Loads PSF

	# OF ANCHORS D	
AREA	2	3
10	113	170
15	75	113
20	56	85
25	45	68
30	37	56
35	32	48
40	NA	42
45	NA	37

NOTES:
1- END MULLION: USE ONE CLIP WITH 2 OR 3 ANCHORS TYPE D.
2- INTERMEDIATE MULLION: USE TWO CLIPS WITH 4 OR 6 ANCHORS TYPE D.
3- AREA: SEE FIGURE 1 TO CALCULATE AREA

FIGURE 1
Area Calculation

AREA = Ms X SPAN (SQF)
Ms= MULLION SPAN (Ft)
SPAN= SHUTTER SPAN (Ft)
AREA END MULLION 1 = Ms X SPAN 1
AREA END MULLION 2 = Ms X SPAN 2
AREA INTERM. MULL 3 = Ms X SPAN (SPAN=GREATER OF SPAN 1 AND 2)

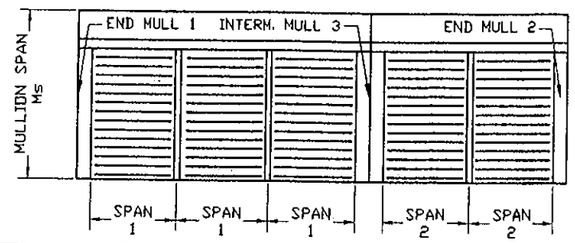

TABLE 3
Mullion Anchored to Floor/Ceiling
Allowable Loads PSF

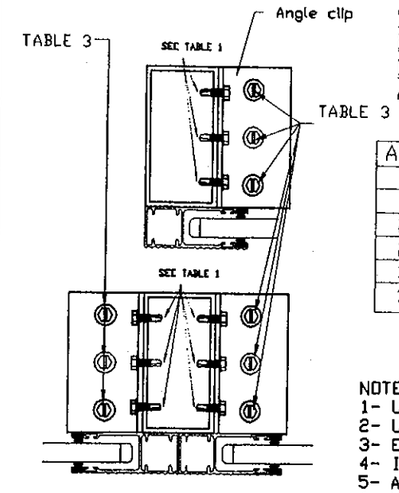

	CLIP SIZE				
AREA	2	3	4	5	6
10	32	51	70	87	119
15	NA	34	47	58	79
20	NA	NA	35	43	59
25	NA	NA	NA	34	47
30	NA	NA	NA	NA	39
35	NA	NA	NA	NA	34

NOTES:
1- USE 2 ANCHORS FOR 2'/3'/4' CLIPS
2- USE 3 ANCHORS FOR 5'/6' CLIPS
3- END MULLION: USE ONE CLIP
4- INTERMEDIATE MULLIONS: USE TWO CLIPS
5- AREA: SEE FIGURE 1 TO CALCULATE AREA
6- USE ANCHOR TYPE A

TABLE 5 – WALL MOUNT
Mullion Anchored to Wall
Allowable Loads PSF

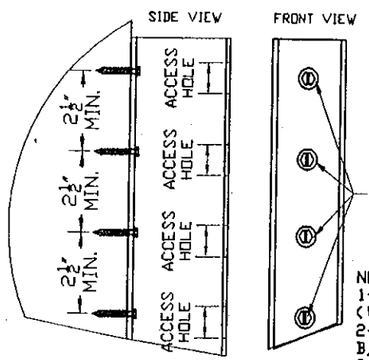

END MULLION
WALL MOUNT (W/OUT CLIP)

	3 ANCHORS		
AREA	A	B	C
10	210	116	210
15	171	77	175
20	128	58	177
25	103	46	133
30	85	38	106
35	73	33	88
40	64	NA	66
45	57	NA	59

NOTE:
1- END MULLIONS - 4 ANCHORS TYPE A, B OR C (WITHOUT OR WITH 1 CLIP)
2- INTERMEDIATE MULLIONS - 8 ANCHORS TYPE A, B, OR C (WITH 2 CLIPS)
3- AREA: SEE FIGURE 1 TO CALCULATE AREA

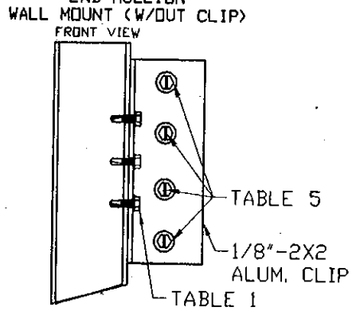

END MULLION
WALL MOUNT (W/ CLIP)

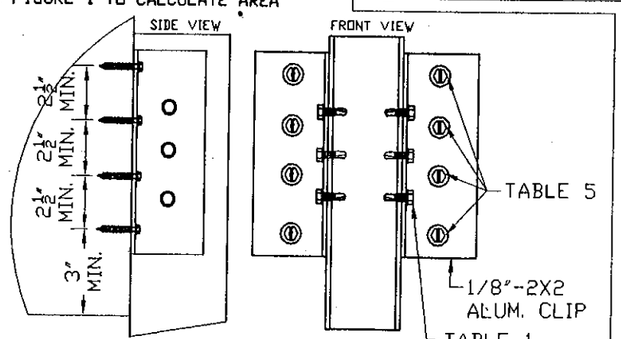

INTERMEDIATE MULLION
WALL MOUNT

TABLE 2
ANGLE OR TUBE – BUILT-OUT MOUNT
Allowable Loads PSF

	ANCHORS	
AREA	A/C	B
10	128	58
15	85	38
20	64	NA
25	51	NA
30	42	NA
35	36	NA
40	32	NA

NOTES:
1- CONCRETE/WOOD WALLS (ANCHOR TYPE A OR C)
END MULL: USE 4 ANCHORS
INTERM. MULLIONS: USE 8 ANCHORS
2- HOLLOW BLOCK WALLS (ANCHOR TYPE B)
END MULL: USE 4 ANCHORS
INTERM. MULLIONS: USE 8 ANCHORS
3- AREA: SEE FIGURE 1 TO CALCULATE AREA

TABLE 4
Mullion Anchored to Built Out
Allowable Loads PSF

	#12-14x7/8" Drill-Flex Anchor				
AREA	2	3	4	5	6
10	36	49	72	82	91
15	NA	33	48	55	60
20	NA	NA	36	41	45
25	NA	NA	NA	33	36
30	NA	NA	NA	NA	30

NOTES:
1- USE 2 ANCHORS FOR 2' or 3' CLIPS
2- USE 3 ANCHORS FOR 4', 5' or 6' CLIPS
3- END MULLION: USE ONE CLIP
4- INTERMEDIATE MULLIONS: USE TWO CLIPS
5- AREA: SEE FIGURE 1 TO CALCULATE AREA

PRODUCT RENEWED
as complying with the Florida Building Code
Acceptance No 08-0408.02
Expiration Date 04/10/13
By
Miami Dade Product Control Division

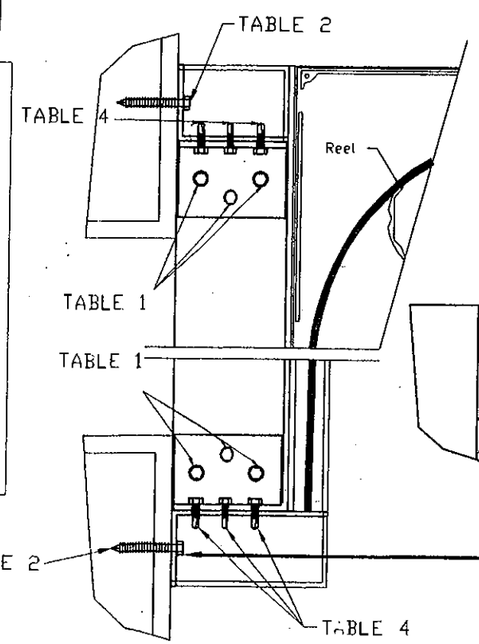

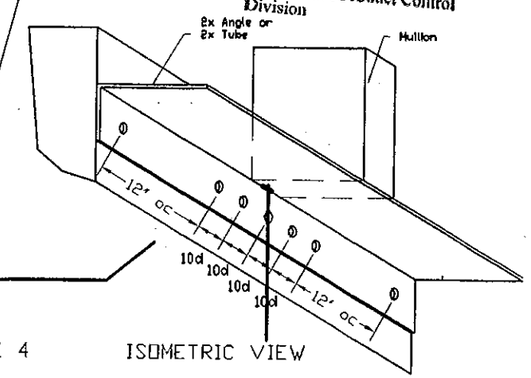

ISOMETRIC VIEW

ANCHOR SCHEDULE

Type	Description	Embed.	Substract	Manufacturer
A	1/4" Tapcon	1 3/4"	Concrete	Elco
B	1/4" Tapcon	1 1/4"	Hollow Block	Elco
C	#14 SS Wood Screws	2"	Wood (SG=.55)	Elco
D	#12-14x7/8" Drill-Flex	1/8	Aluminum	Elco

EDGE DISTANCE =3"

MANUFACTURER:
Roller Star USA
1480 SW 6th COURT
BUILDING #1400
POMPANO BEACH
FLORIDA - 33069
TEL: (954) 972-4772
FAX: (954) 917-7392

Product:
RE1500
EXTRUDED ALUMINUM ROLL SHUTTERS

Engineering:
EngCo Inc.
CA 8116
6971 W. Sunrise Blvd. 104
Plantation, Fl. 33313
Tel.: (954) 585-0304

FEB 27 2007
Engineer Seal
Pedro De Figueiredo
PE 52609

Date: 2/26/07
Scale: NA
Design by: PPMF

Dade County NOA:
PRODUCT RENEWED
as complying with the Florida Building Code
Acceptance No 05-0804.01
Expiration Date 04/10/08
By
Miami Dade Product Control Division

Drawing Number
05-185R1

HOOD ASSEMBLY

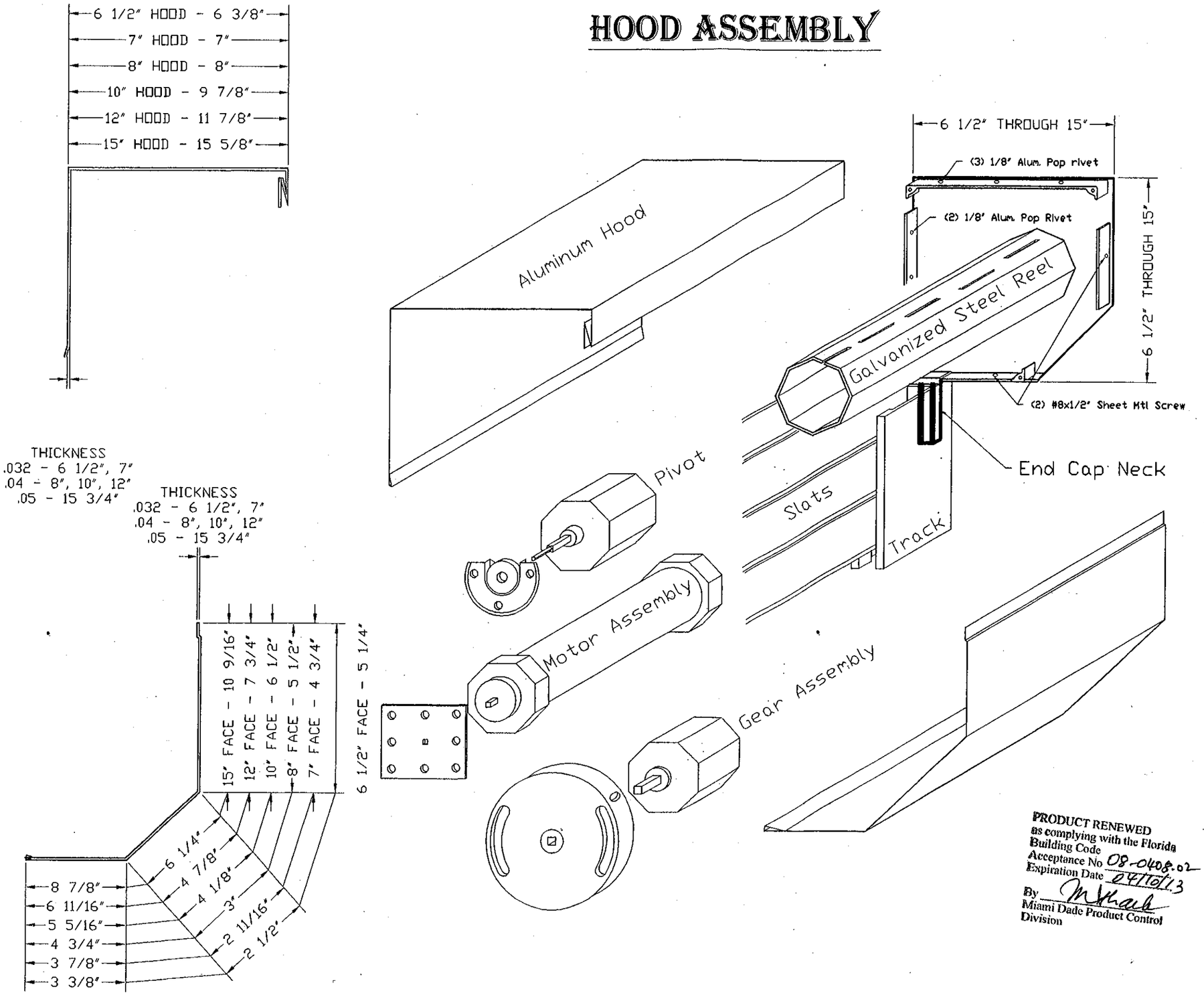

PRODUCT RENEWED
as complying with the Florida Building Code
Acceptance No 08-0408.02
Expiration Date 04/10/13
By M Khalil
Miami Dade Product Control Division

MANUFACTURER:
Roller Star USA
1480 SW 6th COURT
BUILDING #1400
POMPANO BEACH
FLORIDA - 33069
TEL: (954) 972-4772
FAX: (954) 917-7392

Product:
RE1500
EXTRUDED ALUMINUM ROLL SHUTTERS

Engineering:
EngCo Inc.
CA 8116
6971 W. Sunrise Blvd. 104
Plantation, Fl. 33313
Tel.: (954) 585-0304

FEB 27 2007
Engineer Seal
Pedro De Figueiredo
PE 52609

Date: 2/26/07
Scale: NA
Design by: PPMF

Dade County NOA:
05-0804.01
04/10/08

Drawing Number
05-185R1

SLATS DEFLECTION TABLES

GUI*S24 GUIDE RAILS

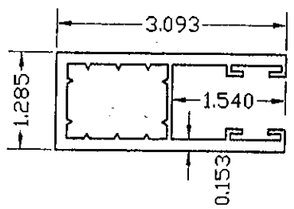

TABLE 14.1
SLAT DEFLECTION FOR 2 SPAN SHUTTERS

	SHUTTER SPAN							
Pd	84	78	72	66	60	54	48	40
30	1.18	0.88	0.64	0.45	0.31	0.20	0.13	0.06
45	1.77	1.32	0.96	0.67	0.46	0.30	0.19	0.09
55	na	1.61	1.17	0.82	0.56	0.37	0.23	0.11
65	na	1.90	1.38	0.97	0.67	0.44	0.27	0.13
75	na	na	1.59	1.12	0.77	0.50	0.31	0.15
85	na	na	1.80	1.27	0.87	0.57	0.36	0.17
95	na	na	na	1.42	0.97	0.64	0.40	0.19
105	na	na	na	1.57	1.08	0.71	0.44	0.21
115	na	na	na	1.72	1.18	0.77	0.48	0.23
125	na	na	na	1.87	1.28	0.84	0.52	0.25
135	na	na	na	na	1.38	0.91	0.57	0.27
145	na	na	na	na	1.48	0.97	0.61	0.29
155	na	na	na	na	1.59	1.04	0.65	0.31
165	na	na	na	na	1.69	1.11	0.69	0.33
175	na	na	na	na	1.79	1.18	0.73	0.35
185	na	na	na	na	1.89	1.24	0.78	0.37
195	na	na	na	na	2.00	1.31	0.82	0.39
210	na	na	na	na	na	1.41	0.88	0.42

Deflections are indicated in inches

TABLE 14.2
SLAT DEFLECTION FOR 3 SPAN SHUTTERS

	SHUTTER SPAN							
Pd	84	78	72	66	60	54	48	40
30	1.51	1.12	0.81	0.57	0.39	0.26	0.16	0.08
45	na	1.68	1.22	0.86	0.59	0.39	0.24	0.12
55	na	na	1.49	1.05	0.72	0.47	0.29	0.14
65	na	na	1.76	1.24	0.85	0.56	0.35	0.17
75	na	na	na	1.44	0.98	0.64	0.40	0.19
85	na	na	na	1.63	1.11	0.73	0.46	0.22
95	na	na	na	1.82	1.24	0.81	0.51	0.25
105	na	na	na	na	1.37	0.90	0.56	0.27
115	na	na	na	na	1.50	0.99	0.62	0.30
125	na	na	na	na	1.63	1.07	0.67	0.32
135	na	na	na	na	1.76	1.16	0.72	0.35
145	na	na	na	na	1.90	1.24	0.78	0.37
155	na	na	na	na	na	1.33	0.83	0.40
165	na	na	na	na	na	1.42	0.88	0.43
175	na	na	na	na	na	1.50	0.94	0.45
185	na	na	na	na	na	1.59	0.99	0.48
195	na	na	na	na	na	1.67	1.04	0.50
210	na	na	na	na	na	na	[illegible]	[illegible]

PRODUCT RENEWED
as complying with the Florida
Building Code
Acceptance No 08-0408.02
Expiration Date 04/10/13
By [signature]
Miami Dade Product Control
Division

GUI*S26 GUIDE RAILS

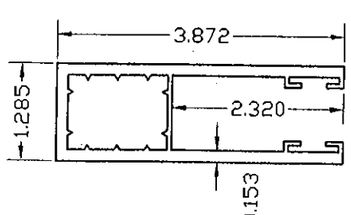

TABLE 14.3
SLAT DEFLECTION FOR 2 SPAN SHUTTERS

	SHUTTER SPAN							
Pd	84	78	72	66	60	54	48	40
30	1.34	0.99	0.72	0.51	0.35	0.23	0.14	0.07
45	na	1.49	1.08	0.76	0.52	0.34	0.21	0.10
55	na	1.82	1.32	0.93	0.64	0.42	0.26	0.13
65	na	na	1.56	1.10	0.75	0.49	0.31	0.15
75	na	na	1.80	1.27	0.87	0.57	0.36	0.17
85	na	na	na	1.44	0.99	0.65	0.40	0.19
95	na	na	na	1.61	1.10	0.72	0.45	0.22
105	na	na	na	1.78	1.22	0.80	0.50	0.24
115	na	na	na	1.95	1.33	0.87	0.55	0.26
125	na	na	na	na	1.45	0.95	0.59	0.29
135	na	na	na	na	1.57	1.03	0.64	0.31
145	na	na	na	na	1.68	1.10	0.69	0.33
155	na	na	na	na	1.80	1.18	0.74	0.35
165	na	na	na	na	1.91	1.26	0.78	0.38
175	na	na	na	na	na	1.33	0.83	0.40
185	na	na	na	na	na	1.41	0.88	0.42
195	na	na	na	na	na	1.48	0.93	0.45
210	na	na	na	na	na	1.60	1.00	0.48

Deflections are indicated in inches

TABLE 14.4
SLAT DEFLECTION FOR 3 SPAN SHUTTERS

	SHUTTER SPAN							
Pd	84	78	72	66	60	54	48	40
30	1.71	1.27	0.92	0.65	0.44	0.29	0.18	0.09
45	na	1.90	1.38	0.98	0.67	0.44	0.27	0.13
55	na	na	1.69	1.19	0.81	0.53	0.33	0.16
65	na	na	1.99	1.41	0.96	0.63	0.39	0.19
75	na	na	na	1.63	1.11	0.73	0.45	0.22
85	na	na	na	1.84	1.26	0.83	0.52	0.25
95	na	na	na	na	1.41	0.92	0.58	0.23
105	na	na	na	na	1.55	1.02	0.64	0.3[illegible]
115	na	na	na	na	1.70	1.12	0.70	0.34
125	na	na	na	na	1.85	1.21	0.76	0.37
135	na	na	na	na	2.00	1.31	0.82	0.39
145	na	na	na	na	na	1.41	0.88	0.42
155	na	na	na	na	na	1.51	0.94	0.45
165	na	na	na	na	na	1.60	1.00	0.48
175	na	na	na	na	na	1.70	1.06	0.5[illegible]
185	na	na	na	na	na	1.80	1.12	0.54
195	na	na	na	na	na	na	1.18	0.57
210	na	na	na	na	na	na	1.27	0.6[illegible]

MANUFACTURER:
Roller Star USA
1480 SW 6th COURT
BUILDING #1400
POMPANO BEACH
FLORIDA - 33069
TEL: (954) 972-4772
FAX: (954) 917-7392

Product:
RE1500
EXTRUDED ALUMINUM
ROLL SHUTTERS

Engineering:
EngCo Inc.
CA 8116
6971 W. Sunrise Blvd. 104
Plantation, Fl. 33313
Tel.: (954) 585-0304

FEB 27 2007

Engineer Seal
Pedro De Figueiredo
PE 52609

Date: 2/26/07
Scale: NA
Design by: PPMF

Dade County NOA:
PRODUCT REVISED
as complying with the Florida
Building Code
Acceptance No 05-0804.01
Expiration Date 04/10/08
By [signature]
Miami Dade Product Control
Division

Drawing Number
05-185R1

CALCULATION EXAMPLES FOR TOTAL SLAT DEFLECTION ON MULTIPLE SPAN SHUTTERS

POSITIVE LOAD

UNIT #	(1) Pd	(2) TT	(3) # SPANS	(4) Span	(5) SLAT DEF(A).	(6) STORM BARS TYPE	(6) STORM BARS SPAN	(6) STORM BARS DEF. (B)	(7) HEADER TYPE	(7) HEADER DEF. (C)	(8) TOTAL DEF. (D) D=A+B/2+C/4	(9) Allowable D<=Span/30 or 2"	(10) GS GS=D+1	TRACK TYPE
1	45	180	3	60	0.59	2X2	56	0.5	2X6	1.4	1.19<	2.0	3"	S24
2	65	96	2	48	0.27	2X4	80	0.5	2X5	0.4	0.62<	1.6	3"	S24
3	30	120	3	40	0.09	2X4	120	0.9	2X5	0.8	0.74<	1.3	3"	S26
4	95	144	3	48	0.58	2X2	33	0.1	NA	0.0	0.63<	1.6	3"	S26
5	45	120	2	60	0.52	2X5	99	0.6	2X6	0.5	0.95<	2.0	3"	S26

PRODUCT RENEWED
as complying with the Florida
Building Code
Acceptance No 08-0408.02
Expiration Date 04/10/13
By
Miami Dade Product Control
Division

NEGATIVE LOAD

UNIT #	(1) Pd	(2) TT	(3) # SPANS	(4) Span	(5) SLAT DEF(A).	(6) STORM BARS TYPE	(6) STORM BARS SPAN	(6) STORM BARS DEF. (B)	(7) HEADER TYPE	(7) HEADER DEF. (C)	(8) TOTAL DEF. (D) D=A+B/2+C/4	(9) Allowable D<=Span/30	TRACK TYPE
1	55	180	3	60	0.72	2X2	46	0.3	2X6	1.4	1.22<	2.0	S24
2	75	96	2	48	0.31	2X4	74	0.4	2X5	0.4	0.61<	1.6	S24
3	45	120	3	40	0.13	2X4	80	0.3	2X5	0.8	0.48<	1.3	S26
4	95	144	3	48	0.58	2X2	33	0.1	2X5	1.2	0.93<	1.6	S26
5	55	120	2	60	0.64	2X5	81	0.3	2X6	0.5	0.92<	2.0	S26

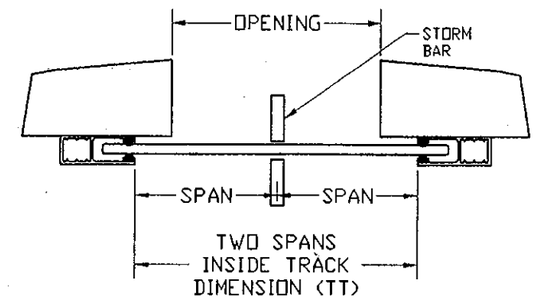

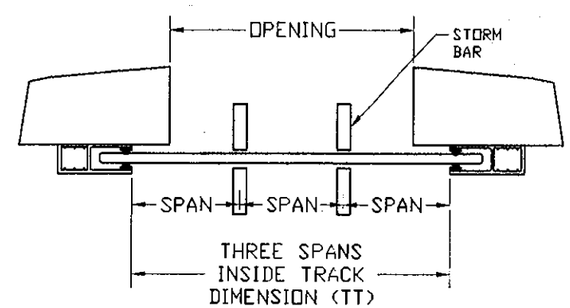

PROCEDURE:
STEP 1: PROVIDE PROJECT DESIGNED PRESSURE IN PSF AS PER ITEM 4 SHEET 1 OF 15. BASED ON ASCE 7-02
STEP 2: PROVIDE TRACK TO TRACK SHUTTER DIMENSION IN INCHES.
STEP 3: PROVIDE NUMBER OF SPANS: 2 FOR ONE SET OF STORM BARS 3 FOR TWO SETS.
STEP 4: CALCULATE THE SPAN SIZE DIVIDING TT/# OF SPANS. THIS VALUE MUST BE LESS OR EQUAL THE CORRESPONDING VALUE OF TABLE 3.1 OR 3.2 ON SHEET 3 OF 15.
STEP 5: CALCULATED SLAT DEFLECTION IN INCHES AS PER TABLES ON SHEET 14 OF 15
STEP 6: SELECT APPROPRIATE STORM BAR TYPE AND CORRESPONDING DEFLECTION ON SHEETS 5 OR 6 OF 15.
STEP 7: (IF APPLICABLE) SELECT APPROPRIATE HEADER TYPE AND CORRESPONDING DEFLECTION ON SHEETS 8 OR 9 OF 15.
STEP 8: CALCULATE TOTAL DEFLECTION
STEP 9: CALCULATE AND COMPARE MAXIMUM ALLOWABLE DEFLECTION. IF TOTAL DEFLECTION EXCEEDS THE ALLOWABLE TRY TO UPGRADE THE STORM BAR UNTIL DESIGN IS ACCEPTABLE.
STEP 10: CALCULATE THE SLAT TO GLASS SEPARATION (POSITIVE ONLY). COMPARE WITH GLASS SEPARATION TABLE.

NOTE: THIS IS A GENERIC EXAMPLE SHEET. FOR SPECIFIC PROJECTS, CONTRACTOR MUST USE ADDITIONAL SHEET AND FOLLOW THE ABOVE GUIDELINES. THE SPECIFIC PROJECT MUST BE VERIFIED BY THE BUILDING OFFICIAL. SITE SPECIFIC ENGINEERING, PROVIDED BY A FLORIDA REGISTERED PROFESSIONAL ENGINEER, MAY BE ACCEPTABLE UPON BUILDING OFFICIAL APPROVAL.

(GS) GLASS SEPARATION:		
LARGE IMPACT	SPAN	WIND LOAD ONLY
3'	SPAN> 52'	3"
2 3/4"	40" <SPAN<=52"	2 3/4"
2 3/8"	SPAN<=40'	2 3/8"

GLASS SEPARATION FOR LARGE MISSILE IMPACT IS APPLICABLE FOR INSTALLATION UP TO 30 FT. OF GRADE DUE TO LARGE MISSILE IMPACT. WIND LOAD GLASS SEPARATION APPLIES TO INSTALLATION ABOVE 30 FT. OF GRADE.

MANUFACTURER:
Roller Star USA
1480 SW 6th COURT
BUILDING #1400
POMPANO BEACH
FLORIDA - 33069
TEL: (954) 972-4772
FAX: (954) 917-7392

Product:
RE1500
EXTRUDED ALUMINUM ROLL SHUTTERS

Engineering:
EngCo Inc.
CA 8116
6971 W. Sunrise Blvd. 104
Plantation, Fl. 33313
Tel.: (954) 585-0304

FEB 27 2007

Engineer Seal
Pedro De Figueiredo
PE 52609

Date: 2/26/07
Scale: NA
Design by: PPMF

Dade County NOA:
PRODUCT REVISED
as complying with the Florida
Building Code
Acceptance No 05-0804.01
Expiration Date 04/10/08
By
Miami Dade Product Control
Division

Drawing Number
05-185R1